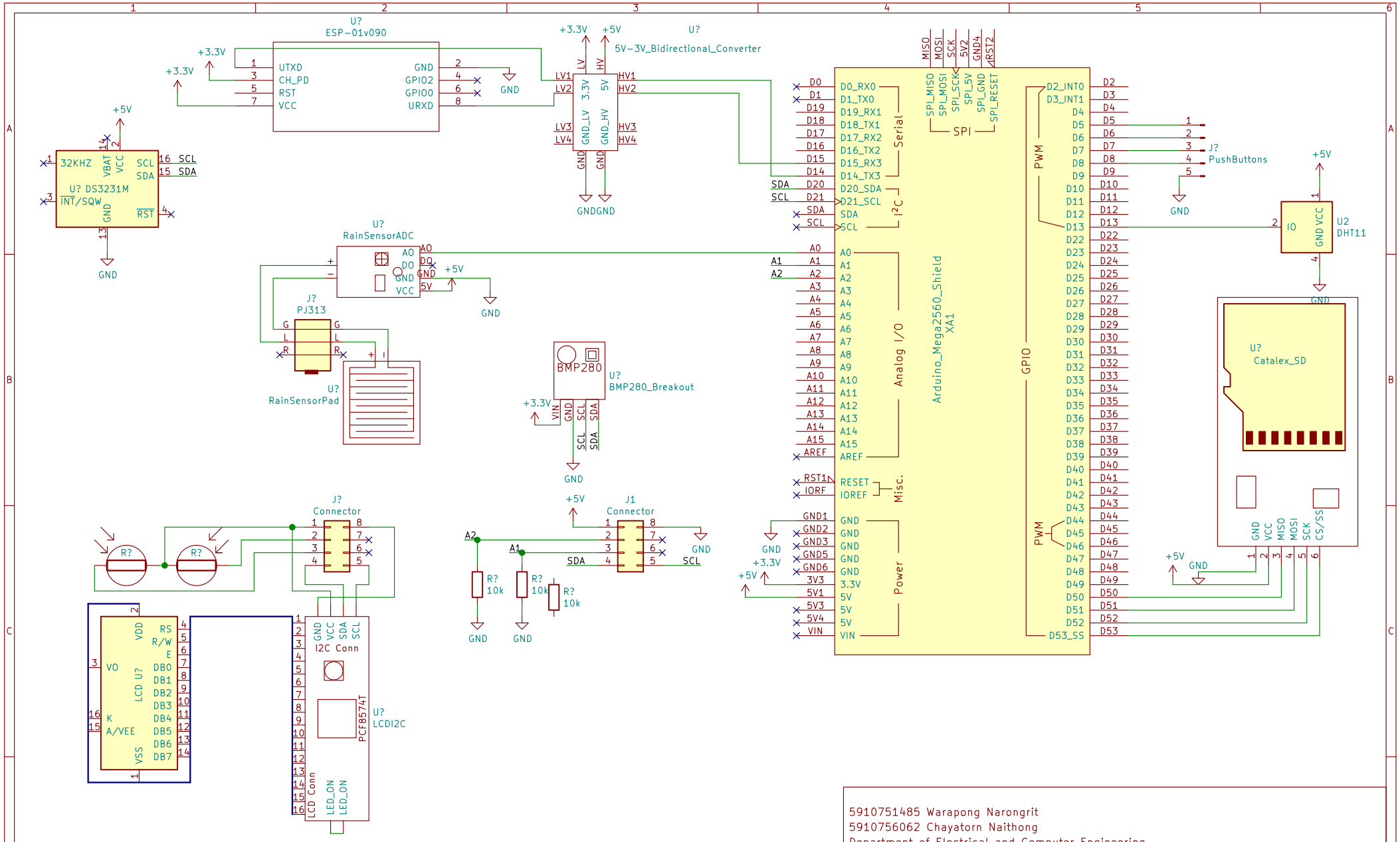

5910751485 Warapong Narongrit
5910756062 Chayatorn Naithong
Department of Electrical and Computer Engineering
Thammasat University

File: Weather.sch Sheet: /

Title: Folk2 Weather Station

Size: A4	Date: 2018-12-05	**Rev: 2**
KiCad E.D.A. kicad (5.0.0)		Id: 1/1