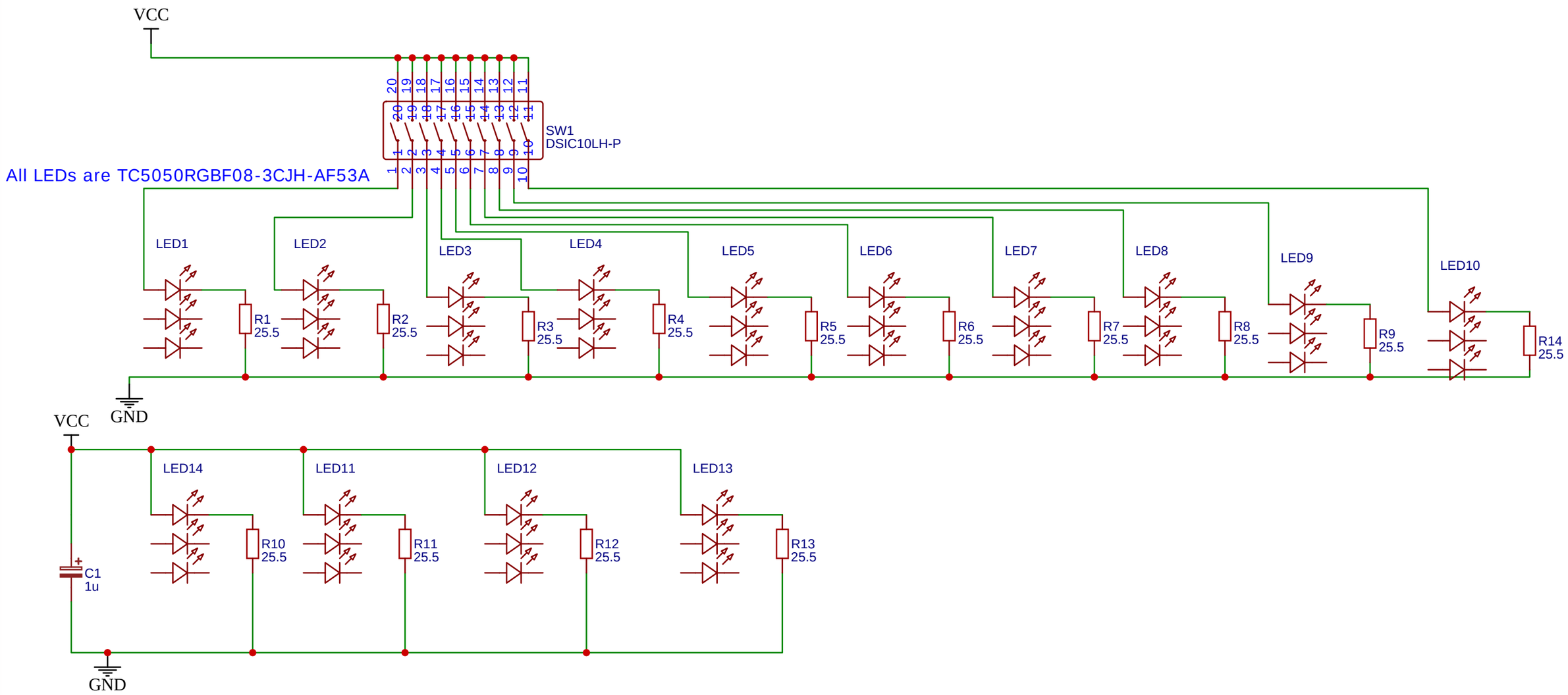

TITLE: DCRC Beacon		REV: 1.0
EasyEDA	Company: Fontys	Sheet: 1/1
	Date: 2021-12-22 Drawn By:	