Name:_____

Library Name:	Zxw_lib
Cell Name:	**Zxw_inv4**

Function/Truth Table:

A	Y
0	1
1	0

Propagation Delay:

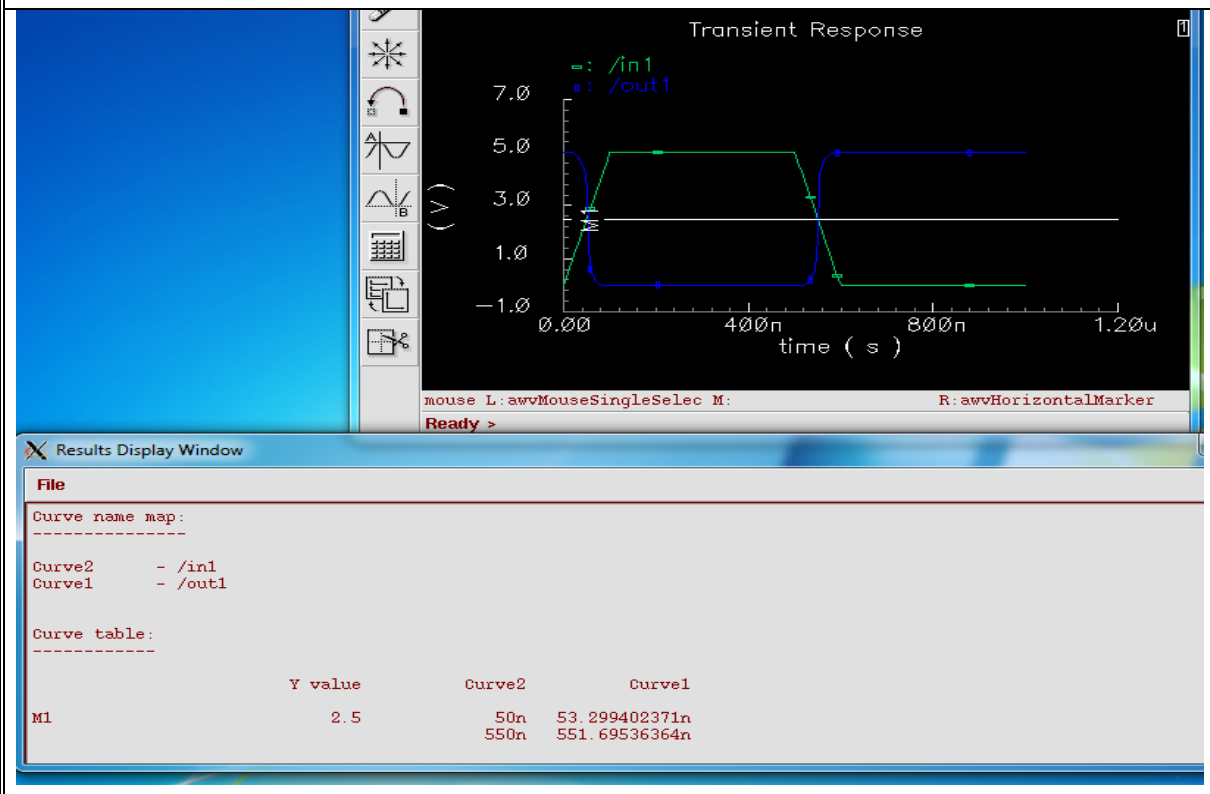

Time delay Y falling 3.2994ns	
Time delay Y rising 1.6953ns	
Layout Area: 374.4	
Symbol with Port Names:	

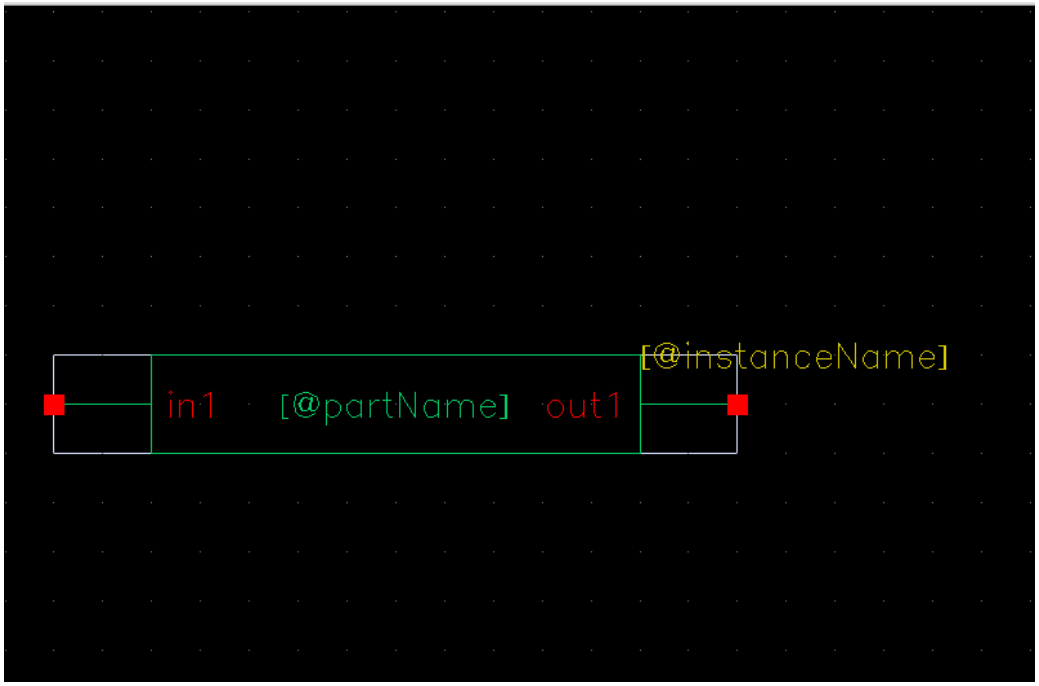

Name:_____

Schematic: s

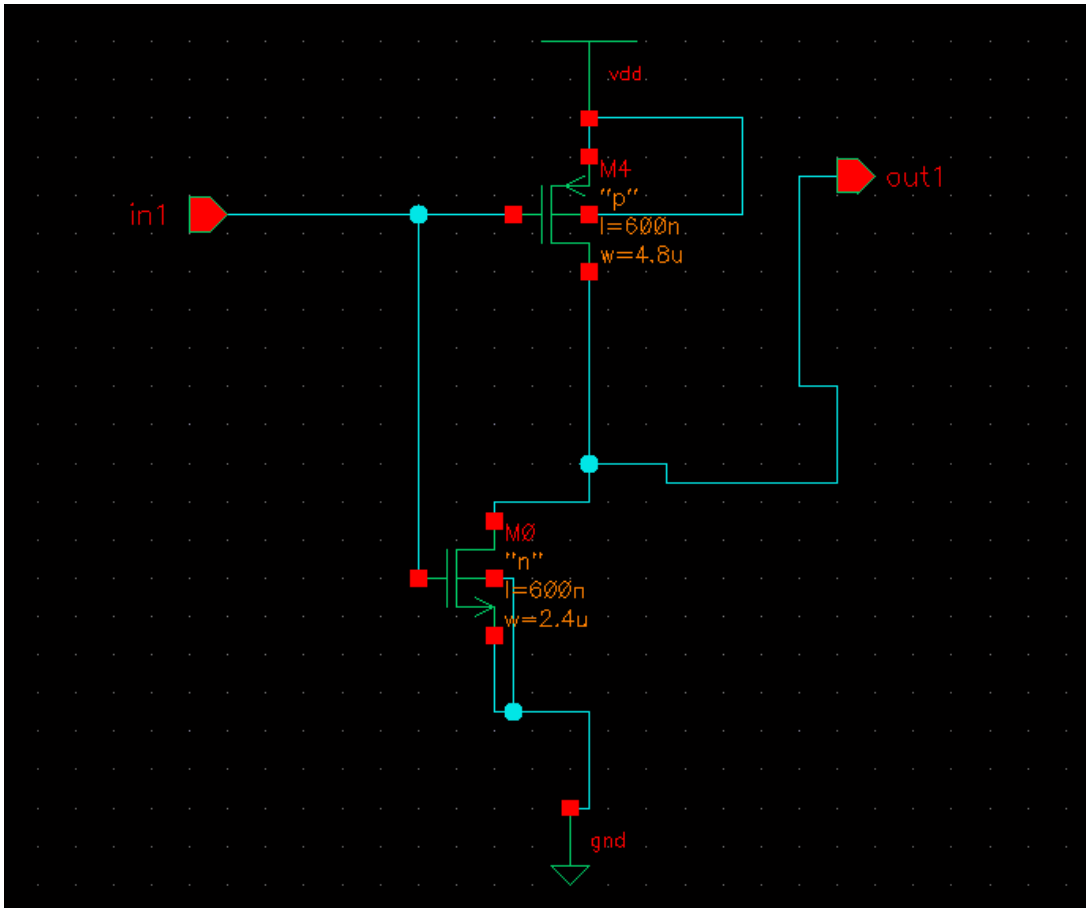

Layout:

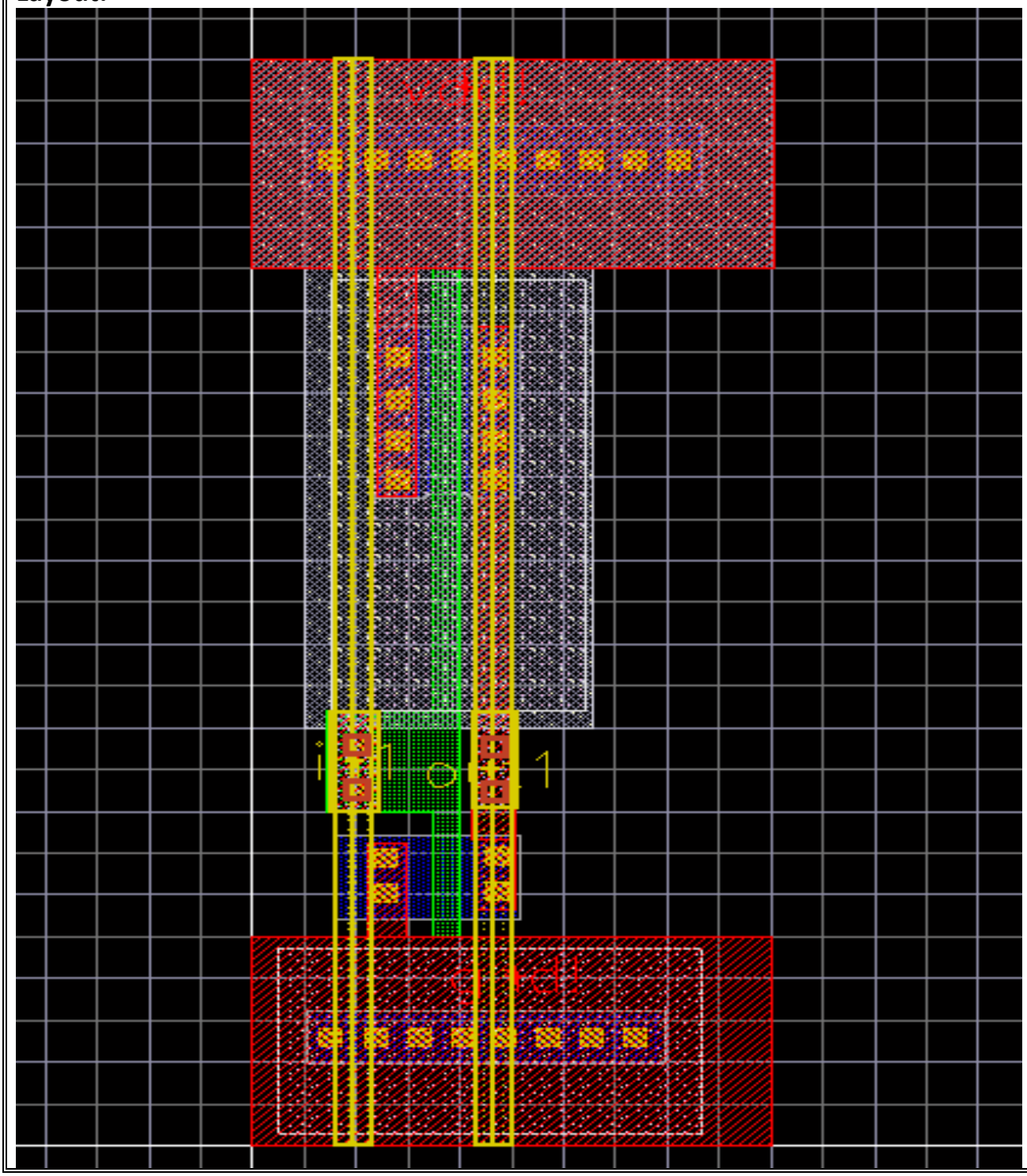

Verilog Model:

```
module zxw_inv4 (in1,out1
);

        input in1;
        output out1;
        not (out1,in1);
endmodule
```

Comments/Notes:

Parasitic delay

```
*                    LINUX          Fri Sep 26 10:46:34 2014
*
*
*
*  PROGRAM  advgen
*
*  CDL LIBRARY
*
*
*

*
.SUBCKT zxw_inv4 vdd! gnd! in1 out1
*
*
*  caps2d version: 7
*
*
*      TRANSISTOR CARDS
*
*
M0      out1#3 in1#6   gnd!#3 gnd!#1 nmos   L=0.6   W=2.4
+ AD=3.36      AS=5.4          PD=5.2          PS=6.9
M4      out1#1 in1#4   vdd!#2 vdd!#1 pmos   L=0.6   W=4.8
+ AD=6.84      AS=6.835        PD=7.8          PS=7.8
*
*
*      RESISTOR AND CAP/DIODE CARDS
*
Re1     in1#4   in1#5     496.3234
```

```
Re2     in1#5   in1#1     18.6207
Re3     in1#5   in1#6    161.3234
Rc1     in1#1   in1#2     20.5000
Rc2     out1#1 out1#2    25.9449
Rc3     out1#2 out1#3    40.2644
Rc4     gnd!    gnd!#2 1.099E-02
Rc5     gnd!#2 gnd!#3    40.2421
Rc6     gnd!#1 gnd!#2    12.5000
Rc7     vdd!#1 vdd!       8.9013
Rc8     vdd!    vdd!#2   25.4731
Rb1     in1     in1#2     0.5000
Rb2     out1#2 out1       1.0000
*
*       CAPACITOR CARDS
*
*
C1      out1    vdd!    6.570E-18
C2      vdd!    in1#4   1.064E-16
C3      vdd!    gnd!#1 6.208E-17
C4      out1#1 vdd!     1.125E-17
C5      vdd!#2 out1#1 1.606E-16
C6      in1#5   gnd!#1 4.697E-16
C7      out1#1 in1#5   6.098E-17
C8      out1    gnd!#1 3.416E-16
C9      in1#1   out1#2 4.400E-17
C10     out1    vdd!#1 3.080E-16
C11     out1    vdd!#2 6.057E-17
C12     gnd!#3 out1#3 4.683E-17
C13     out1#1 in1#4   2.173E-16
C14     out1    gnd!#3 2.745E-17
C15     in1#6   gnd!#1 2.907E-16
C16     vdd!#2 in1#4   1.851E-16
C17     in1#1   gnd!#1 6.694E-16
C18     out1#3 in1#6   5.601E-17
C19     out1#2 gnd!#1 2.468E-16
C20     gnd!#3 in1#6   6.915E-17
C21     gnd!#3 in1#5   1.643E-17
C22     gnd!#3 in1#1   5.672E-17
C23     out1#2 in1#5   2.921E-16
C24     vdd!#1 gnd!#1 2.235E-16
C25     gnd!#1 out1#3 5.096E-17
C26     out1#1 vdd!#1 3.116E-17
C27     in1     gnd!#1 2.087E-16
C28     in1     vdd!#2 1.124E-16
C29     in1     out1#1 4.822E-17
```

```
C30    in1     gnd!#3 3.555E-16
C31    in1     out1   9.123E-16
C32    in1     vdd!   2.222E-16
C33    in1     out1#2 1.111E-16
C34    vdd!    gnd!   1.297E-15
C35    in1     gnd!   5.827E-16
C36    out1    gnd!   5.809E-16
C37    in1#4   gnd!   6.758E-16
C38    in1#1   gnd!   2.666E-16
C39    out1#2  gnd!   2.563E-16
C40    out1#1  gnd!   2.626E-16
C41    vdd!#1  gnd!   1.594E-15
C42    out1#3  gnd!   2.807E-17
C43    vdd!#2  gnd!   7.439E-17
C44    in1#5   gnd!   5.550E-16
*
*
.ENDS zxw_inv4
*
```