Logic Leak

Water Tank Automation and Pentesting

By: Yen Nguyen

Advisor: Valerio Formicola

SUMMARY

Developing a small-scale **Industrial Control System (ICS)** water tank testbed that simulates a real industrial process and allows cybersecurity **penetration testing**.

Technology Used

- Raspberry Pi 4
- Ultrasonic Sensor HC-SR04
- DC motor pumps
- Relay modules
- Mango Automation SCADA (Supervisory Control and Data Acquisition)
- Modbus communication
- Kali Linux

Goal: Demonstrate how cyberattacks can affect physical industrial processes and evaluate security vulnerabilities in ICS environments.

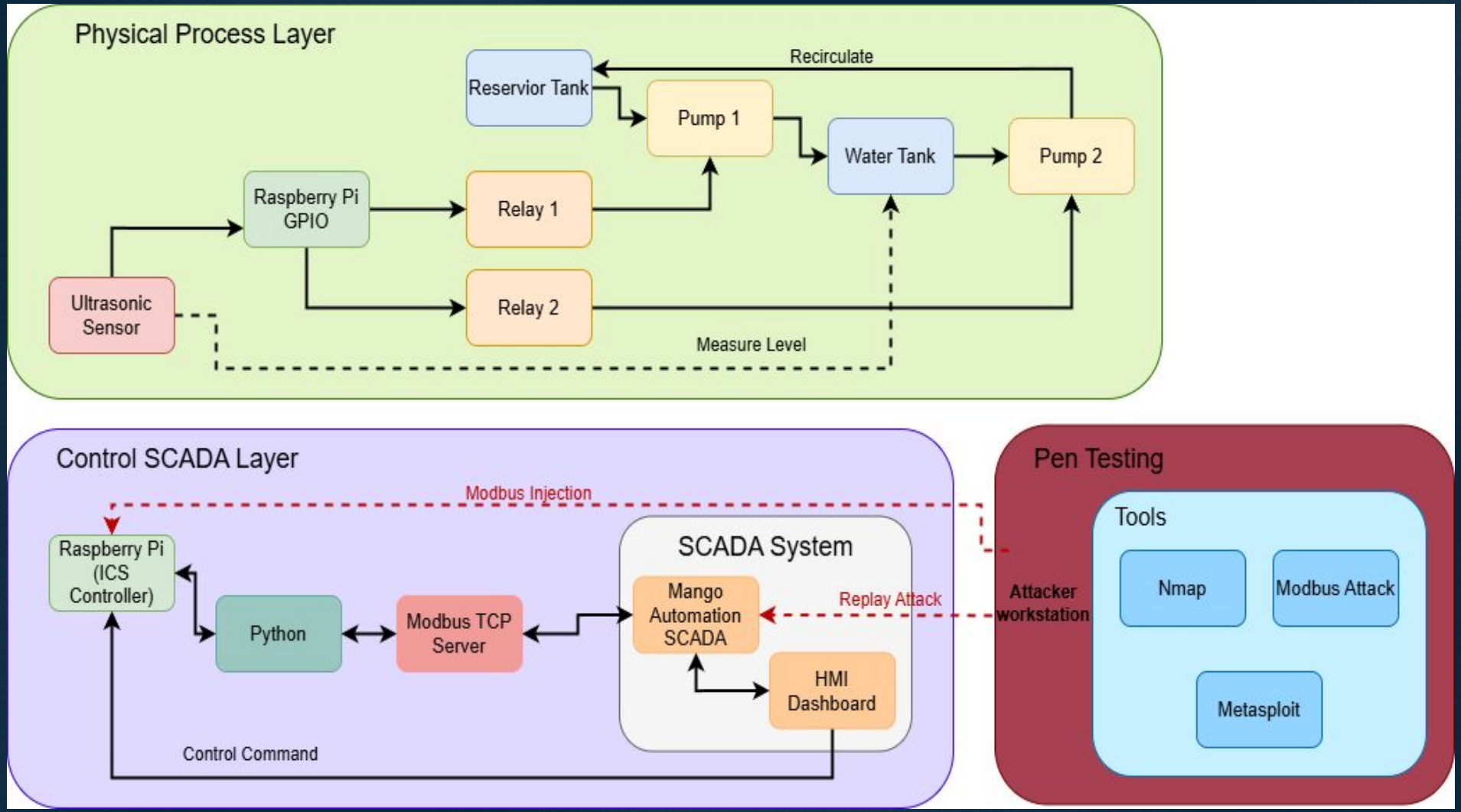
Physical Process Layer
Recirculate
Reservior Tank
Pump 1
Water Tank
Pump 2
Raspberry Pi GPIO
Relay 1
Relay 2
Ultrasonic Sensor
Measure Level
Control SCADA Layer
Modbus Injection
Raspberry Pi (ICS Controller)
Python
Modbus TCP Server
SCADA System
Mango Automation SCADA
HMI Dashboard
Replay Attack
Control Command
Pen Testing
Attacker workstation
Tools
Nmap
Modbus Attack
Metasploit

System Requirements

Functional
- Measure tank water level
- Automatically control pumps
- Send system data to SCADA

Hardware
- Raspberry pi
- Ultrasonic sensor
- DC pumps and relay modules

Communication
- Modbus TCP between controller and SCADA
- Web interface HMI monitoring

Security
- Support penetration testing experiments

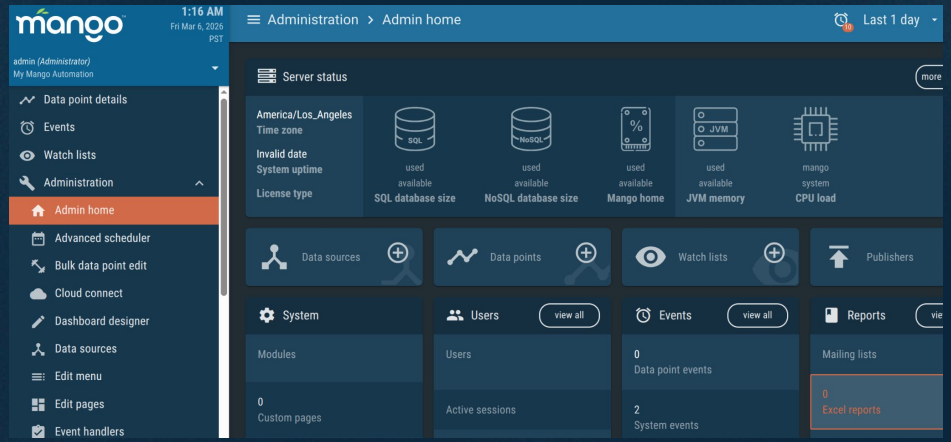

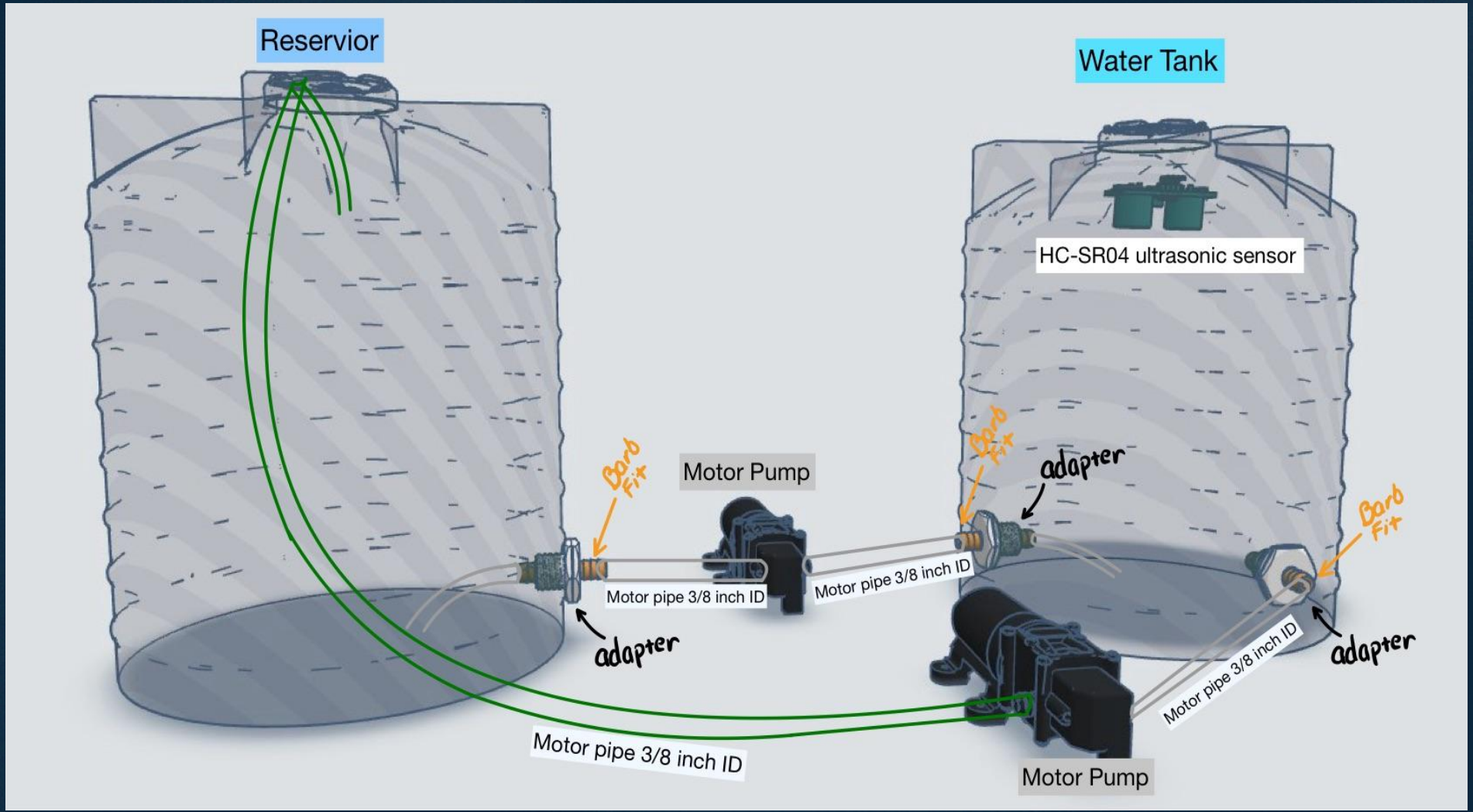
Reservior
Water Tank
HC-SR04 ultrasonic sensor
Motor Pump
Motor pipe 3/8 inch ID
Motor pipe 3/8 inch ID
Motor pipe 3/8 inch ID
Motor pipe 3/8 inch ID
Motor Pump
adapter
adapter
adapter
Bard Fit
Bard Fit
Bard Fit

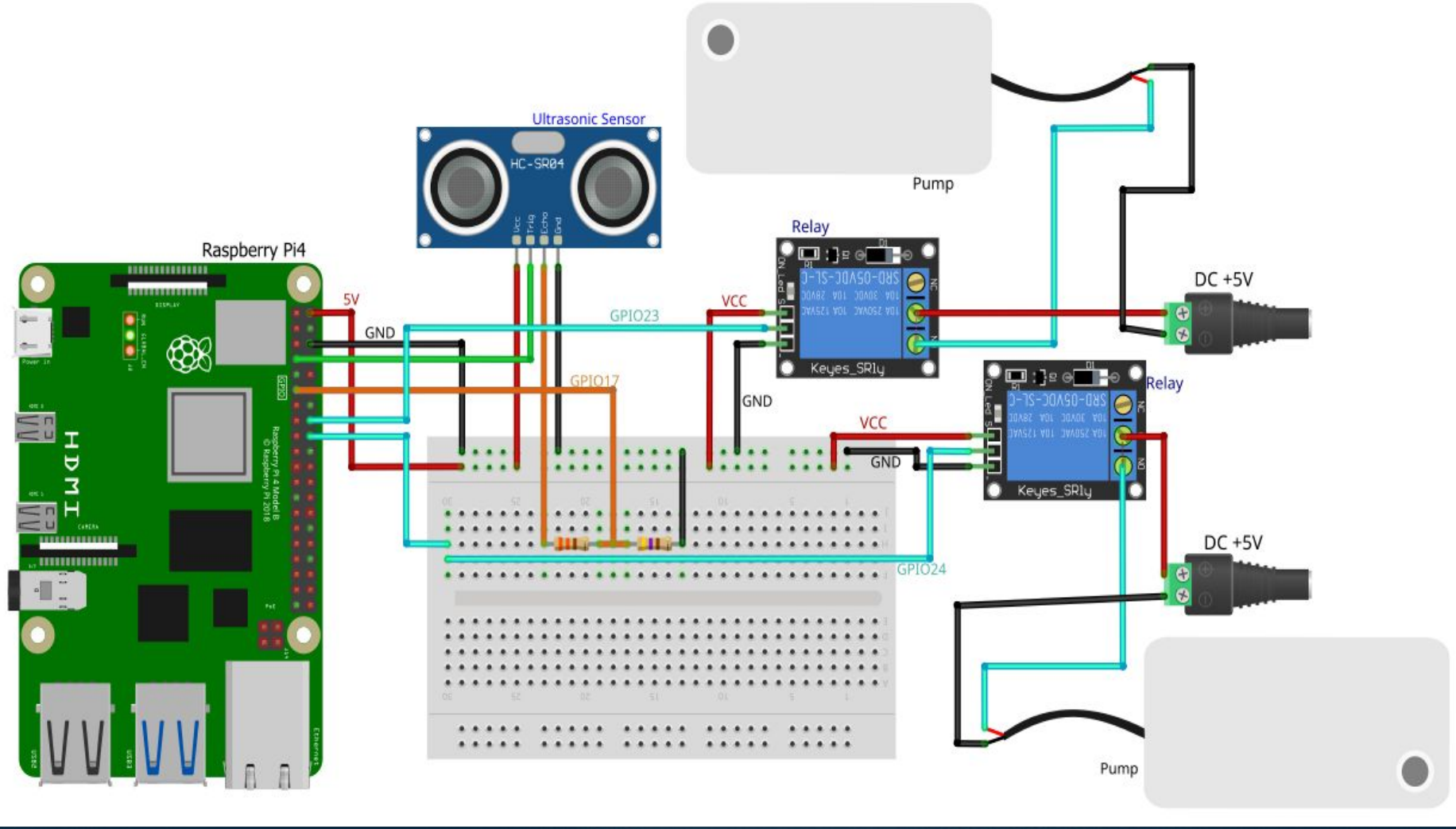
Ultrasonic Sensor
HC-SR04
Vcc
Trig
Echo
Gnd
Pump
Relay
Keyes_SR1y
SRD-05VDC-SL-C
DC +5V
Raspberry Pi4
5V
GND
GPIO23
VCC
GPIO17
GND
VCC
GND
GPIO24
Relay
Keyes_SR1y
SRD-05VDC-SL-C
DC +5V
Pump
HDMI
Raspberry Pi 4 Model B
© Raspberry Pi 2018

Pen Testing

Test Environment
- Kali Linux
- ICS test network
- Mango Automation

Tools Use
- Nmap, network scanning
- Metasploit, vulnerability testing
- Modbus tools, protocol manipulation

Attacks
- Replay Attack
- MITM
- Network scanning and device discovery

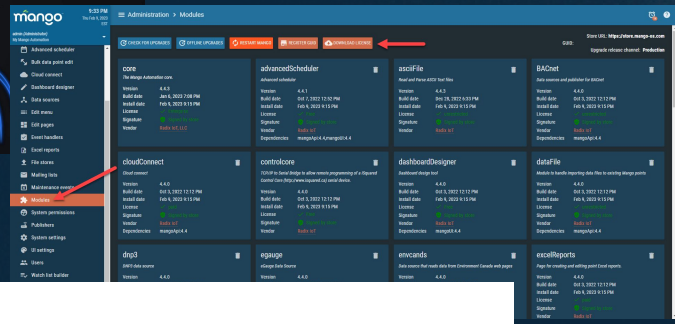

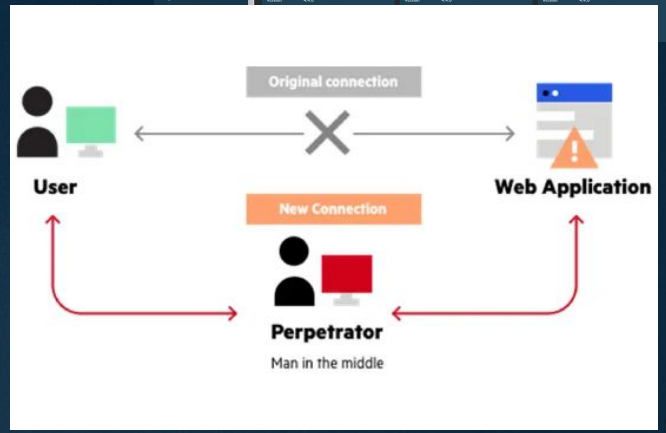

TimeLine

February 01 - March 31	Research & System Design (ICS, SCADA, Modbus, diagrams), Review ICS cybersecurity attack.
April 01 - May 31	Hardware Implementation (assemble system, pumps, relay, and Raspberry Pi), verify sensor reading, and test pump control.
June 01 - July 31	Control system development, Python control program, sensor data, Modbus communication, and data verification.
August 01 - September 30	SCADA integration, Mango Automation, Modbus data points, HMI, monitoring tank levels, and starting with a cybersecurity test environment.
October 01 - November 30	Continue with the cybersecurity test environment, configure Kali attacks, network scanning, and MITM.
December 11	Documentation, security analysis report.

Why did I choose this project?

Thank You