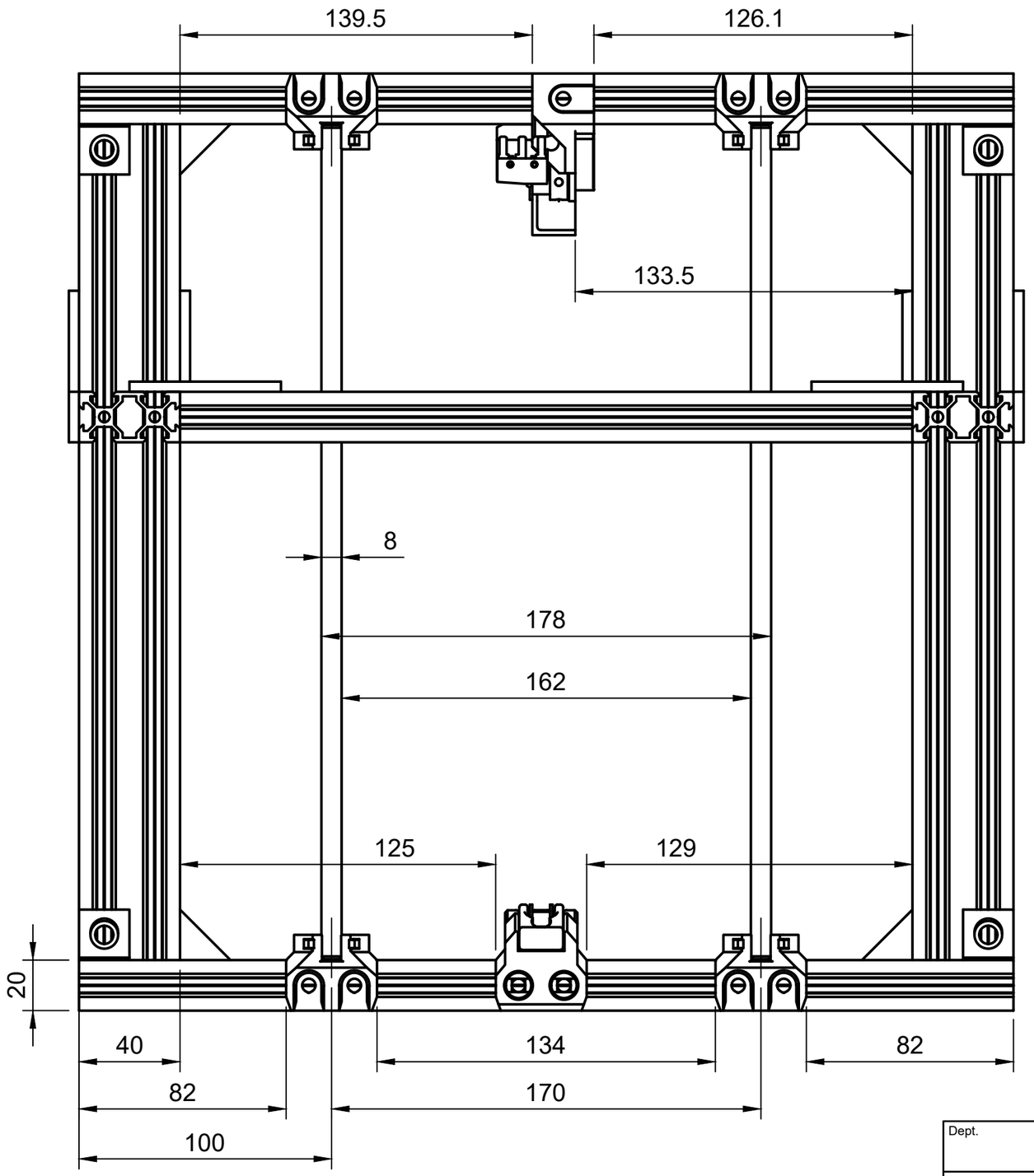

View: Top
Units: mm
Scale: 1:2
Paper Size: A3

License: GPLv3

Dept.	Technical reference	Created by	Approved by
		Grégoire Saunier 23.10.2019	Grégoire Saunier 22th August 2020
		Document type: Release	Document status: Approved
		Title: Bear Frame 2.1 Upgrade MK2(S) and MK2.5(S) Y Axis Parts Positions	DWG No.
			Rev. 1.2 / Date of issue 22th August 2020 / Sheet 1/1