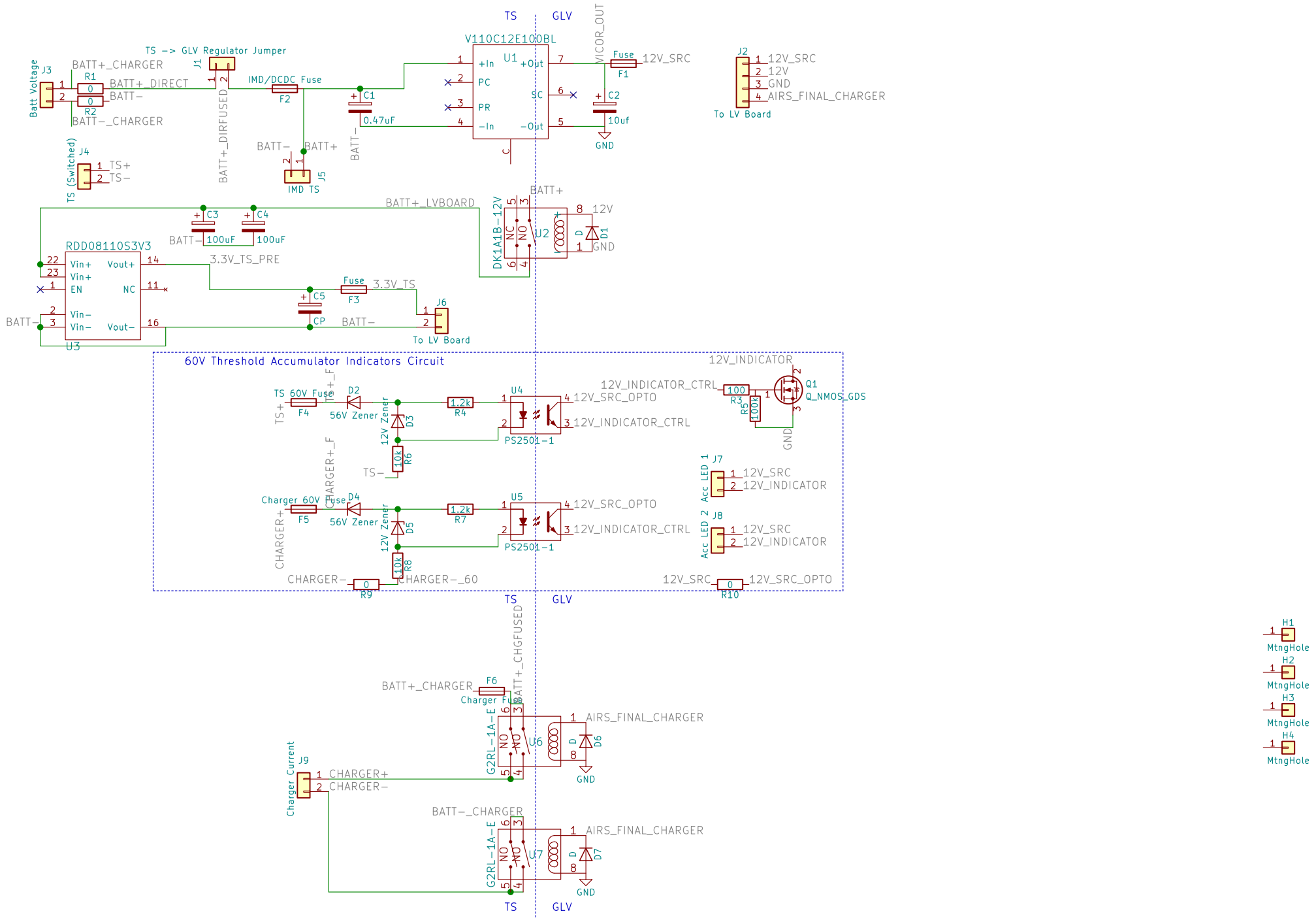
TS
GLV
V110C12E100BL
U1
+In
PC
PR
−In
+Out
SC
−Out
C
VICOR_OUT
Fuse
F1
12V_SRC
C2
10uf
GND
J2
12V_SRC
12V
GND
AIRS_FINAL_CHARGER
To LV Board
Batt Voltage
J3
R1
R2
BATT+_CHARGER
BATT+_DIRECT
BATT−
BATT−_CHARGER
TS −> GLV Regulator Jumper
J1
BATT+_DIRFUSED
IMD/DCDC Fuse
F2
C1
0.47uF
BATT−
BATT+
J5
IMD TS
J4
TS (Switched)
TS+
TS−
BATT+_LVBOARD
C3
C4
100uF
RDD08110S3V3
Vin+
Vin+
EN
Vin−
Vin−
Vout+
NC
Vout−
U3
3.3V_TS_PRE
C5
CP
Fuse
F3
3.3V_TS
J6
To LV Board
DK1A1B−12V
NC
NO
U2
12V
D1
GND
60V Threshold Accumulator Indicators Circuit
TS 60V Fuse
F4
D2
56V Zener
D3
12V Zener
R4
1.2k
U4
PS2501−1
12V_SRC_OPTO
12V_INDICATOR_CTRL
R6
10k
TS+
TS−
CHARGER+_F
Charger 60V Fuse
F5
D4
56V Zener
D5
12V Zener
R7
1.2k
U5
PS2501−1
12V_SRC_OPTO
12V_INDICATOR_CTRL
R8
10k
CHARGER+
CHARGER−
R9
CHARGER−_60
12V_INDICATOR
12V_INDICATOR_CTRL
R3
100
R5
100k
Q1
Q_NMOS_GDS
GND
J7
Acc LED 1
12V_SRC
12V_INDICATOR
J8
Acc LED 2
12V_SRC
12V_INDICATOR
12V_SRC
R10
12V_SRC_OPTO
BATT+_CHGFUSED
BATT+_CHARGER
F6
Charger Fuse
G2RL−1A−E
U6
AIRS_FINAL_CHARGER
D6
GND
J9
Charger Current
CHARGER+
CHARGER−
BATT−_CHARGER
U7
AIRS_FINAL_CHARGER
D7
GND
H1
H2
H3
H4
MtngHole