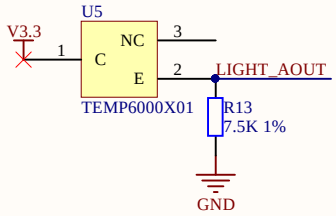

LIGHT SENSOR

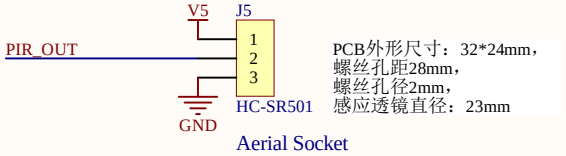

HUMAN SENSOR(PIR)

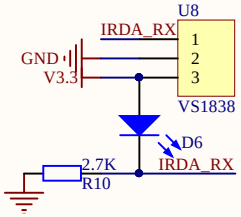

IR

BOOT1=x BOOT0=0 从用户闪存启动，这是正常的工作模式。
BOOT1=0 BOOT0=1 从系统存储器启动，这种模式启动的程序功能由厂家设置。
BOOT1=1 BOOT0=1 从内置SRAM启动，这种模式可以用于调试。

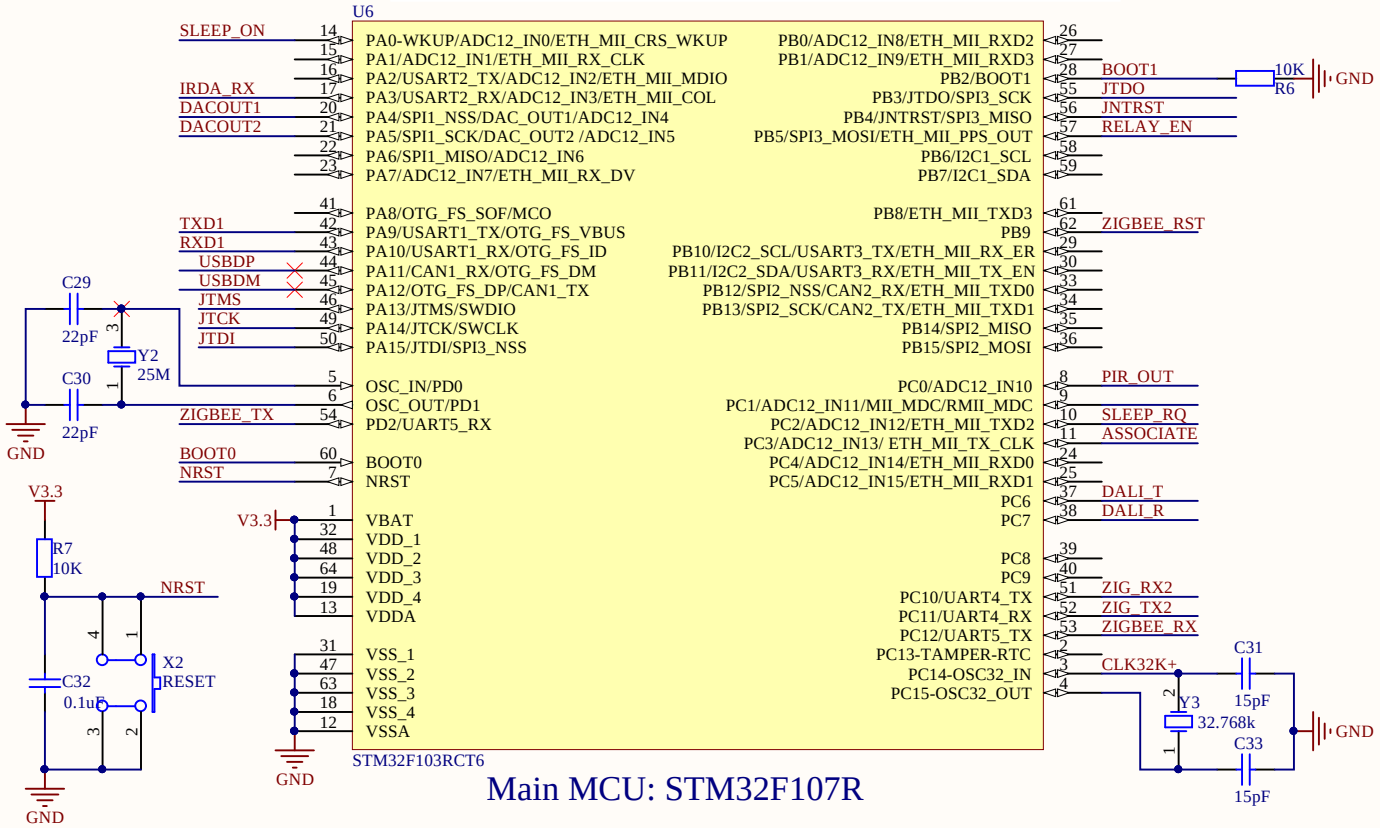

Main MCU: STM32F107R

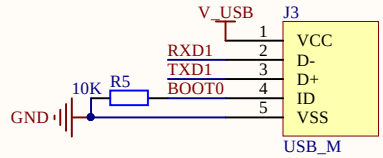

Use customized USB-UART cable, user can either update FW, or communicate to ST MCU's RXD1/TXD1
1. Leave ID unconnected, commnicate to ST MCU UART1;
2. Connect ID pin to 3.3v to update ST MCU FW.

ISP port

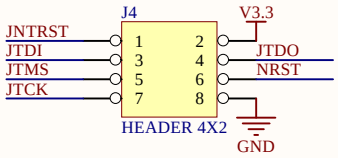

JTAG

Title		
Size A4	Number	Revision
Date: 2016/8/8		Sheet of
File: C:\guyg\..\mcu.SchDoc		Drawn By:

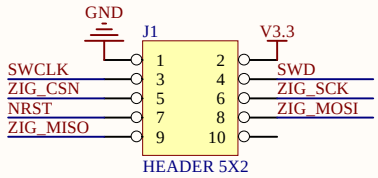

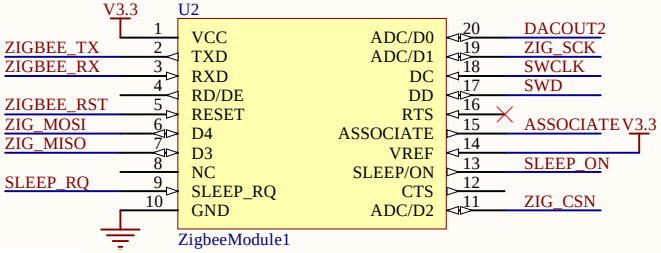

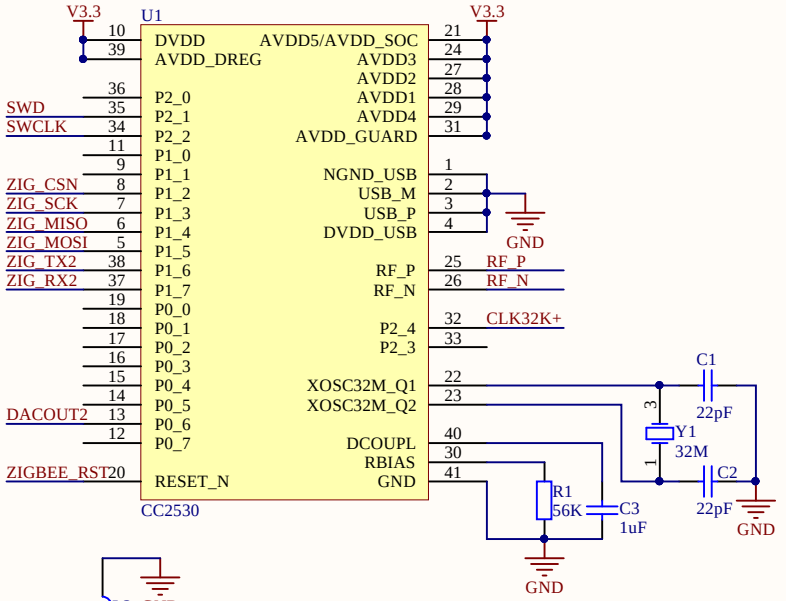

Dali Rx:
-6.5v - 6.5v ----- 0; 9.5v - 22.5v ------ 1
Dali Tx:
0 ----- 16v; 1 ----- 0v
For Dali_Tx signal, the logic is the reverse of that in ver1 HW design. ie., when setting Dali_tx pin to 1, it sends 0 to SR interface; when setting Dali_tx pin to 0, it sends 1 to SR interface.

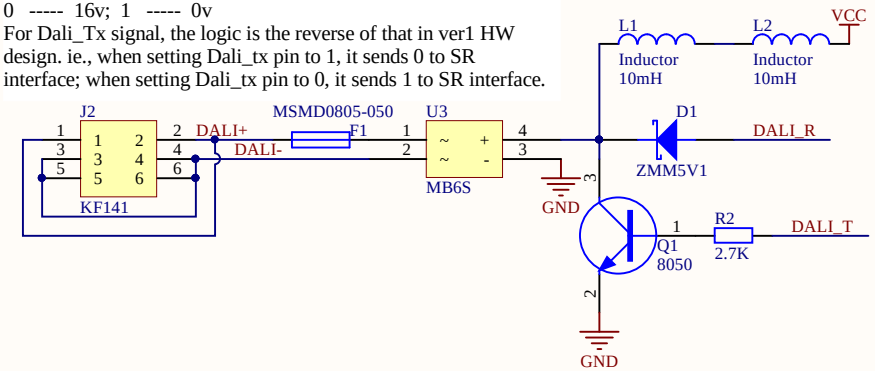

DALI: RX

DALI: TX

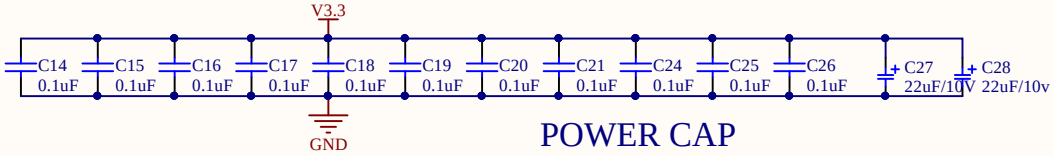

POWER CAP

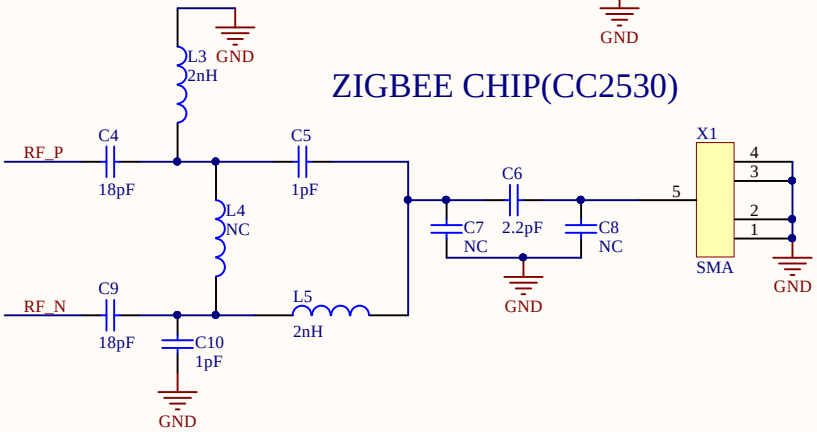

ZIGBEE CHIP(CC2530)

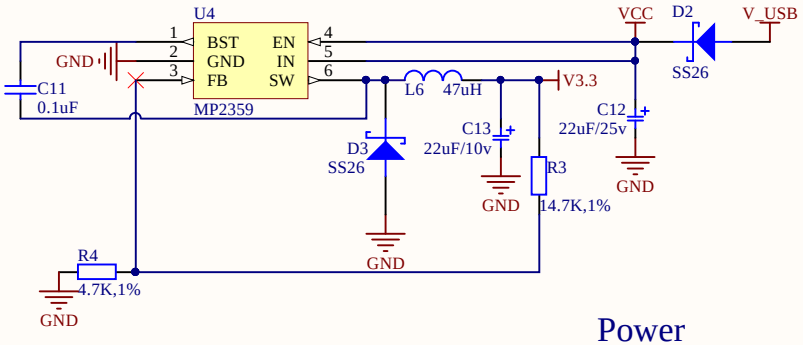

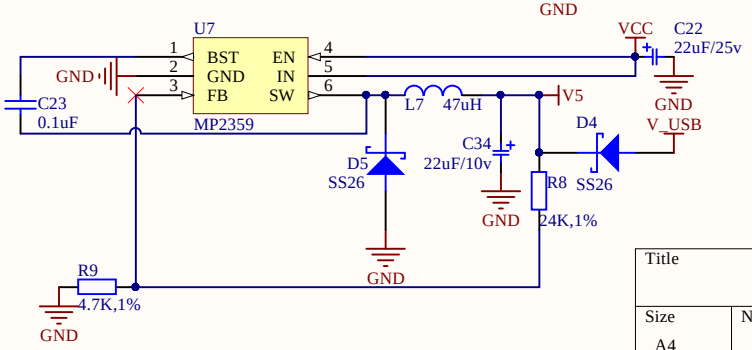

Power

Title		
Size A4	Number	Revision
Date: 2016/8/8	Sheet of	
File: C:\guyg\..\zigbee.SchDoc	Drawn By:	

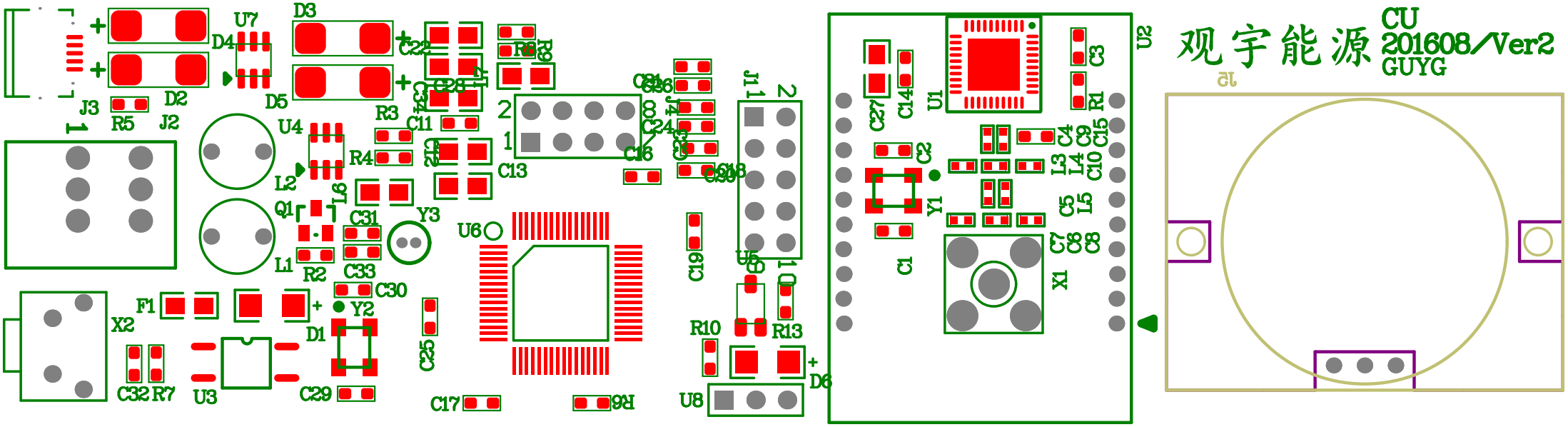
观宇能源
CU
201608/Ver2
GUYG
U7
D3
D4
D2
D5
J3
R5
J2
U4
R3
R4
L2
L6
Q1
L1
R2
C31
C33
Y3
C30
Y2
D1
F1
X2
C32
R7
U3
C29
C25
C17
R6
U6
C13
C11
C22
C28
C34
C16
C24
C19
R10
R13
U8
D6
J1
U5
U1
U2
C27
C14
C3
R1
C2
C4
C9
C15
L3
L4
C10
Y1
C5
L5
C7
C6
C8
C1
X1

Comment	Description	Designator	Footprint	LibRef	Quantity
22pF	Capacitor	C1, C2, C29, C30	0603	Cap	4
1uF	Capacitor	C3	0603	Cap	1
18pF	Capacitor	C4, C9	0402	Cap	2
1pF	Capacitor	C5, C10	0402	Cap	2
2.2pF	Capacitor	C6	0402	Cap	1
NC	Capacitor, Capacitor, [NoValue]	C7, C8, L4	0402	Cap, Cap, INDUCTOR	3
0.1uF	Capacitor	C11, C14, C15, C16, C17, C18, C19, C20, C21, C23, C24, C25, C26, C32	0603	Cap	14
22uF/25v		C12, C22	0805	ECAP	2
22uF/10v		C13, C27, C28, C34	0805	ECAP	4
15pF	Capacitor	C31, C33	0603	Cap	2
ZMM5V1	Schottky Diode	D1	DIODE_1206	DIODE SCHOTTKY	1
SS26	Schottky Diode	D2, D3, D4, D5	DO-214AC	SchottkyDiode	4
LED0	发光二极管	D6	DIODE_1206	LED0	1
MSMD0805-050		F1	0805	FUSE	1
HEADER 5X2		J1	HDR2X5	HEADER 5X2	1
KF141	KF141(2.54mm pitch),兼容KF142(5.08mm pitch)	J2	KF141R	KF141	1
USB_M	MicroUSB接口	J3	USB_MICRO	USB_M	1
HEADER 4X2		J4	HDR2X4	HEADER 4X2	1
HC-SR501	Connector	J5	HC-SR501	CON3	1
Inductor	Inductor	L1, L2	L0608-D5	Inductor	2
2nH		L3, L5	0402	INDUCTOR	2
47uH	叠层电感	L6, L7	0805	L	2
8050	NPN Transistor	Q1	SOT-23	NPN	1
56K	Resistor	R1	0603r	Res2	1
2.7K	Resistor	R2, R10	0603r	Res2	2
14.7K,1%	Resistor	R3	0603r	Res2	1
4.7K,1%	Resistor	R4, R9	0603r	Res2	2
10K	Resistor	R5, R6, R7	0603R	Res2	3
24K,1%	Resistor	R8	0603r	Res2	1
7.5K 1%	Resistor	R13	0603R	Res2	1
CC2530		U1	PVQFN-N40	CC2530	1
ZigbeeModule1	Zigbee module - xiamen SiXin	U2	ZIGBEE_XIAMENSIXIN	Zigbee_XiaMenSiXin	1
MB6S		U3	SO-04	MB4S	1
MP2359	Power Convertor	U4, U7	TSOT23-6	MP2359	2
TEMP6000X01		U5	TEMP6000X01	TEMP6000X01	1
STM32F103RCT6	STM32 ARM-based 32-bit MCU with 128 Kbytes Flash, 64-pin LQFP, Industrial Temperature	U6	LQFP64	STM32F107RBT6	1
VS1838	Header, 3-Pin	U8	HDR1X3	Header 3	1
SMA		X1	SMA-KE	SMA	1
RESET	SE PUSHBUTTON	X2	Button_6X6X5_Vertical	SW PUSHBUTTON	1
32M	Crystal Oscillator	Y1	3225	XTAL_4pin	1
25M	Crystal Oscillator	Y2	3225	XTAL_4pin	1
32.768k	Crystal Oscillator	Y3	CSA_Crystal	XTAL	1