Ev3 Threaded Tank

Model instructions by Smallrobots.it

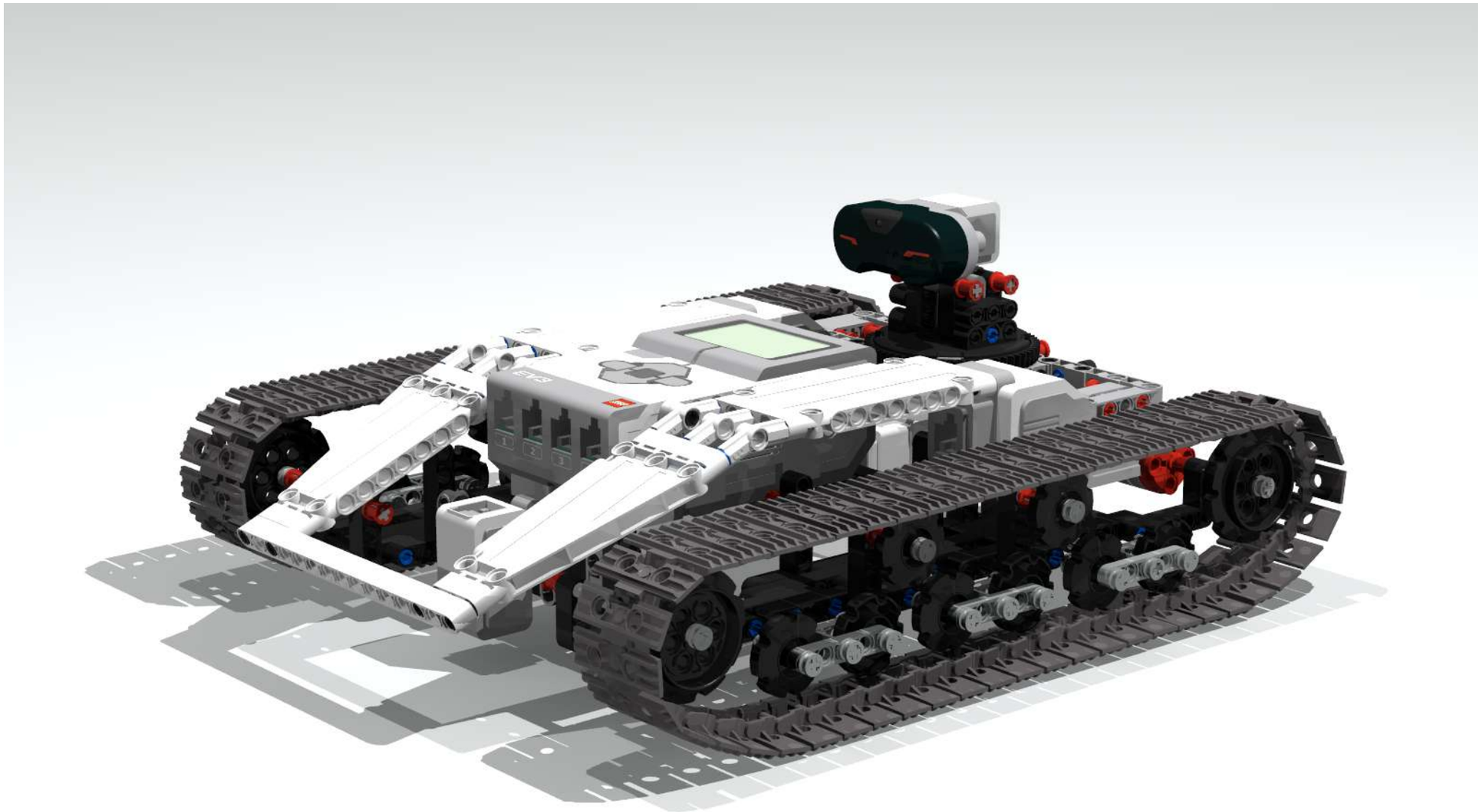

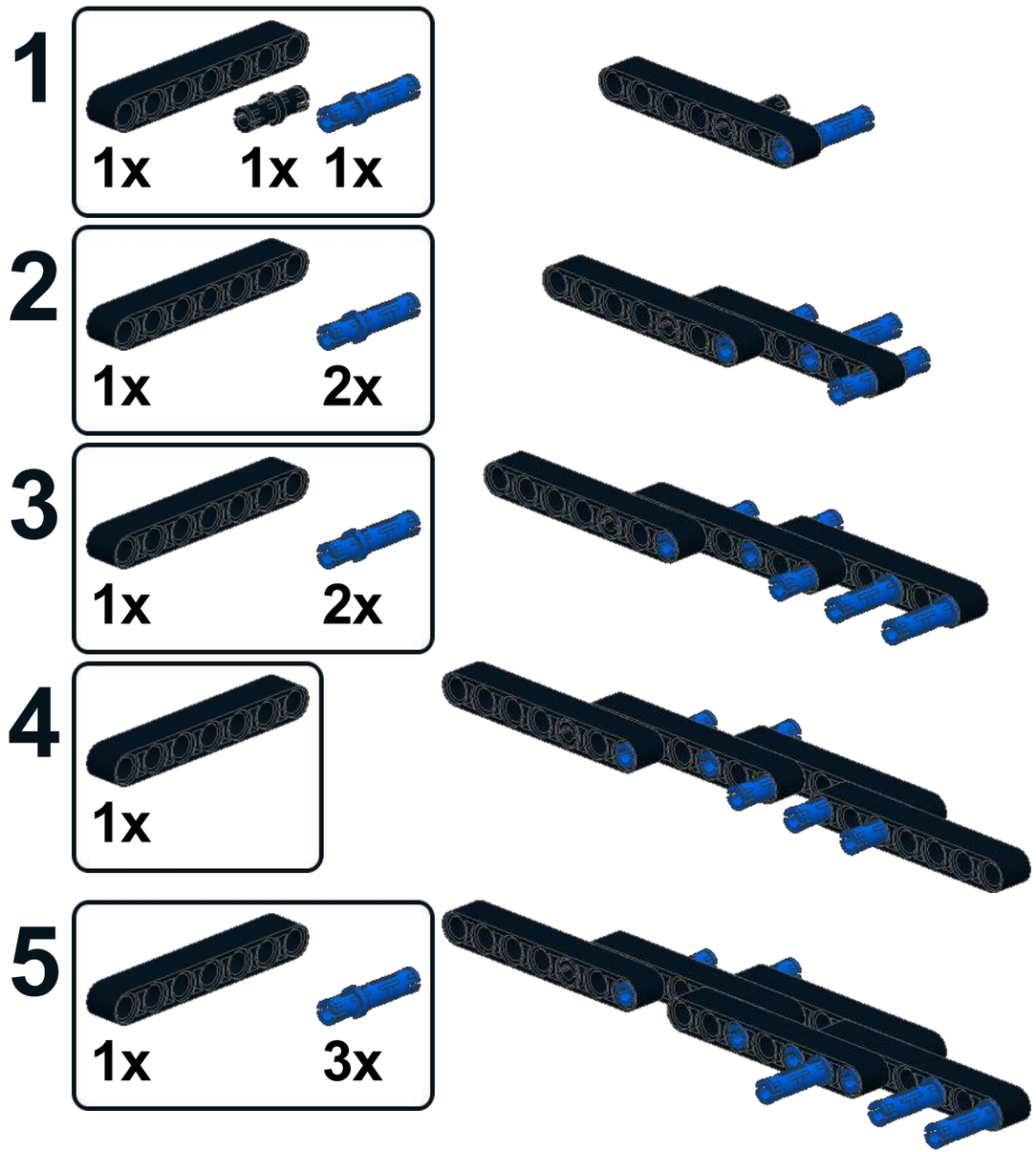
1
1x
1x
1x
2
1x
2x
3
1x
2x
4
1x
5
1x
3x

6

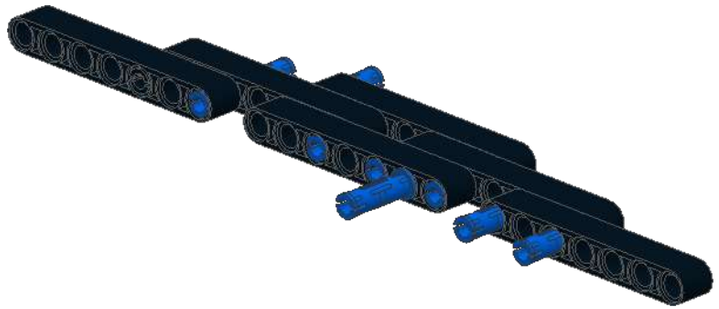

7

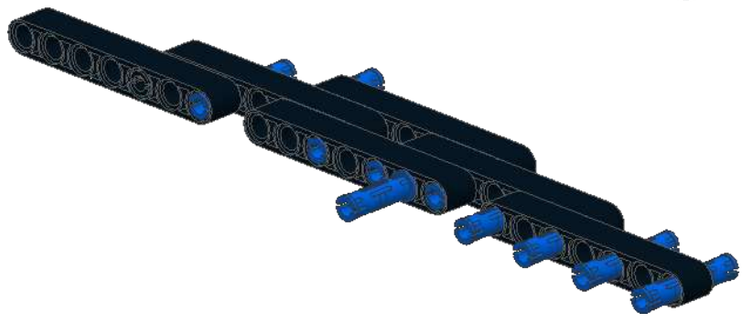

8

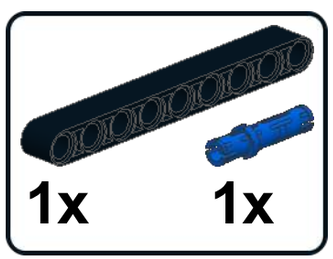

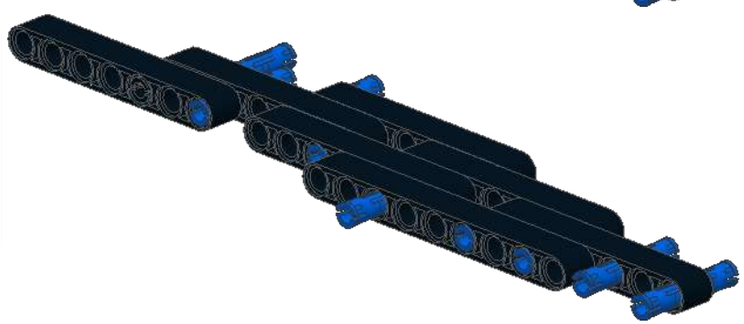

9

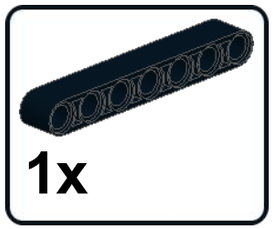

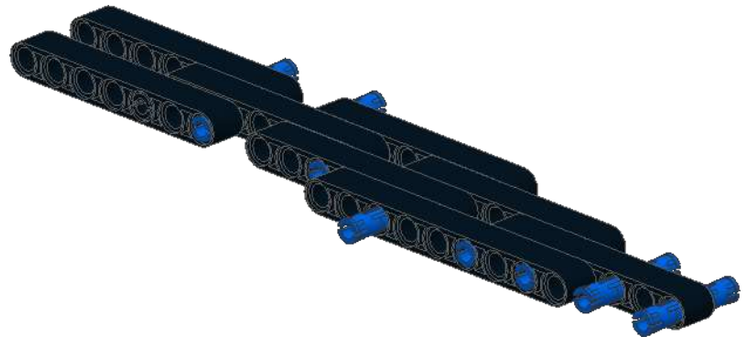

10

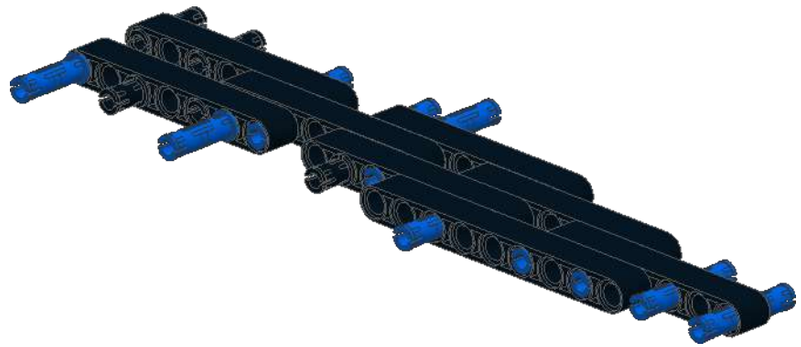

11

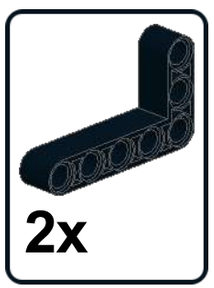

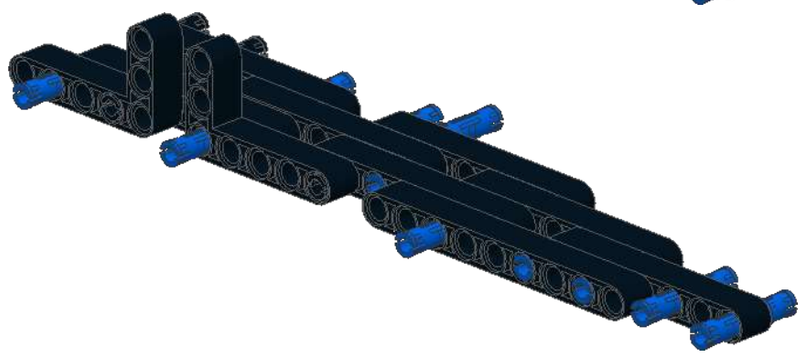

12

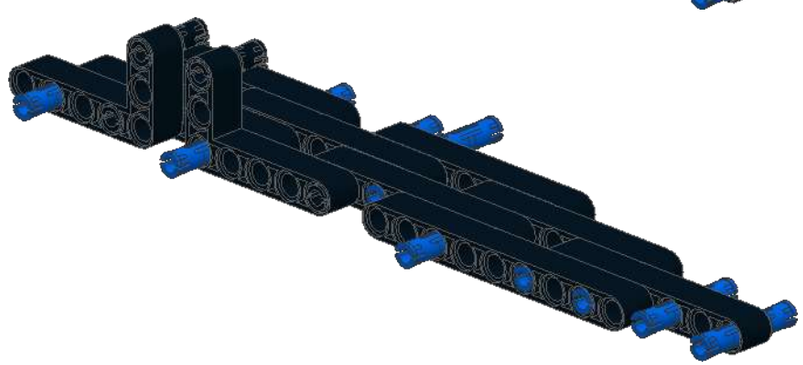

13

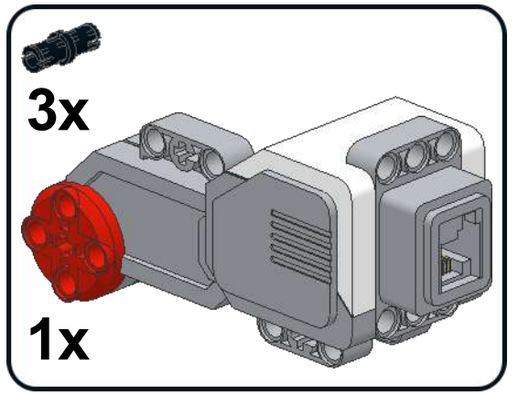

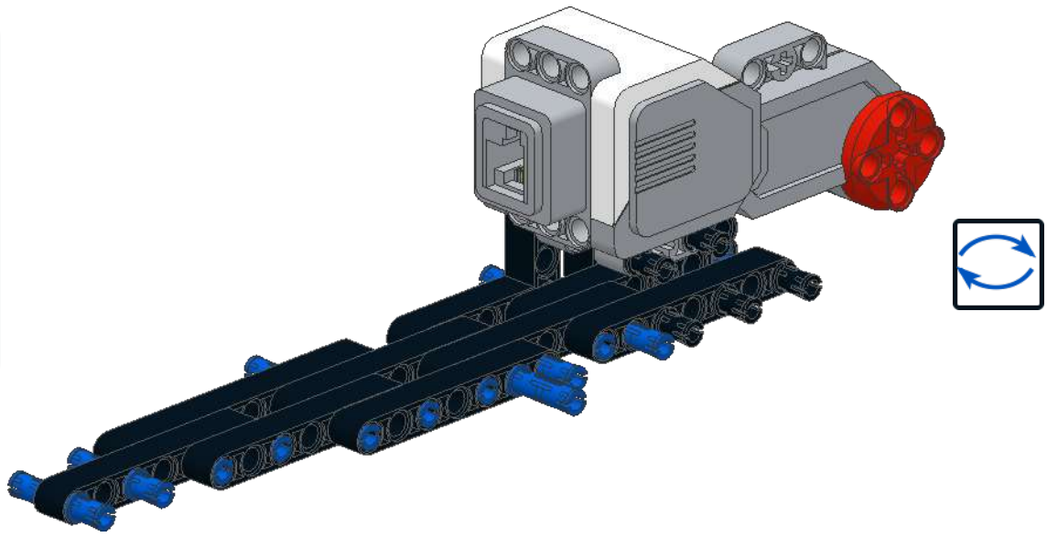

14

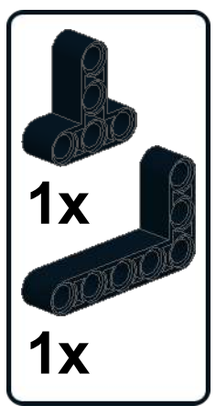

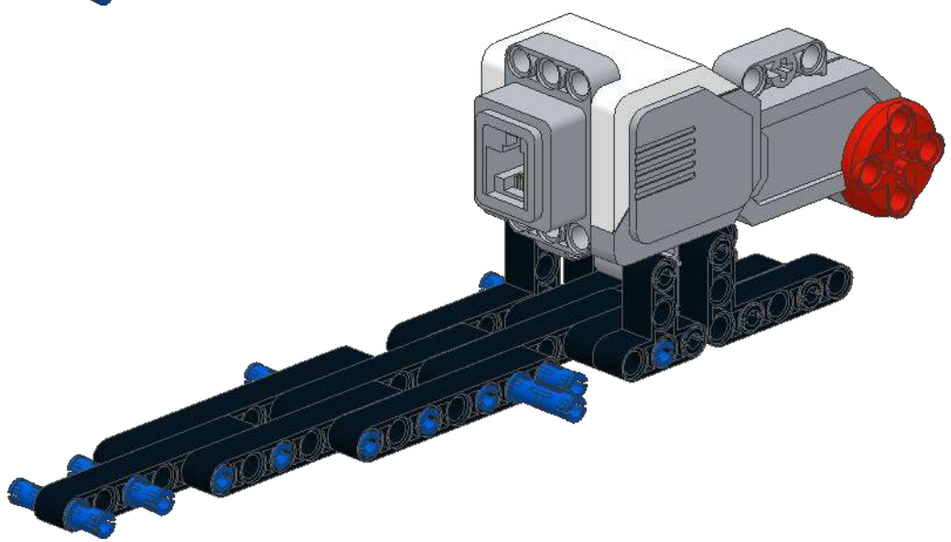

15

2x

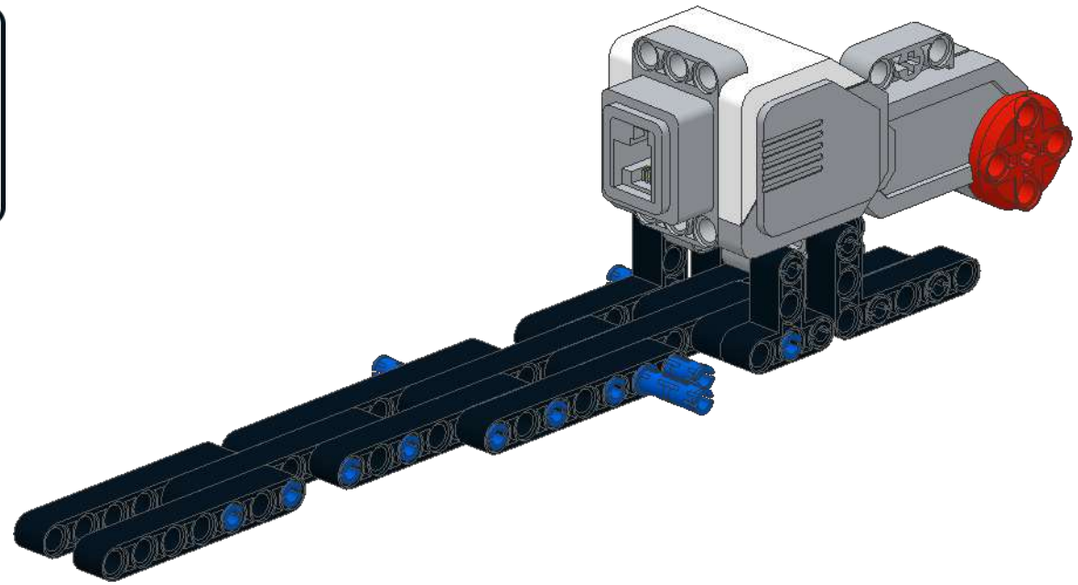

16

3x

1x

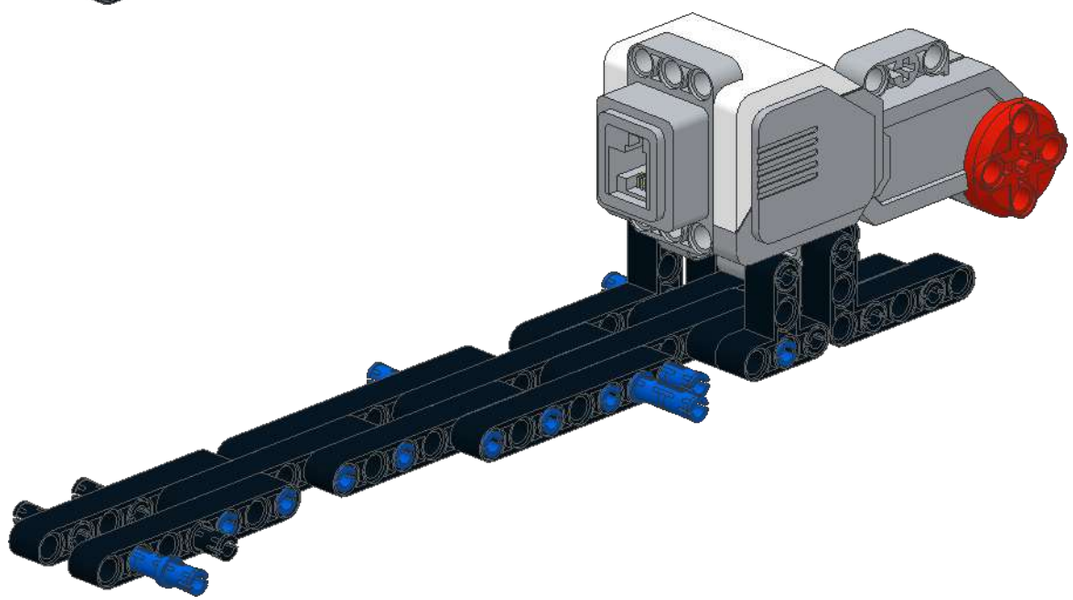

17

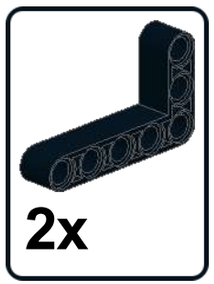

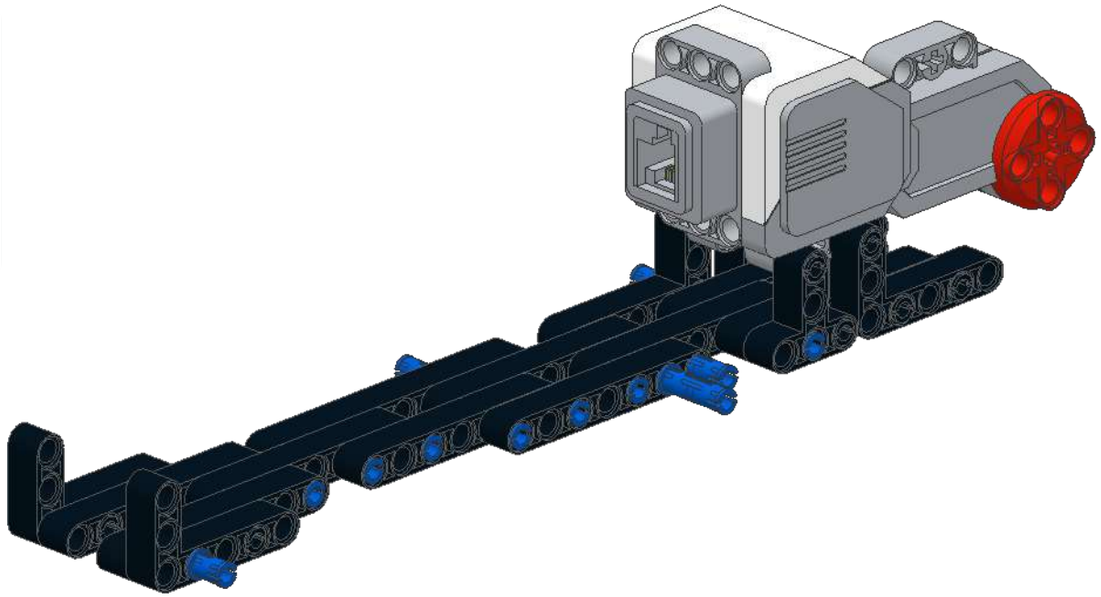

18

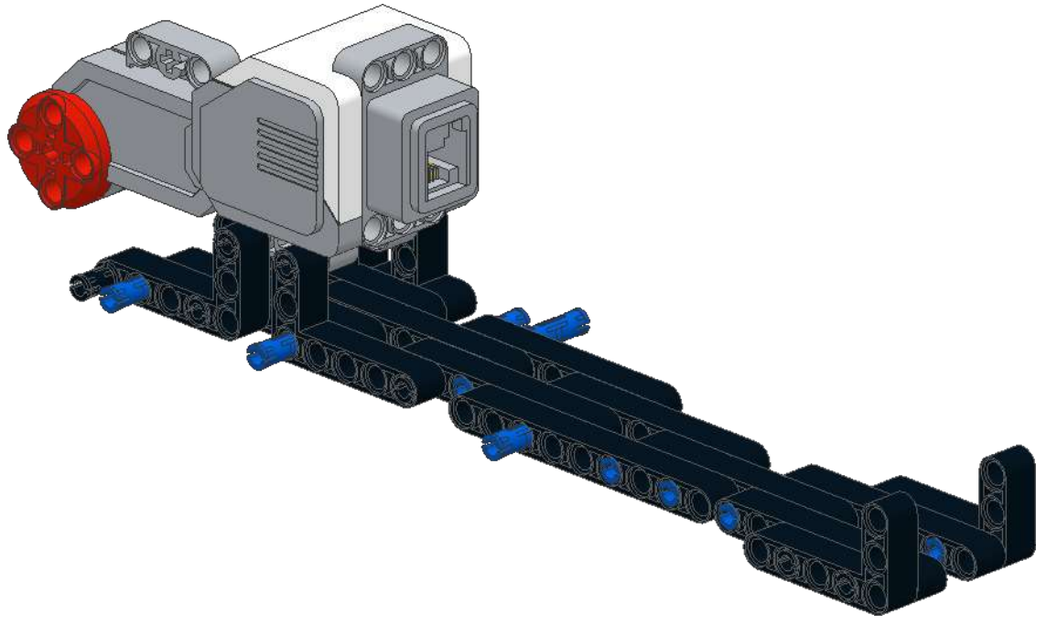

19

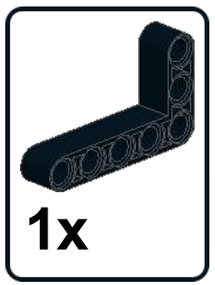

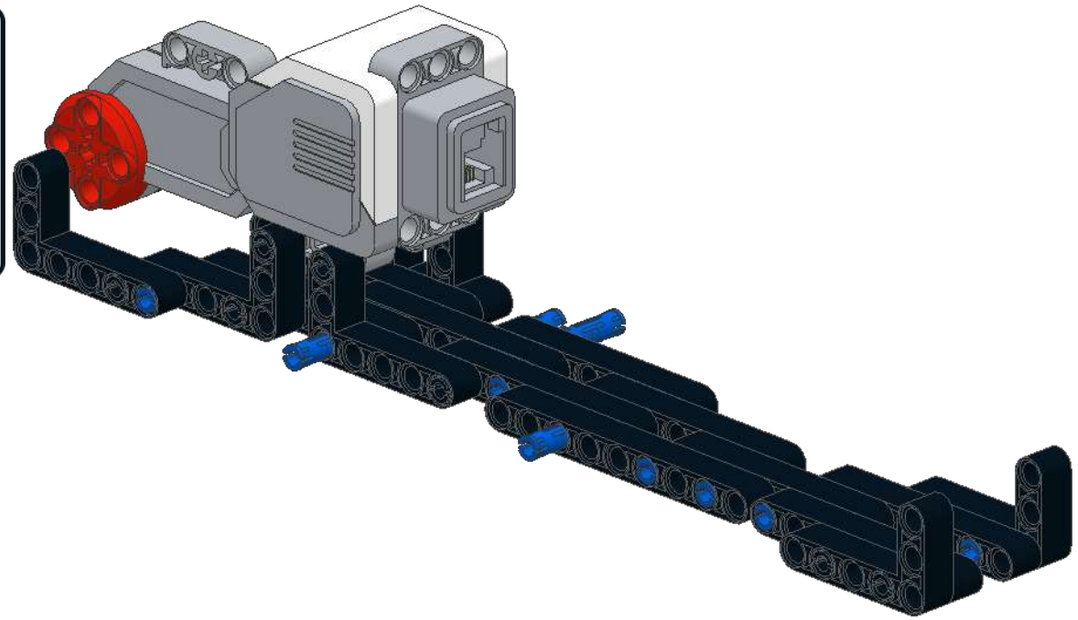

20

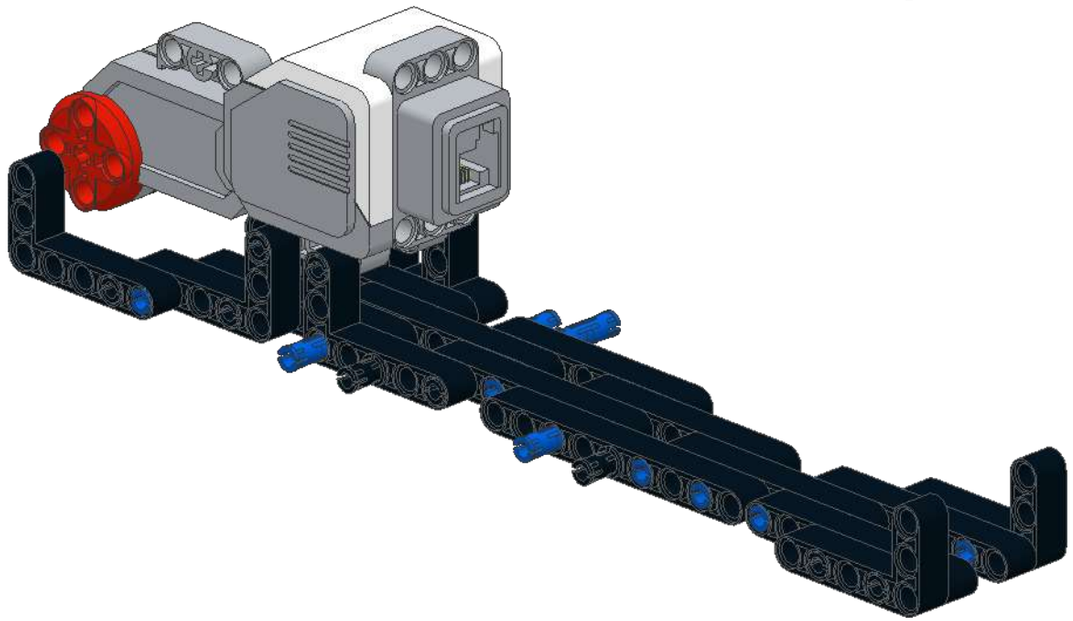

21

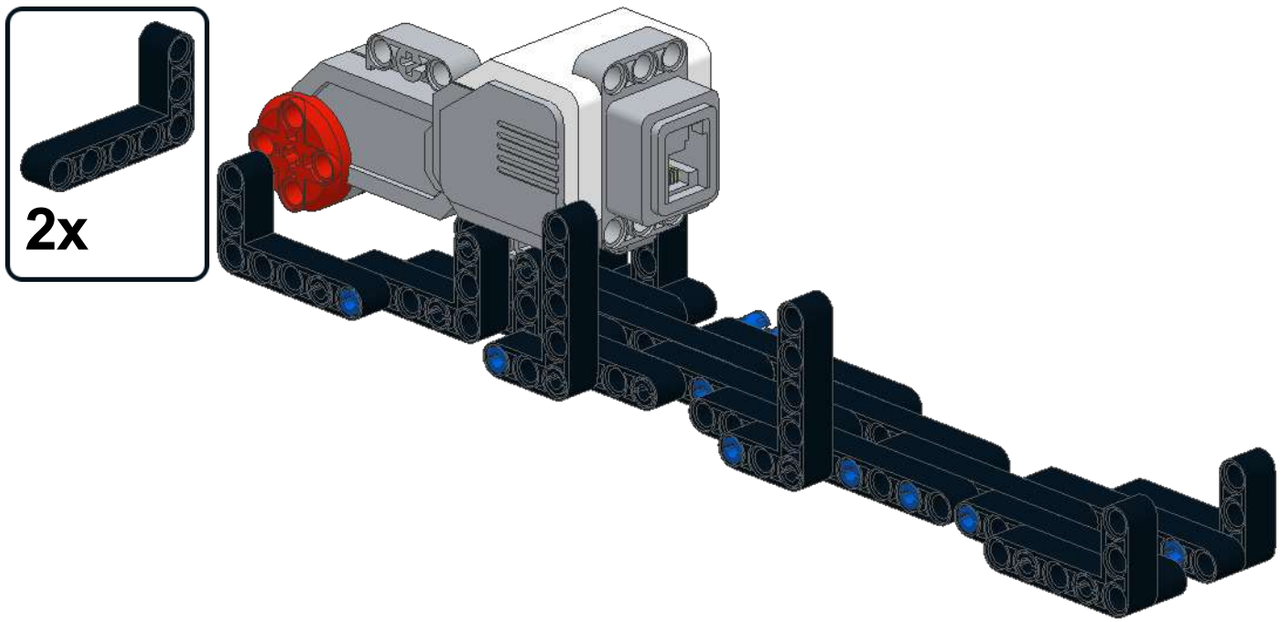

22

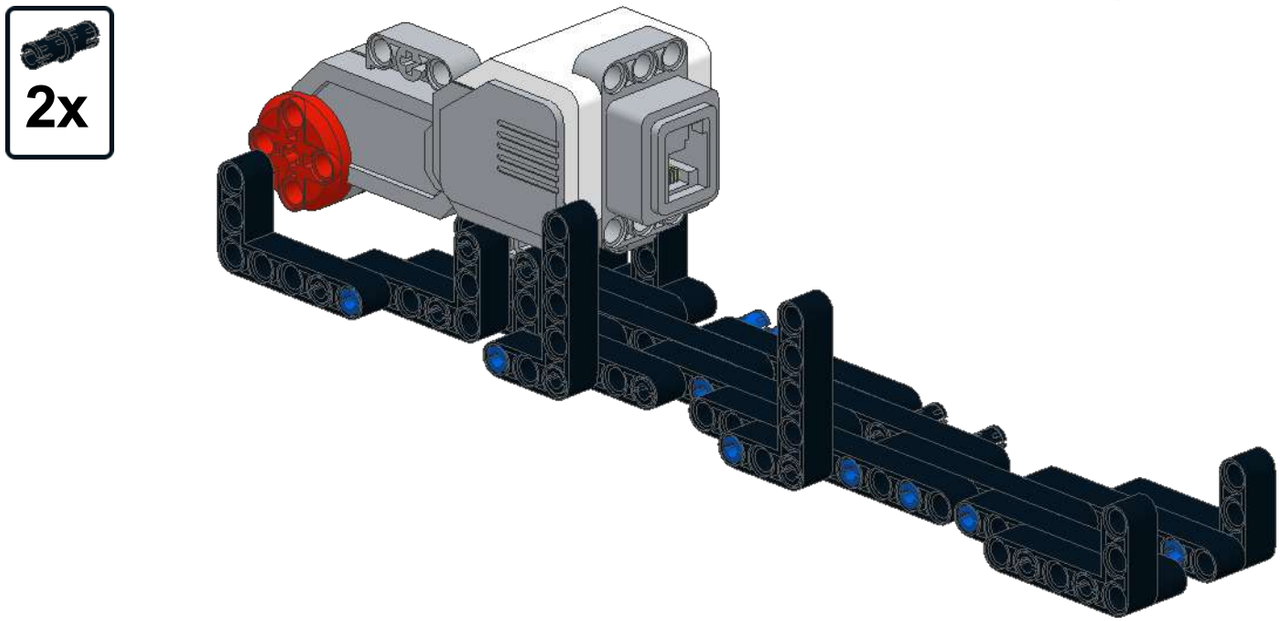

23

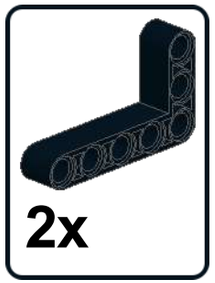

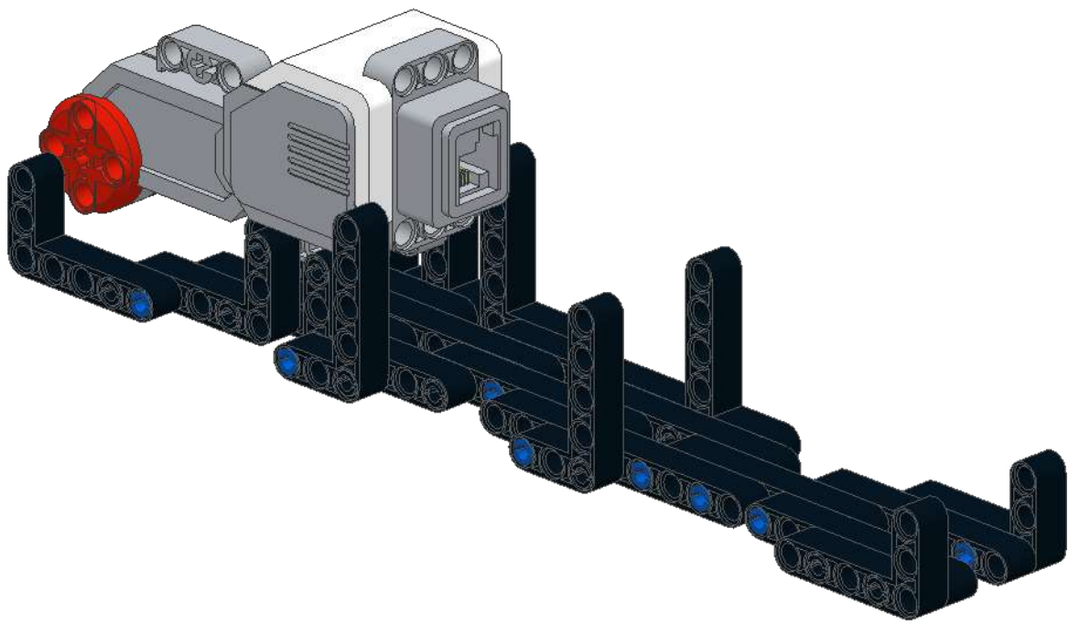

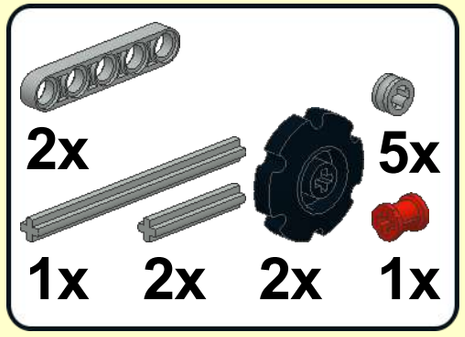

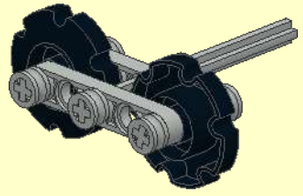

x4

24

2x

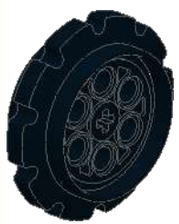

1x

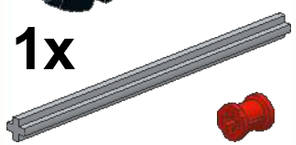

1x

2x

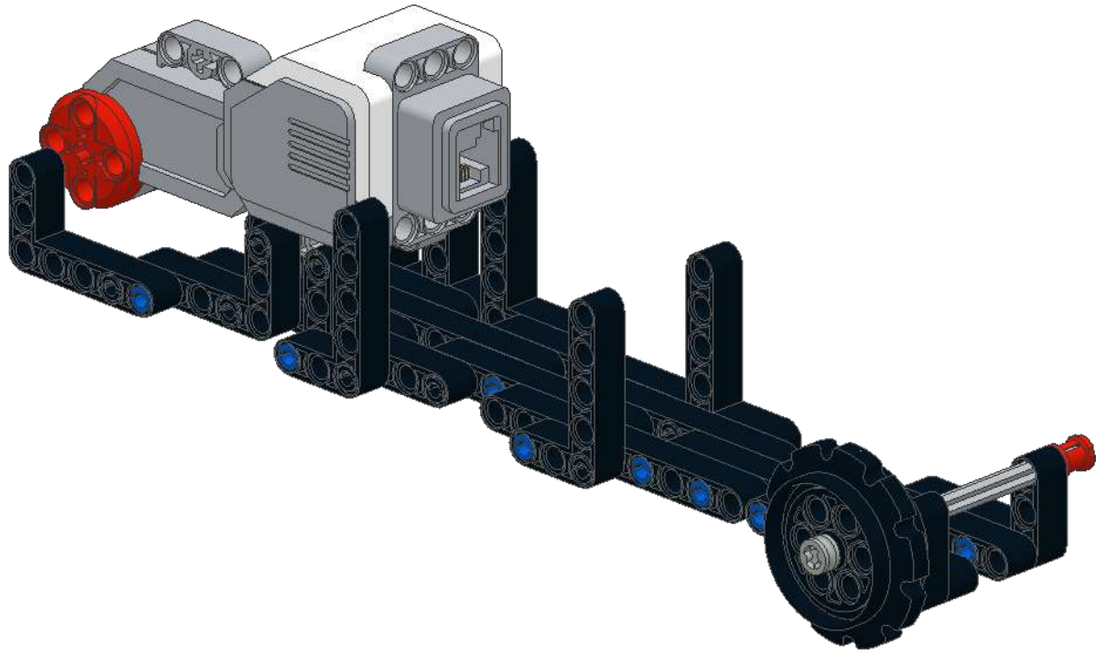

25

1x

1x

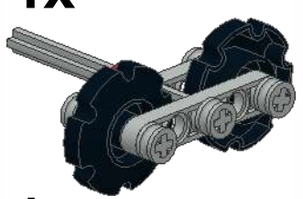

1x

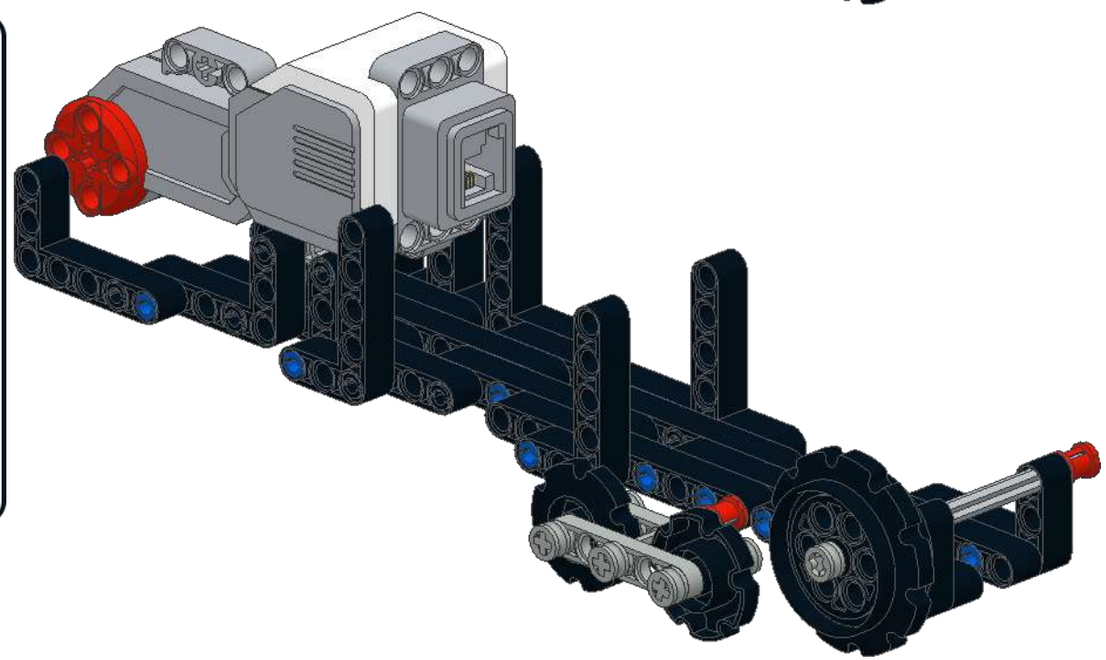

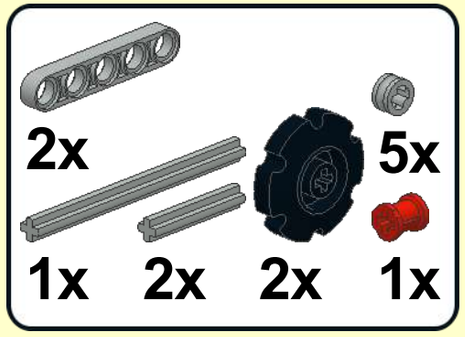

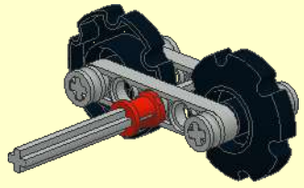

x2

26

1x

1x

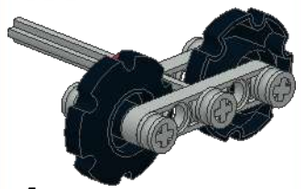

1x

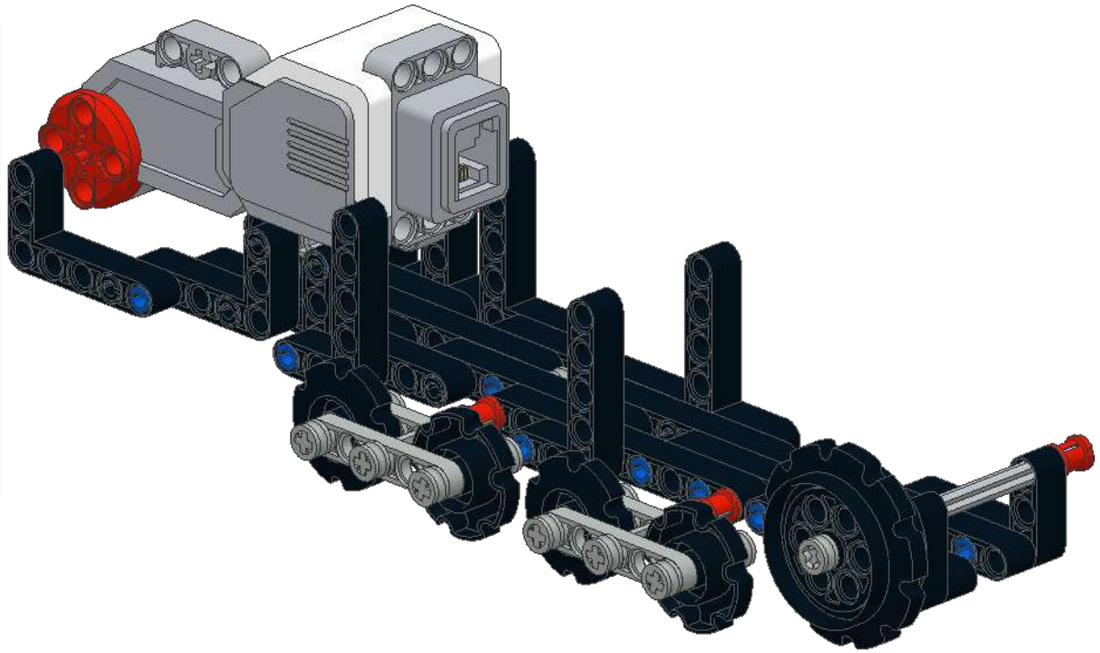

27

1x

1x

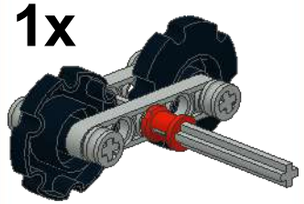

1x

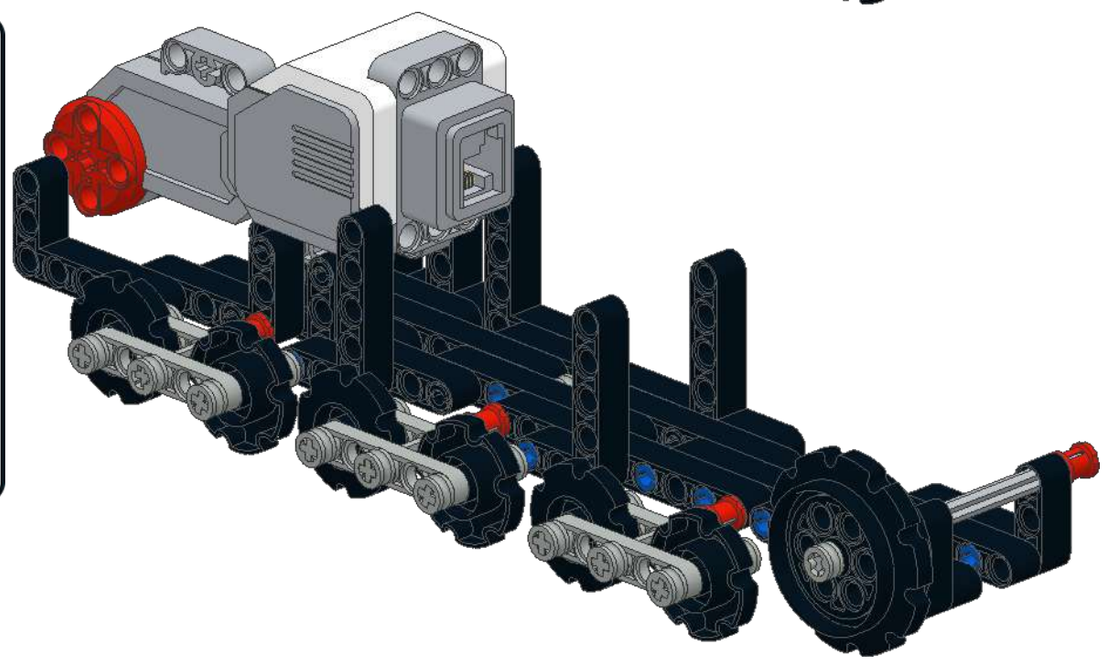

28

1x

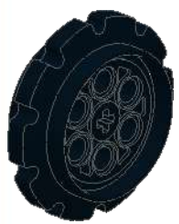

1x

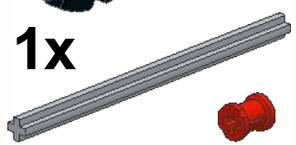

1x 3x

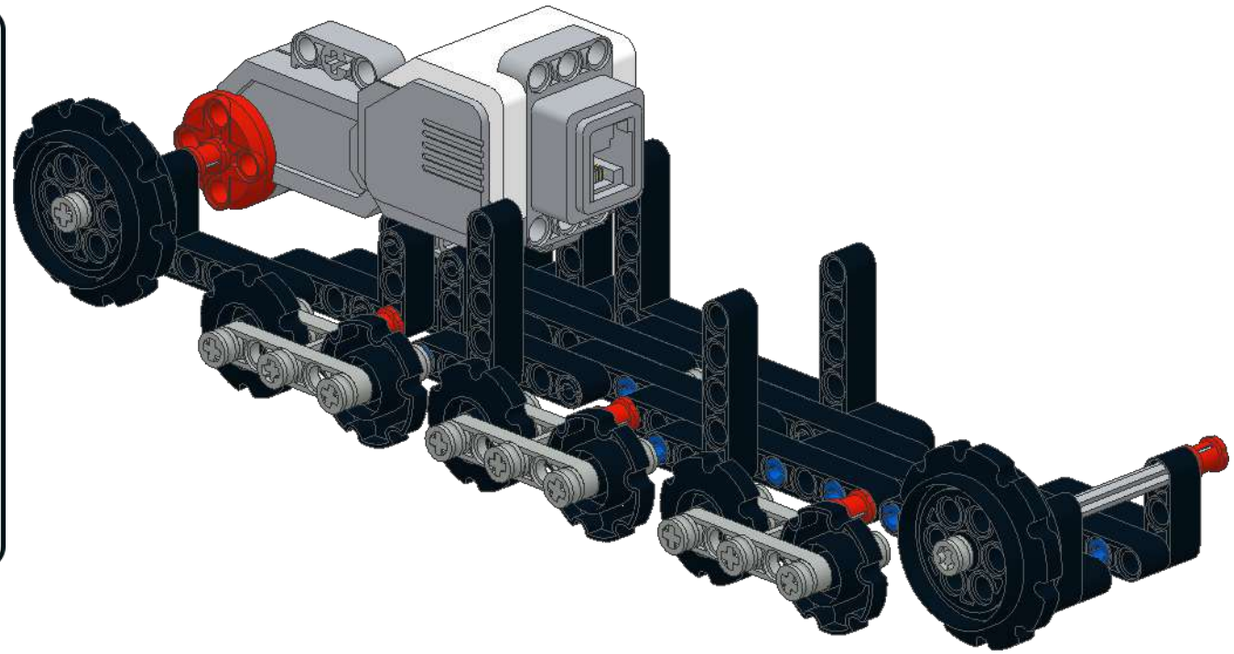

29

4x

2x

2x 4x

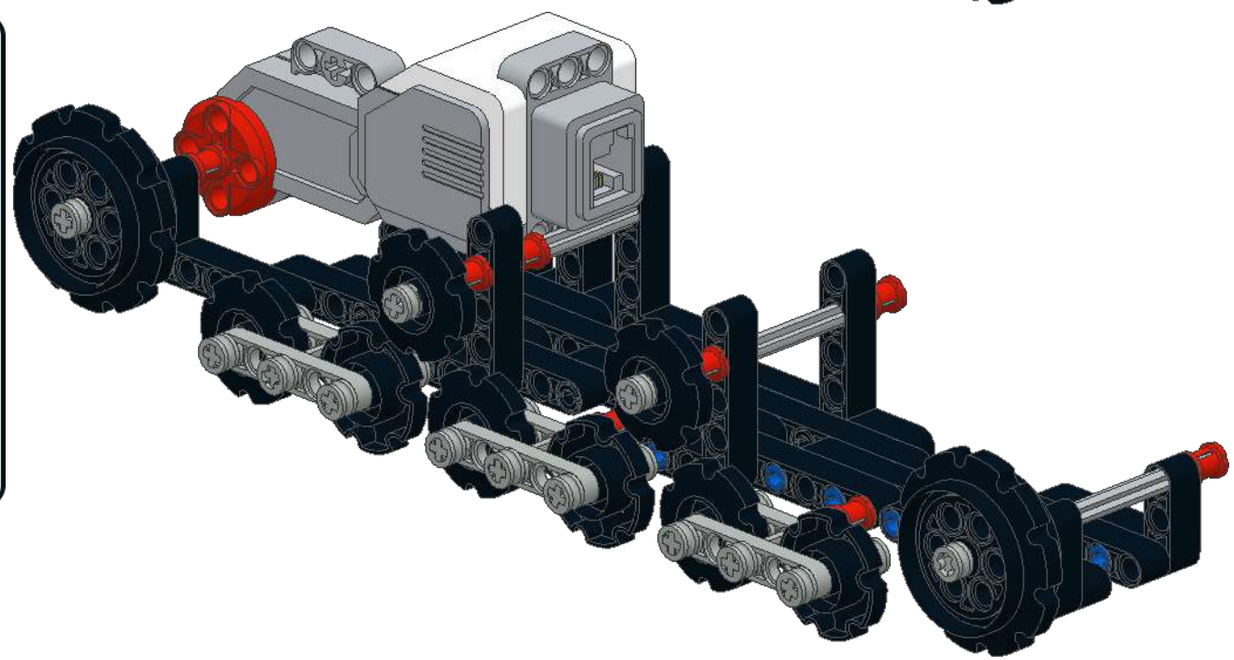

30

1x

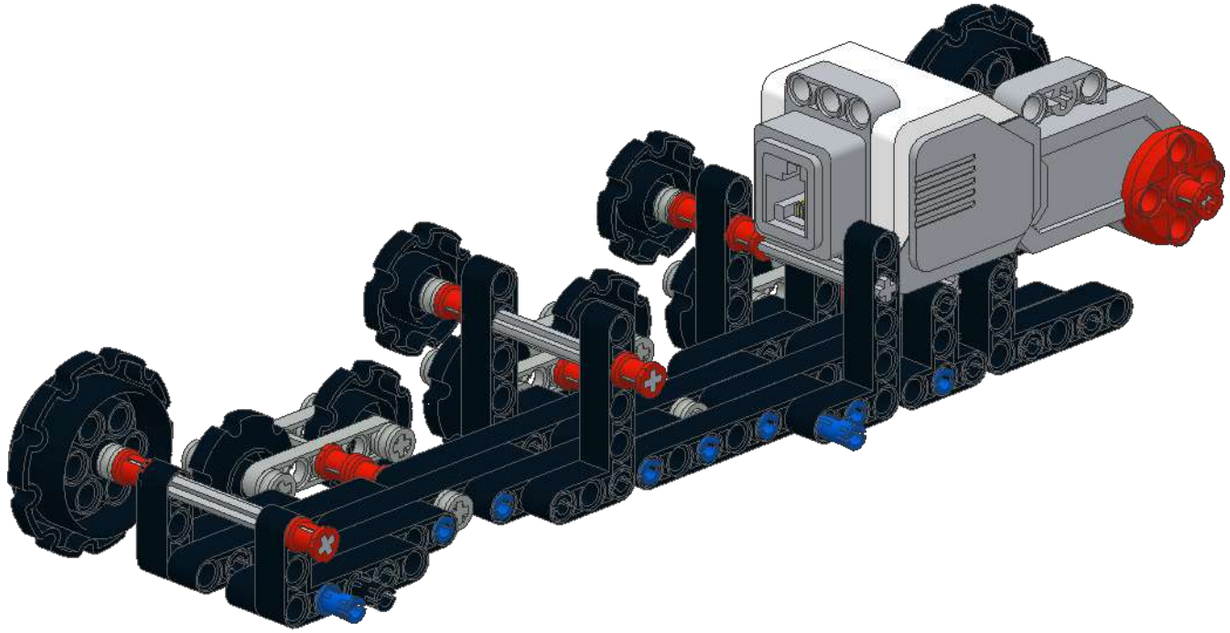

31

1x

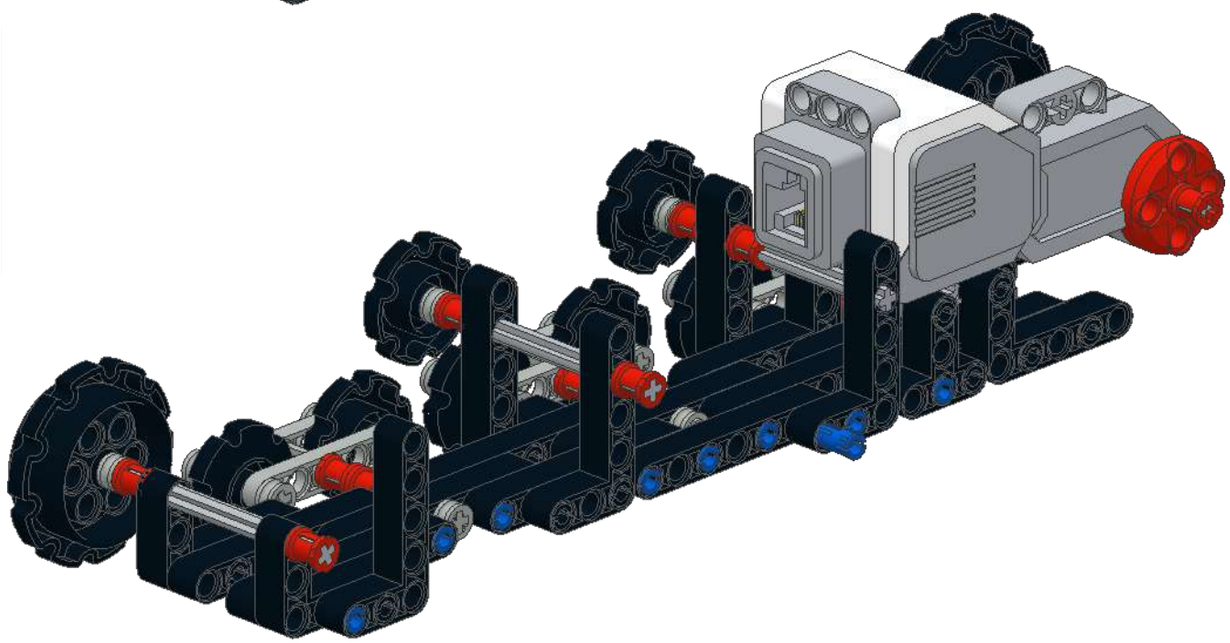

32

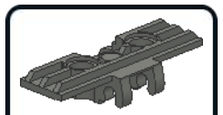

52x

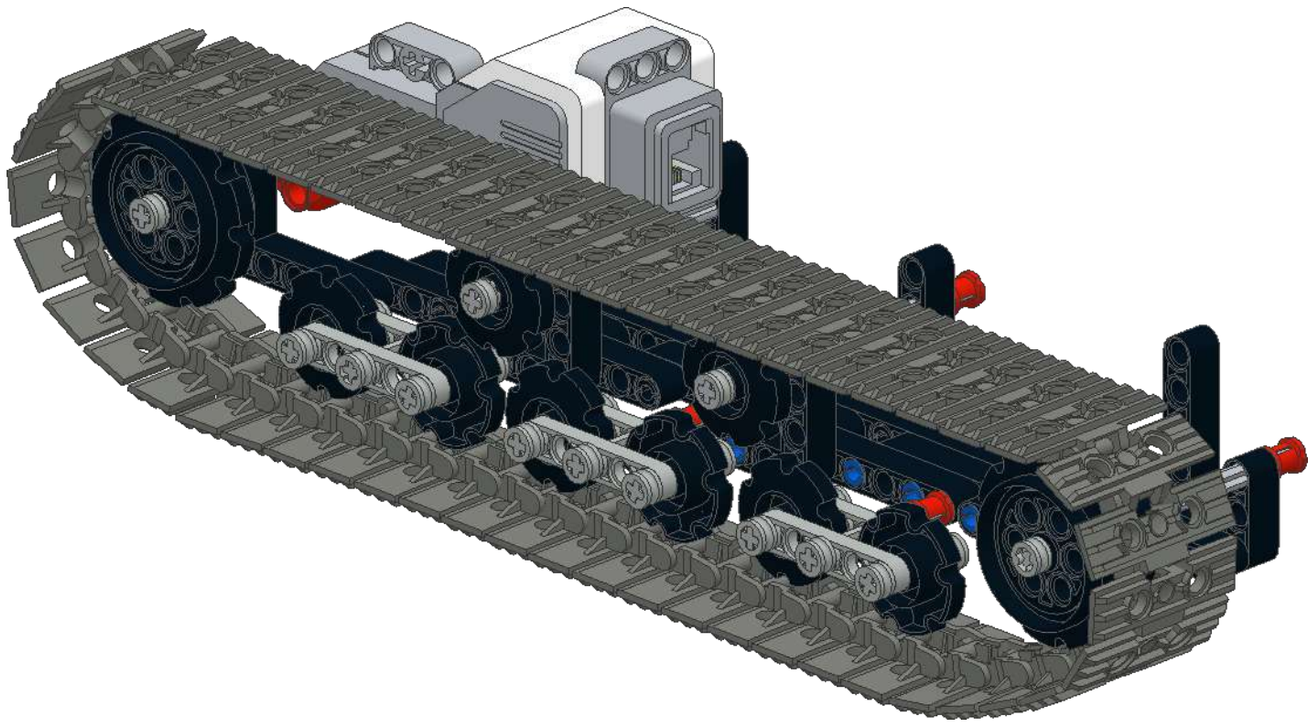

33

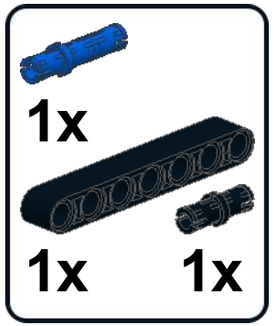

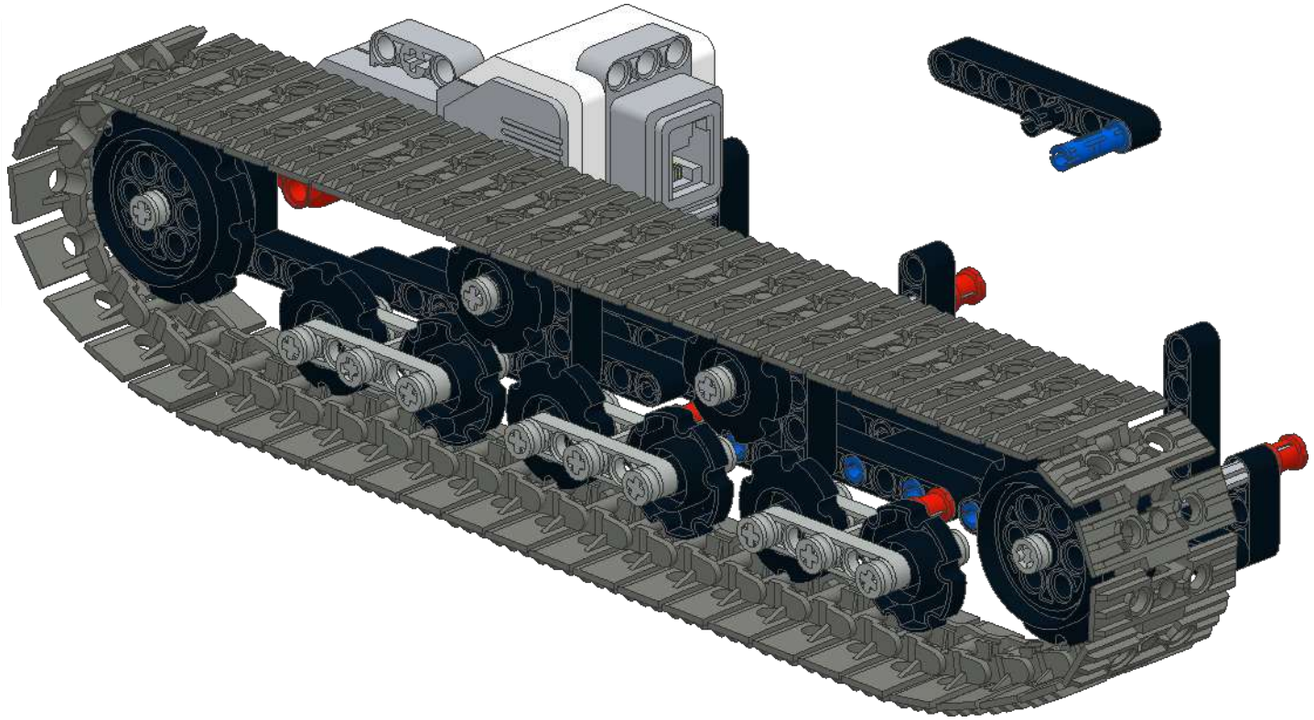

34

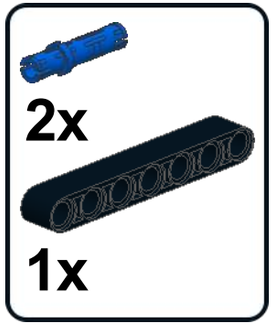

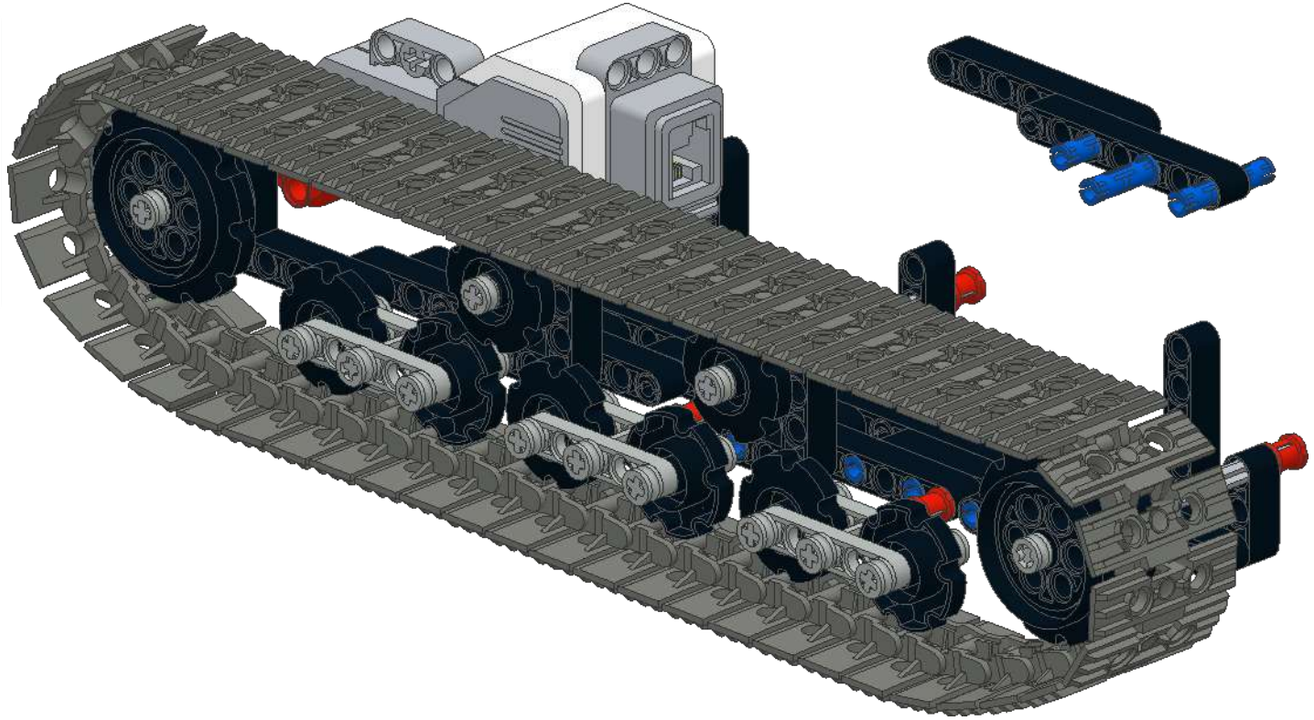

35

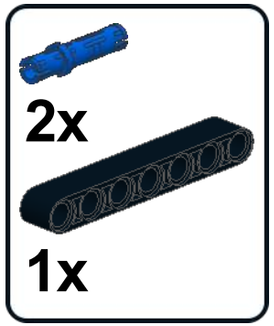

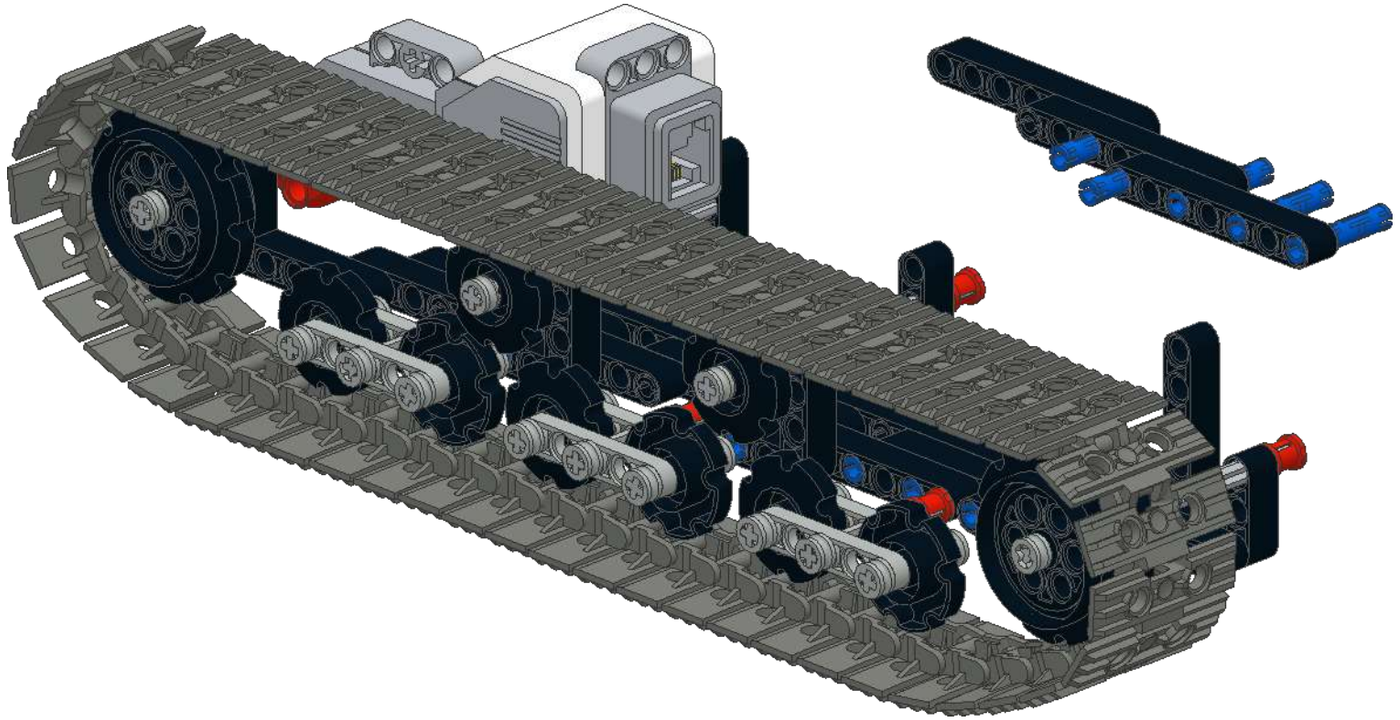

36

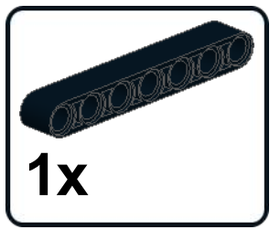

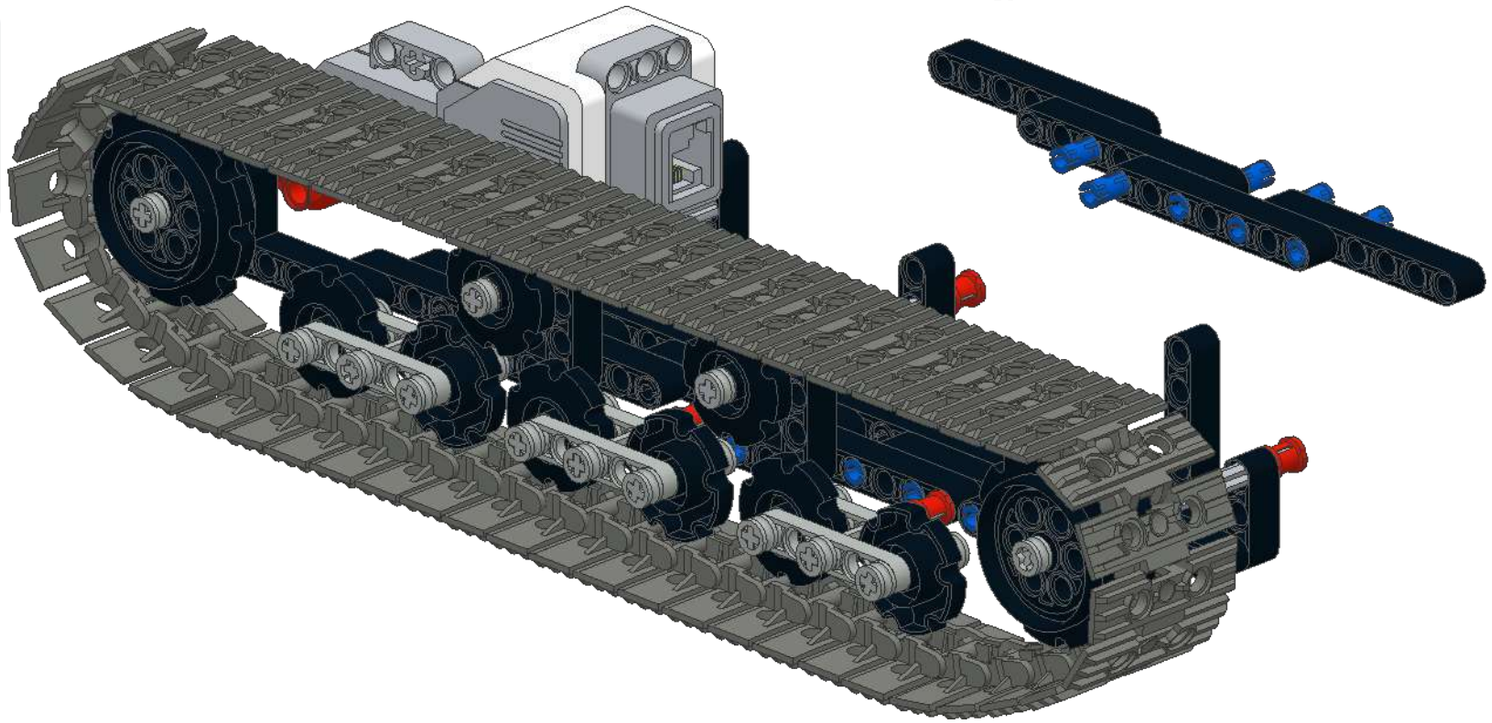

37

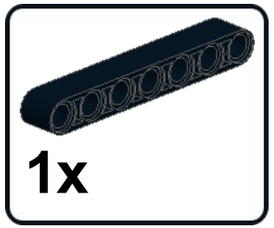

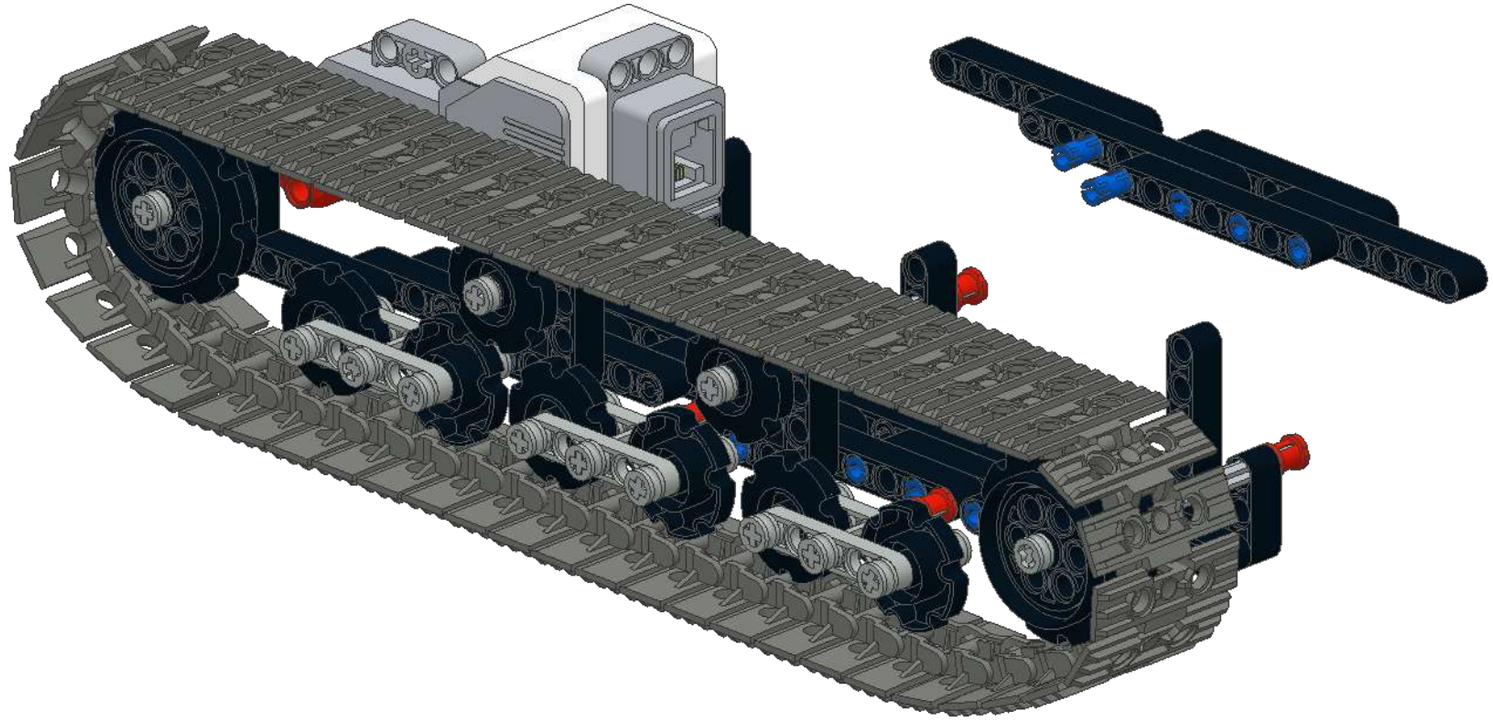

38

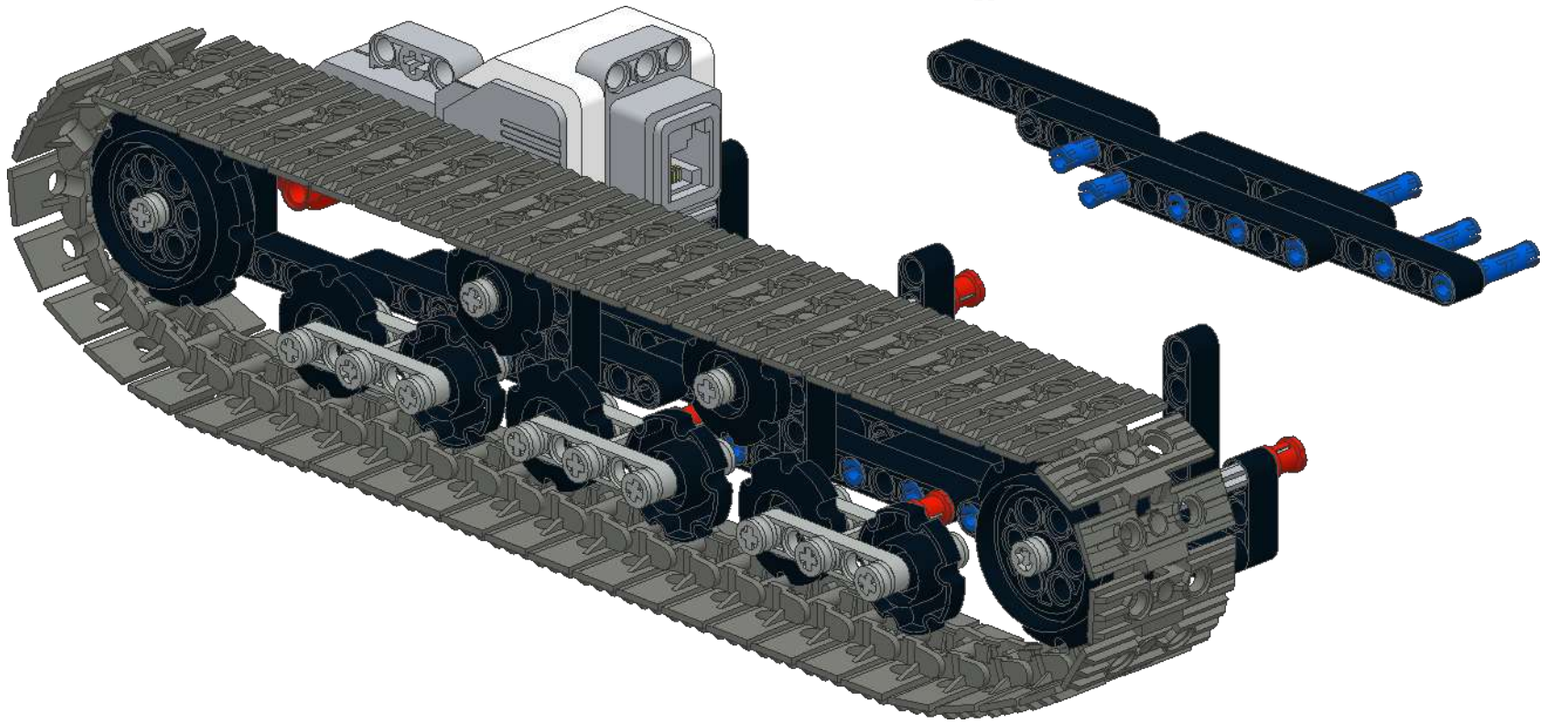

39

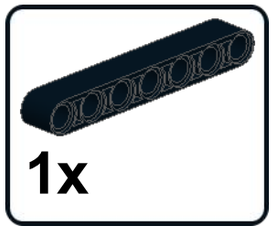

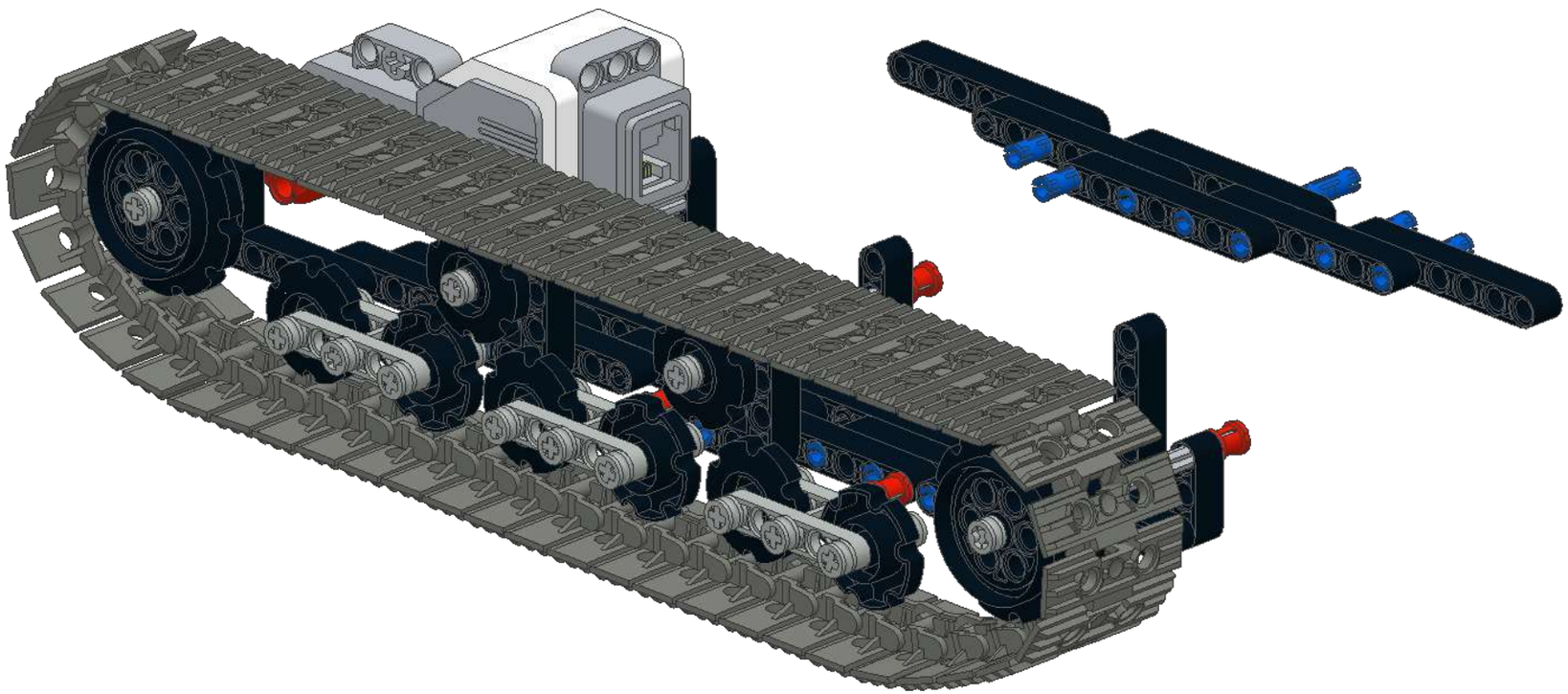

40

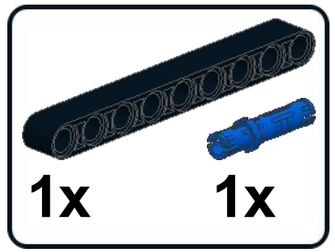

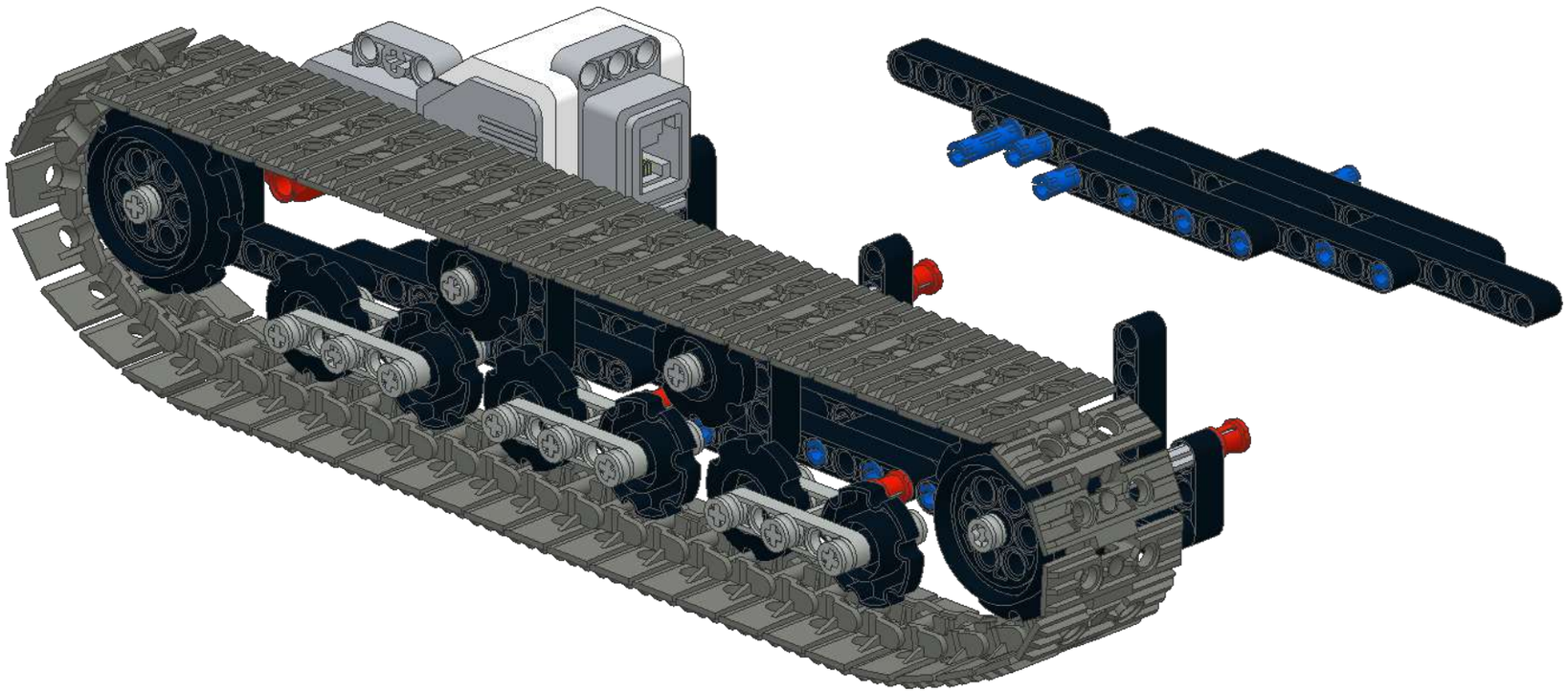

41

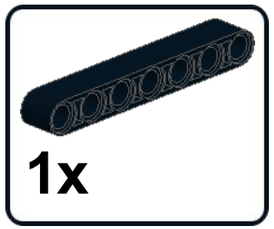

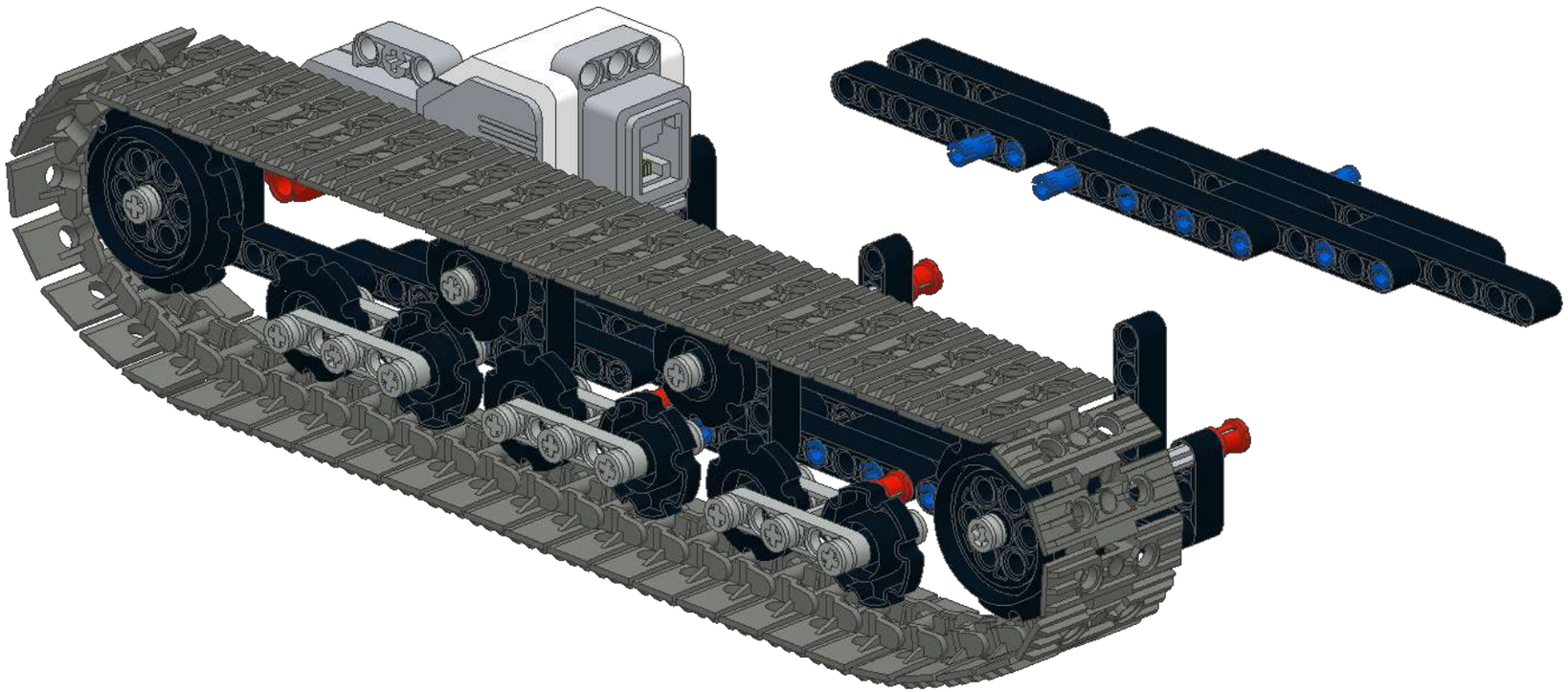

42

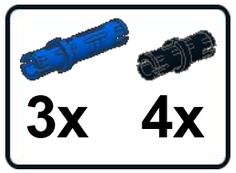

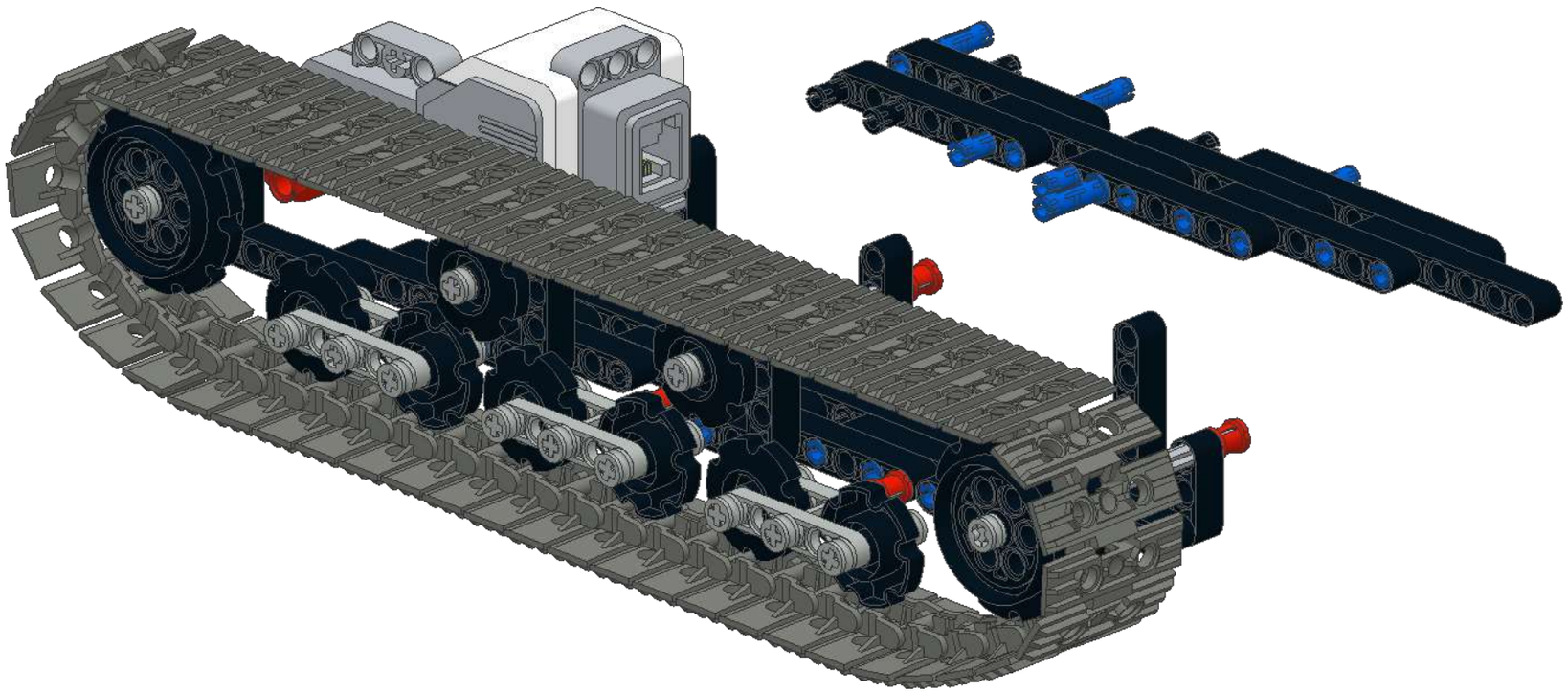

43

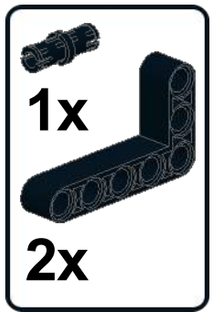

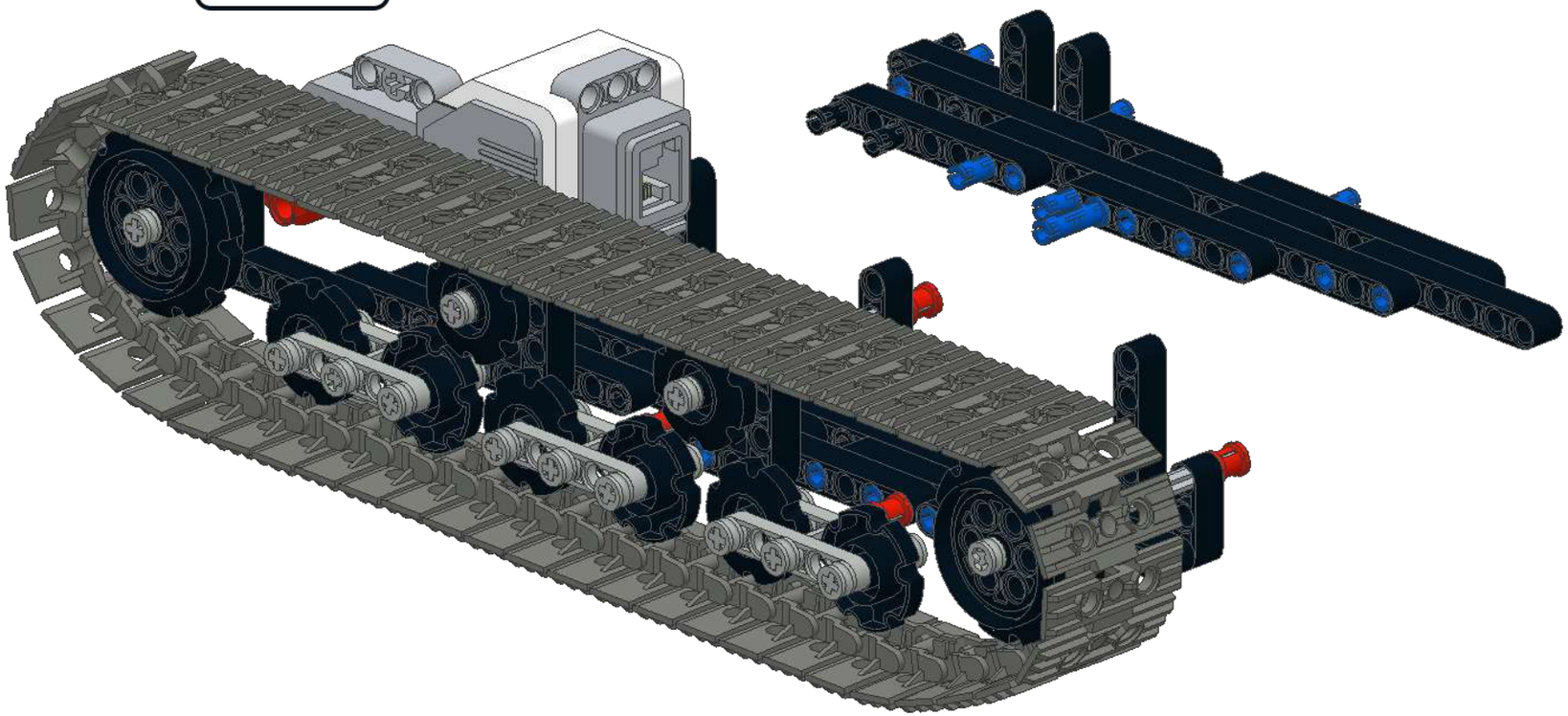

44

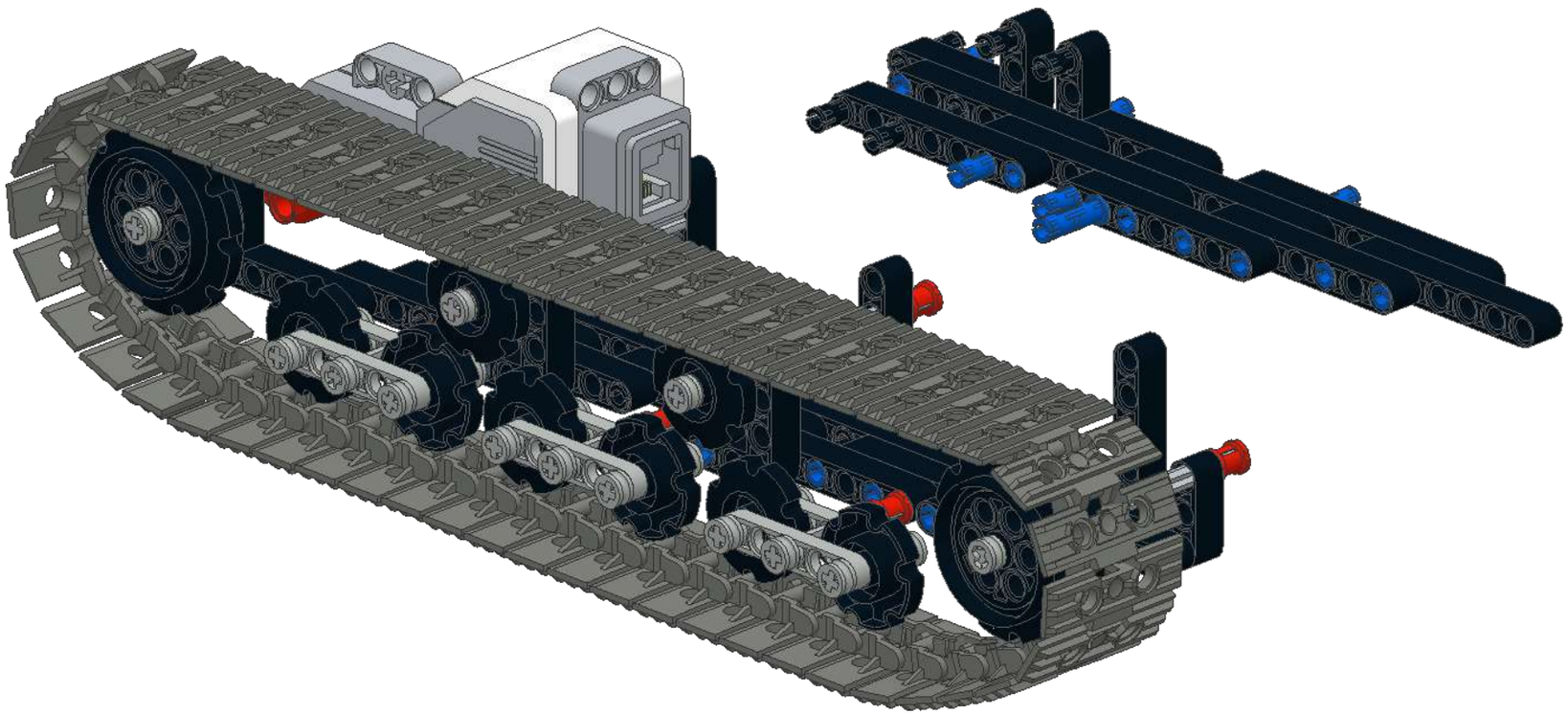

45

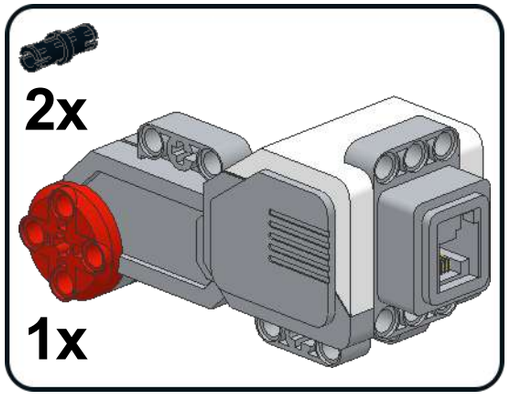

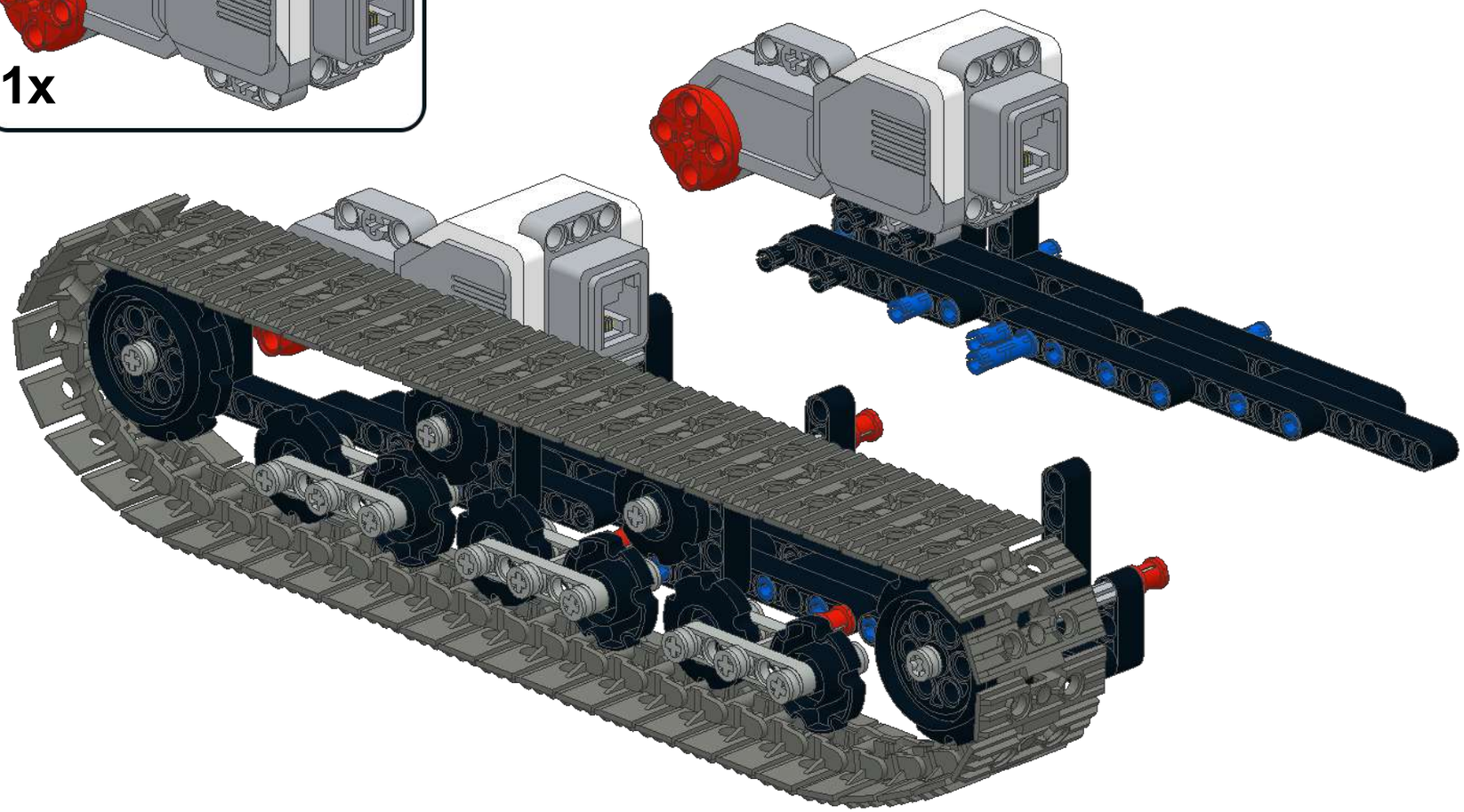

46

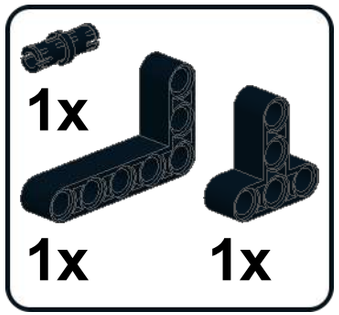

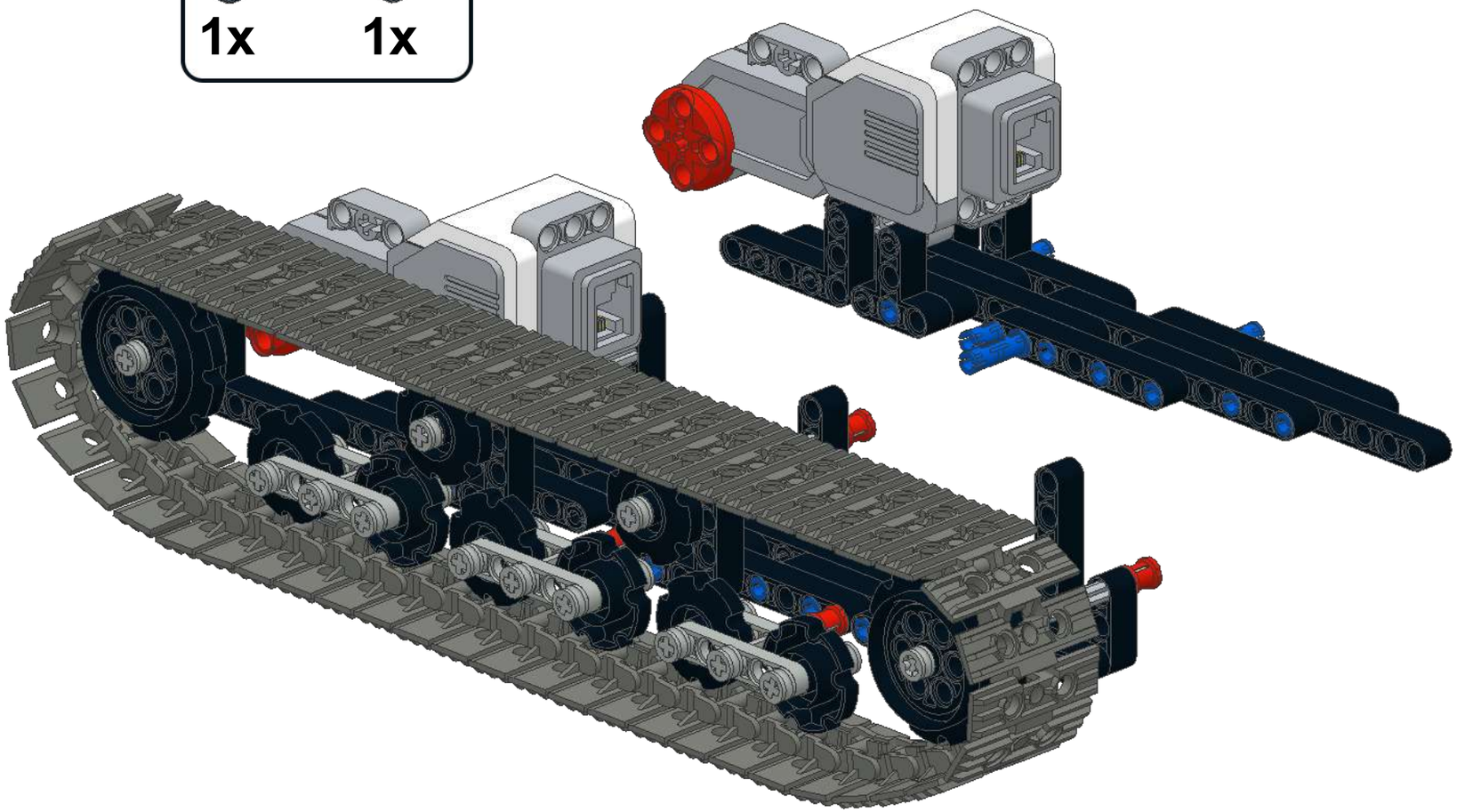

47

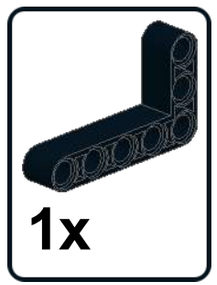

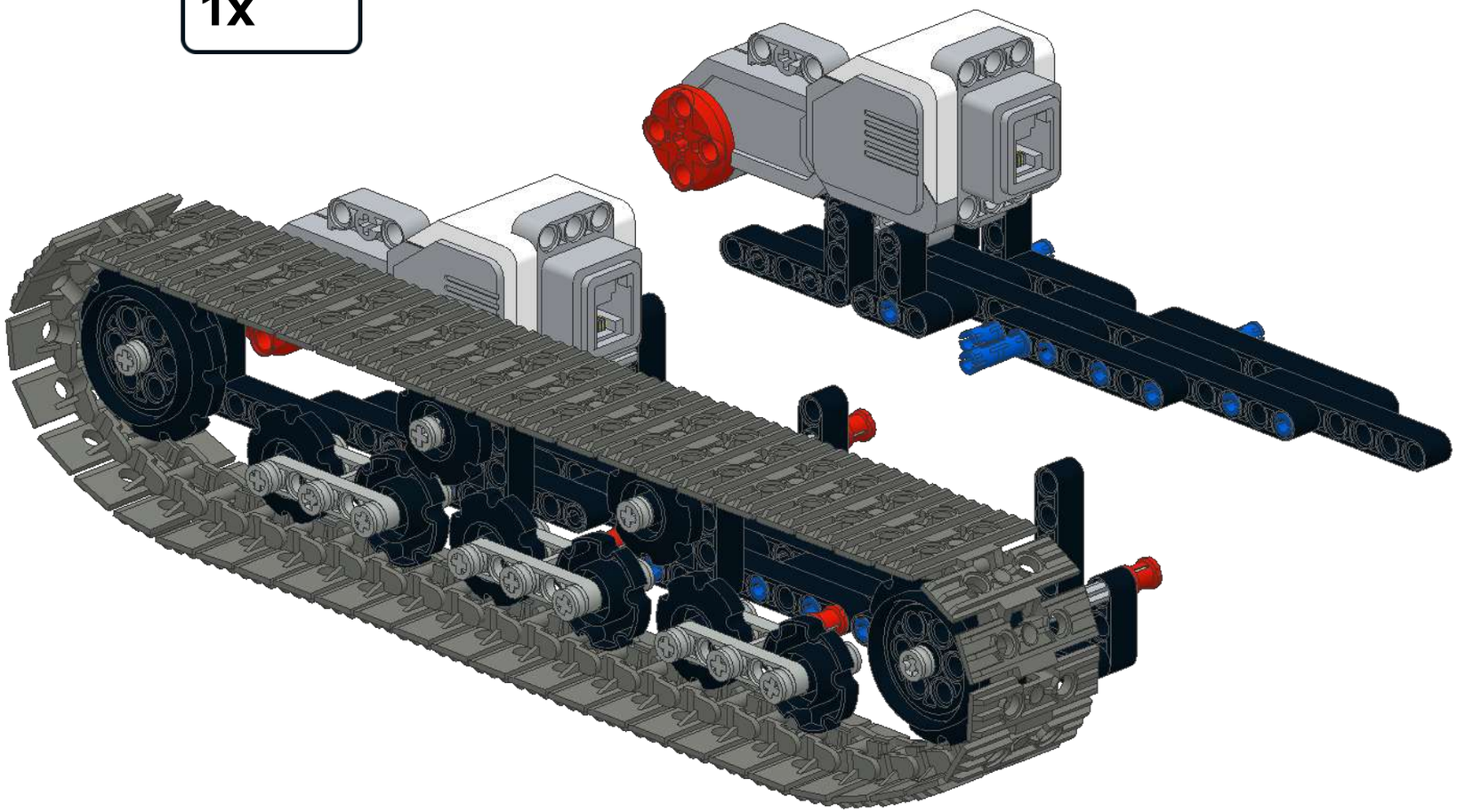

48

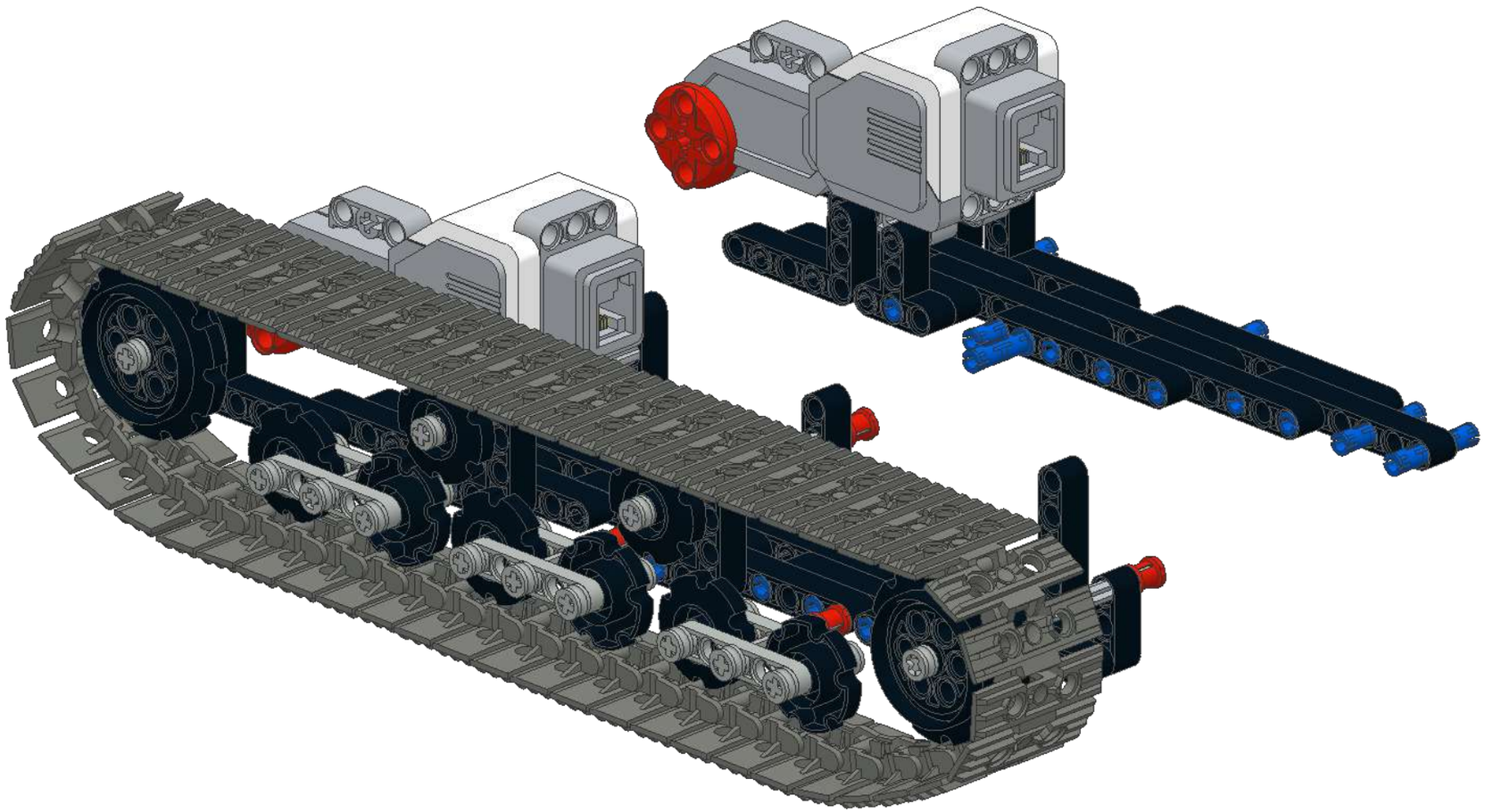

49

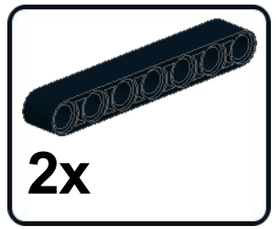

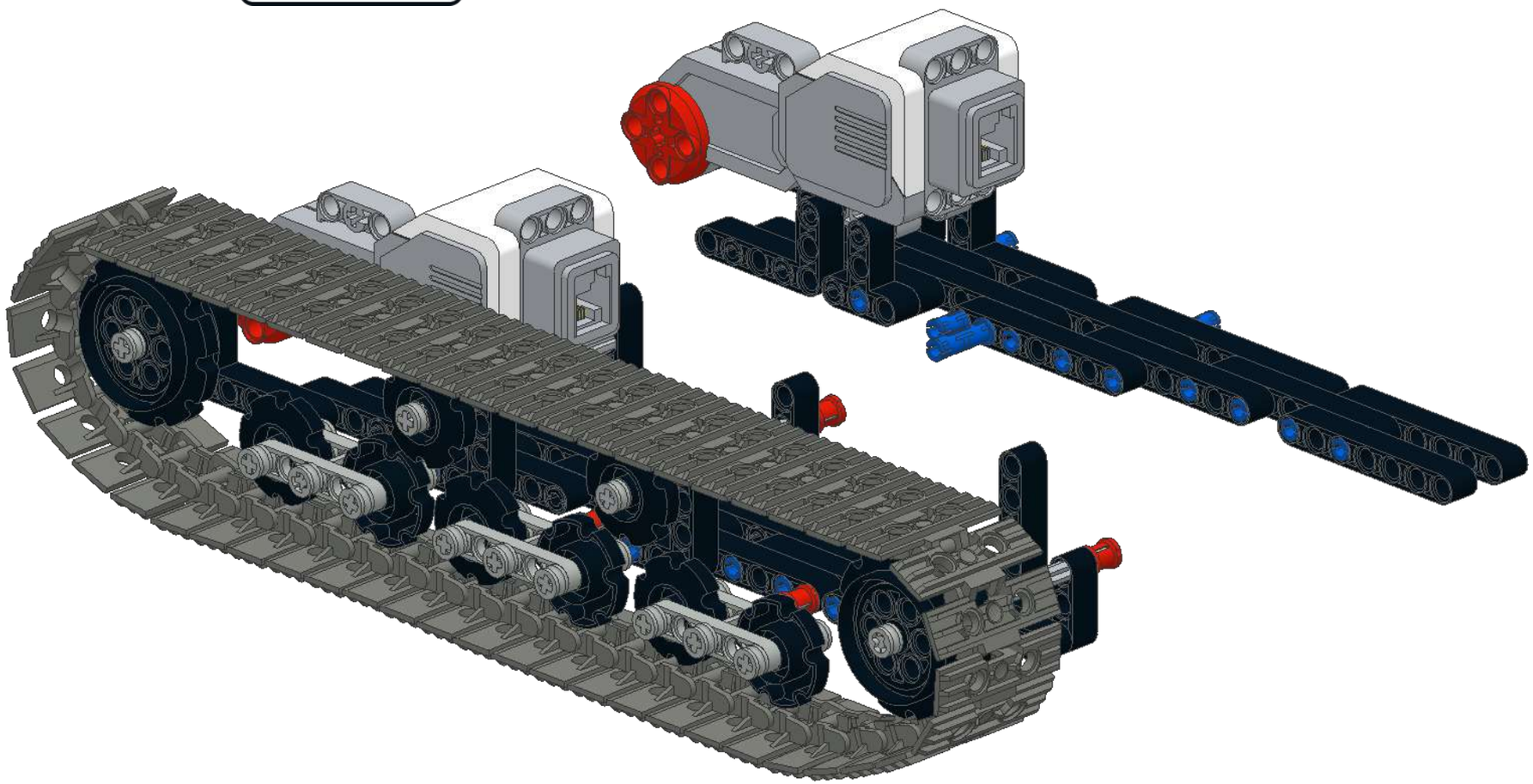

50

1x 3x

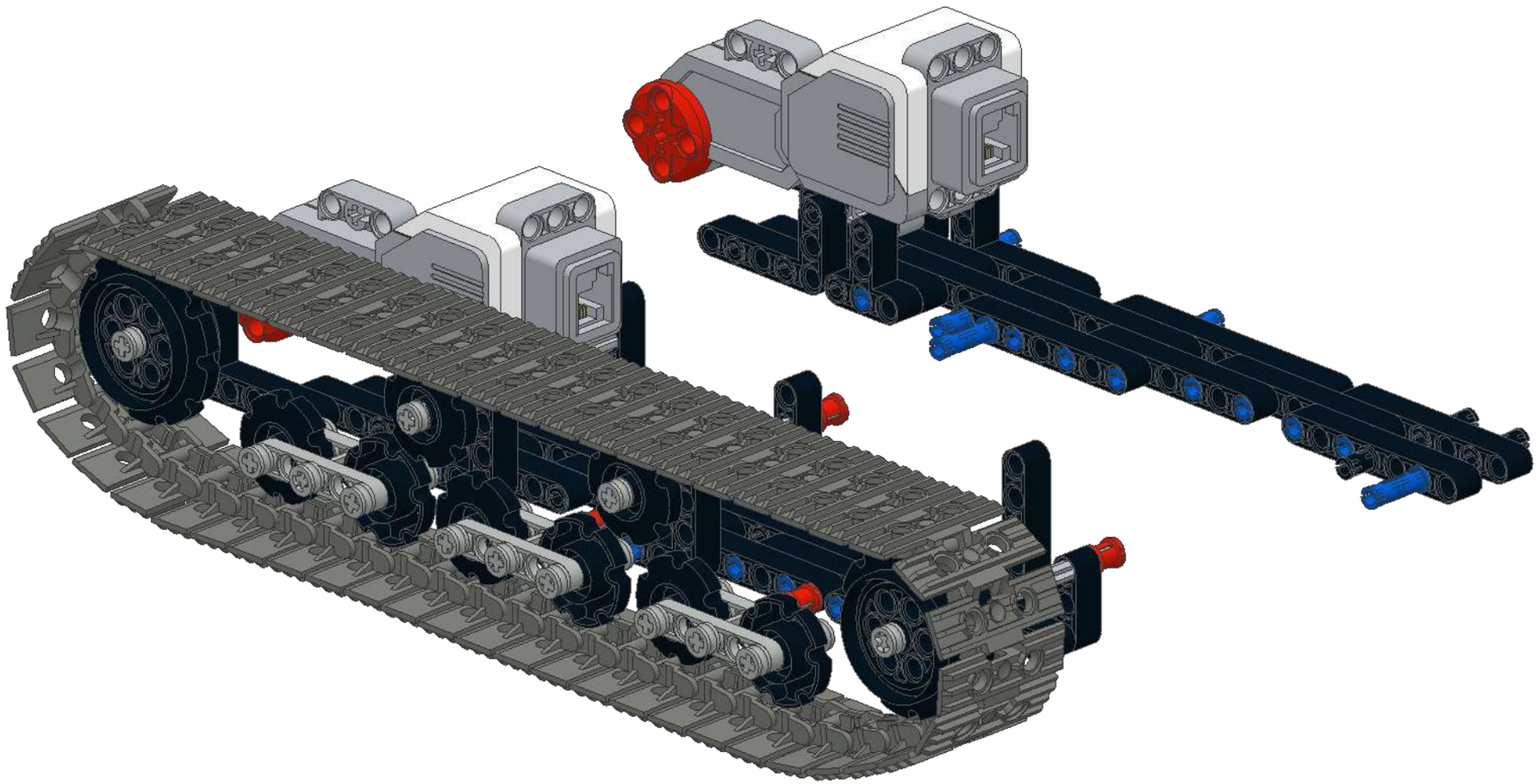

51

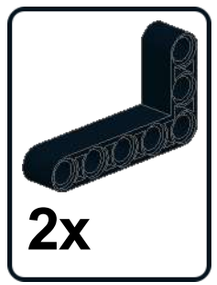

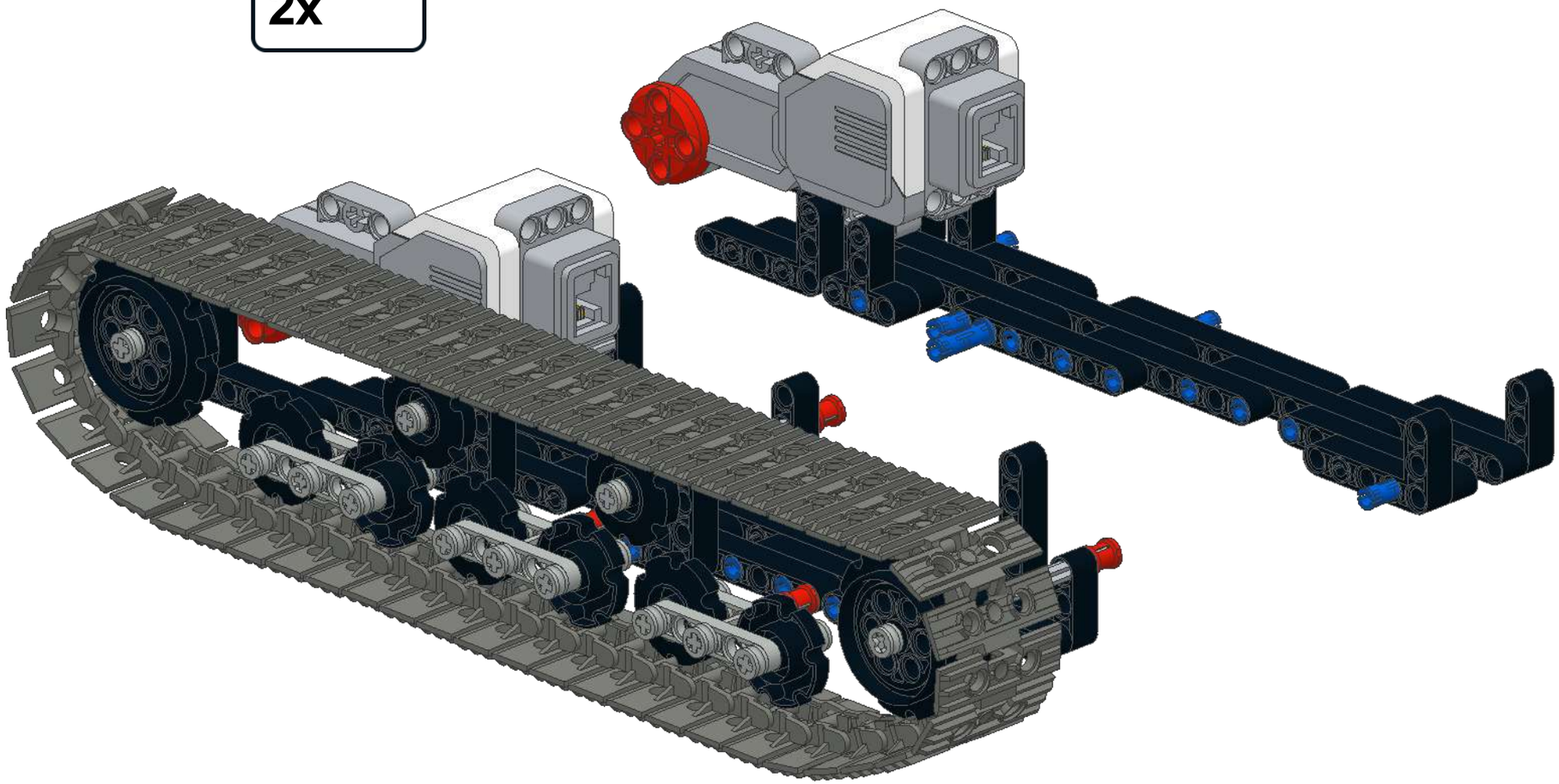

52

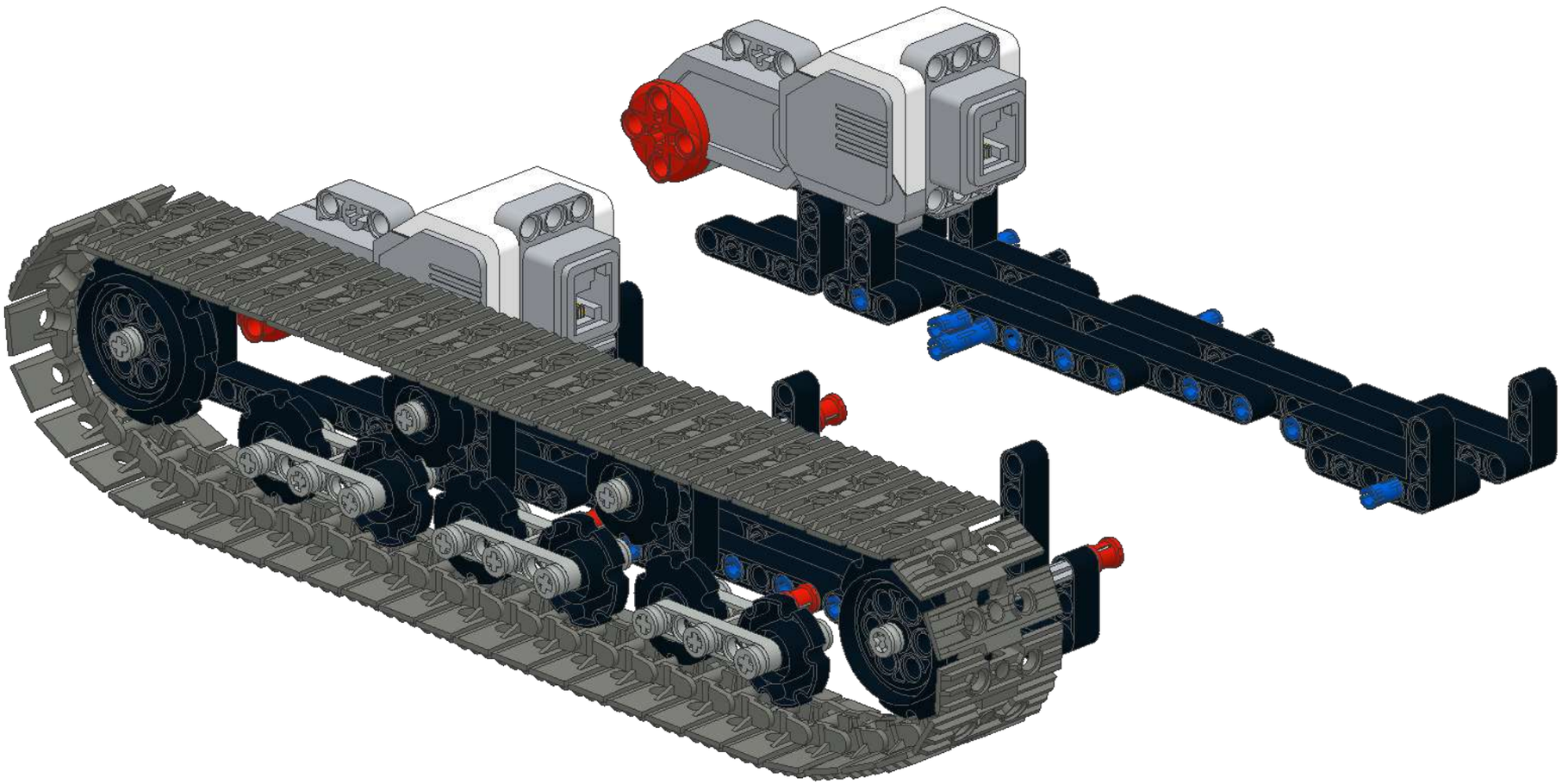

53

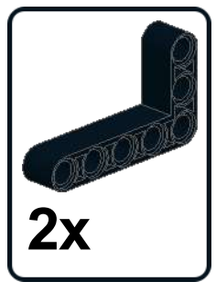

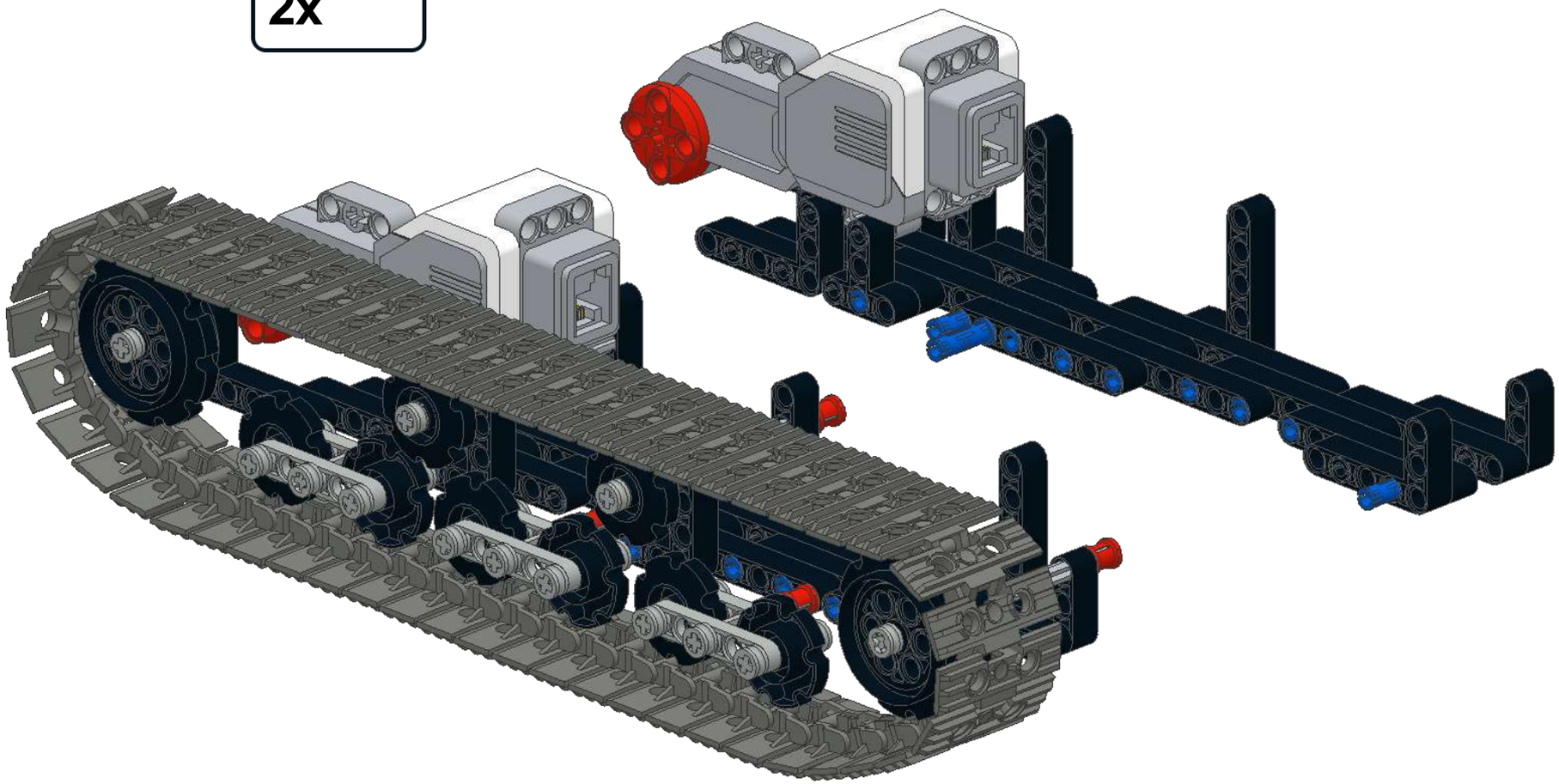

54

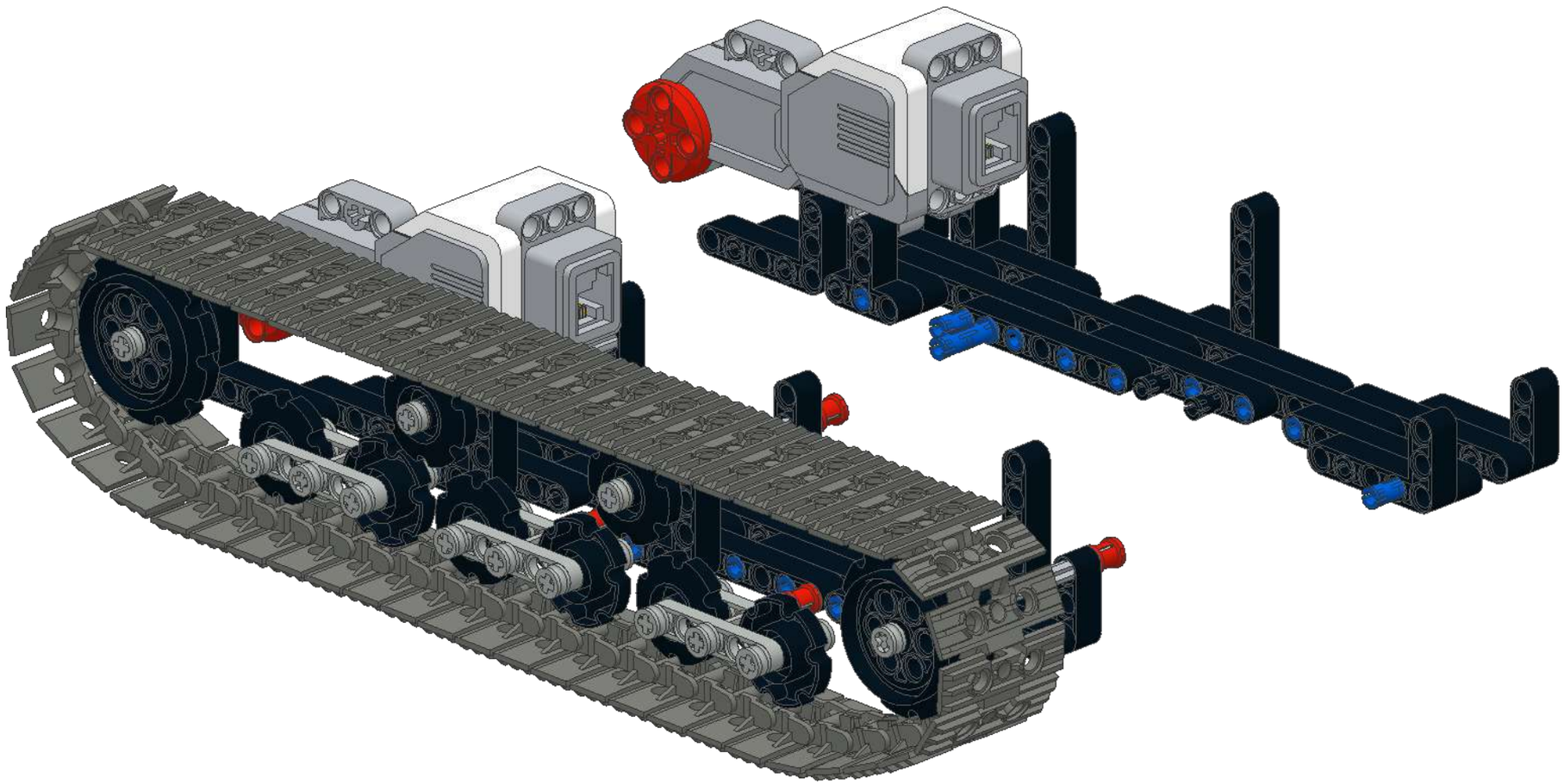

55

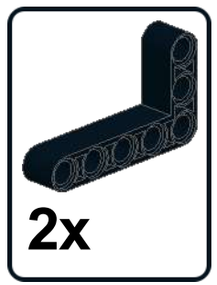

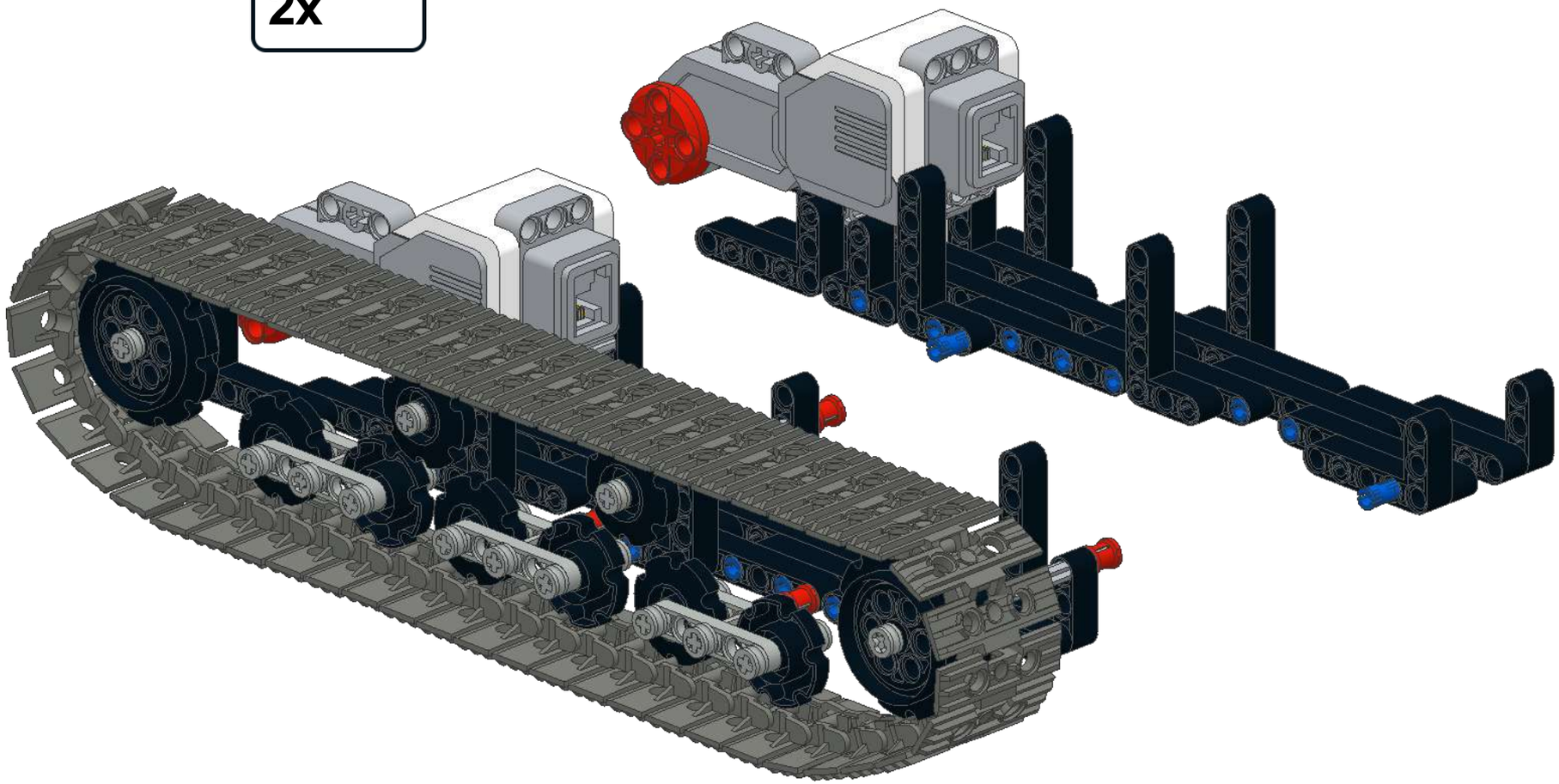

56

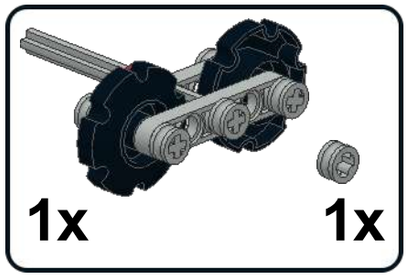

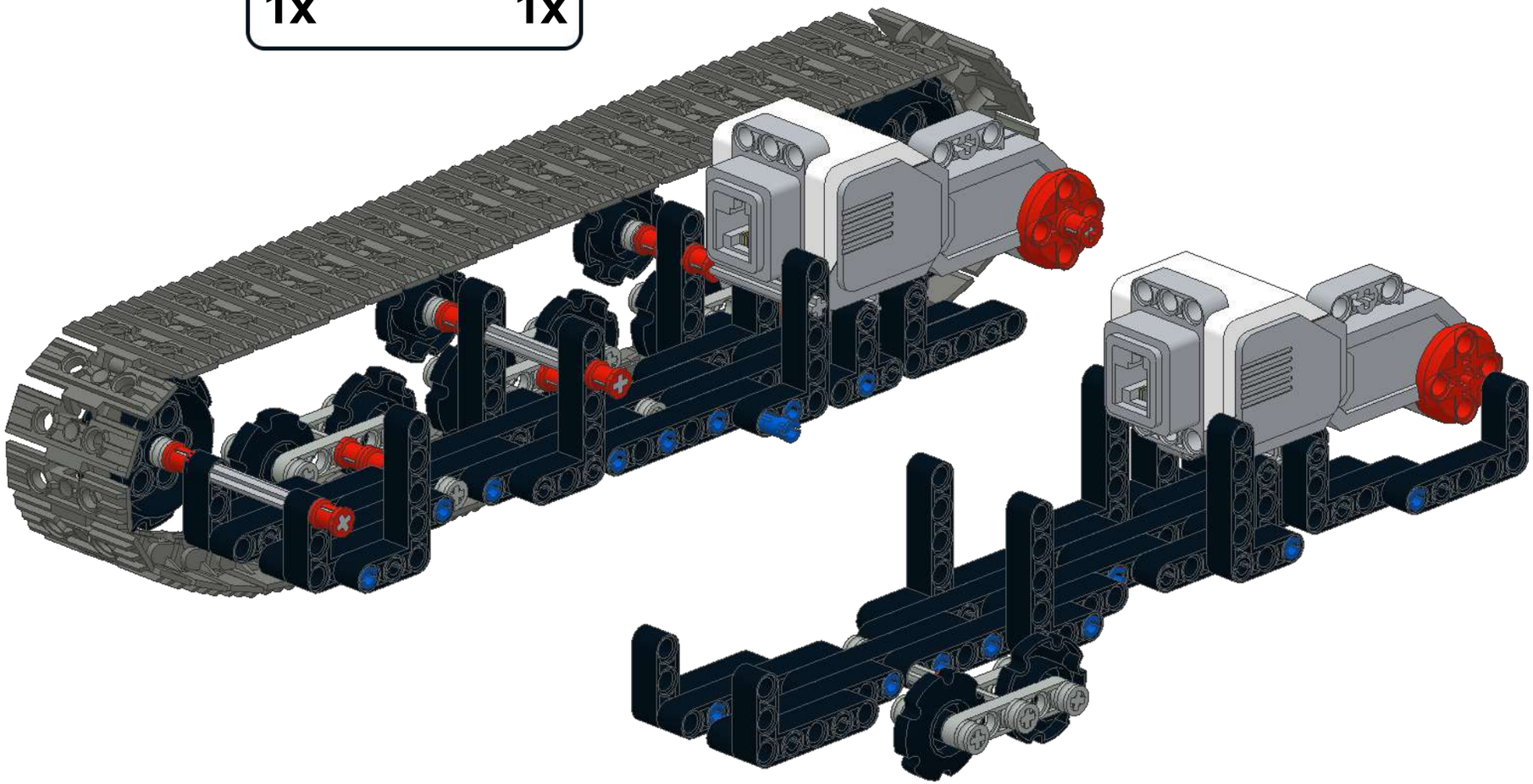

57

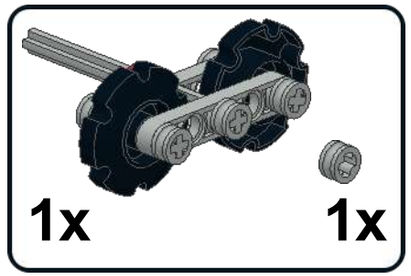

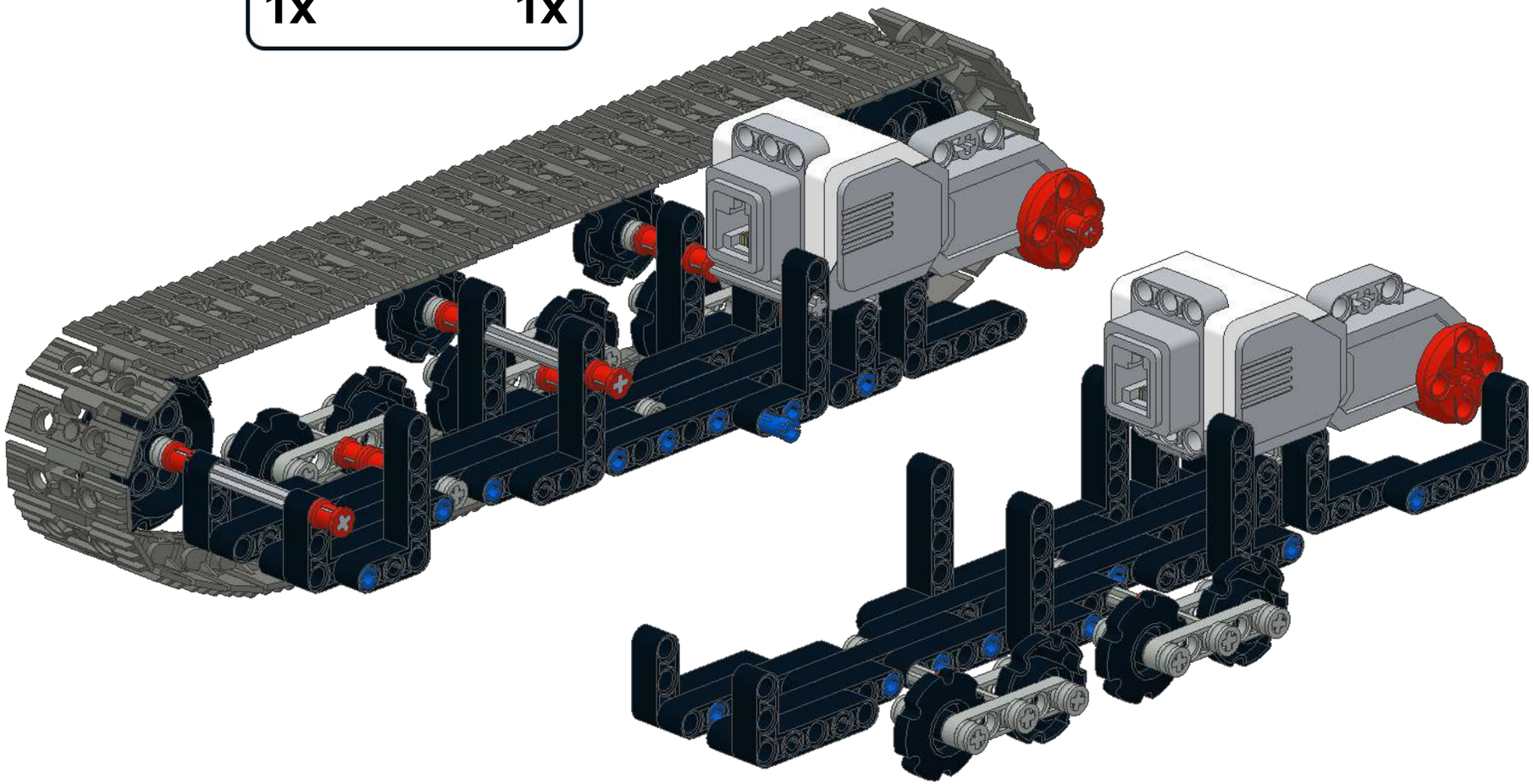

58

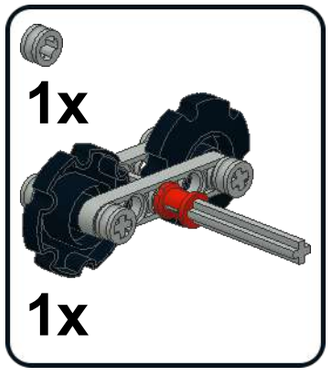

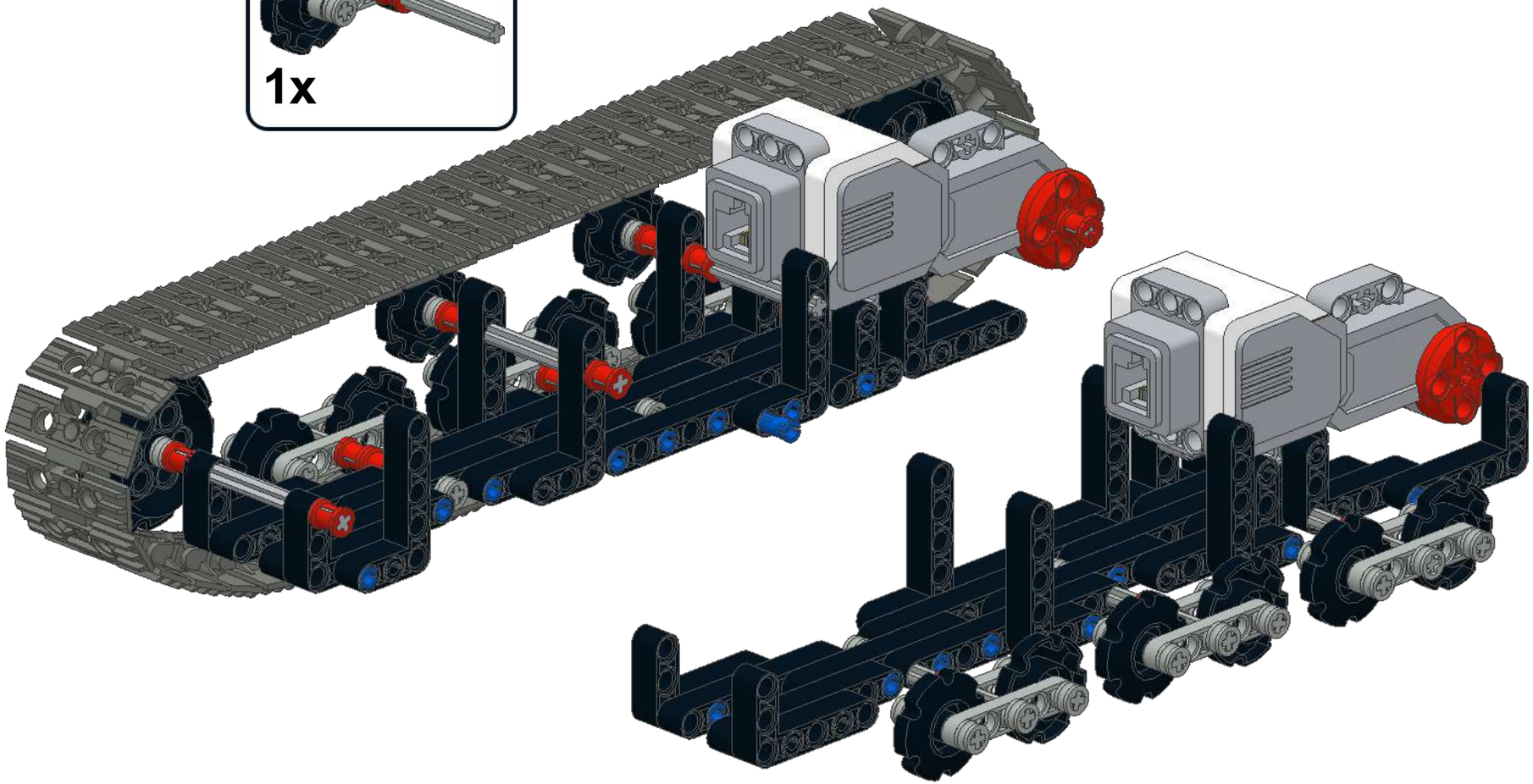

59

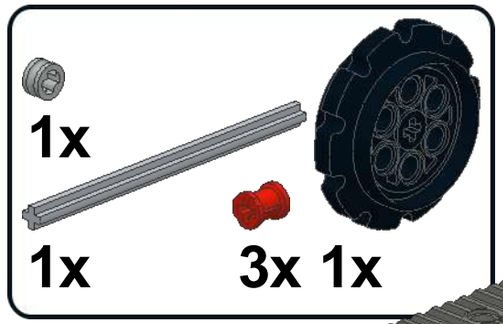

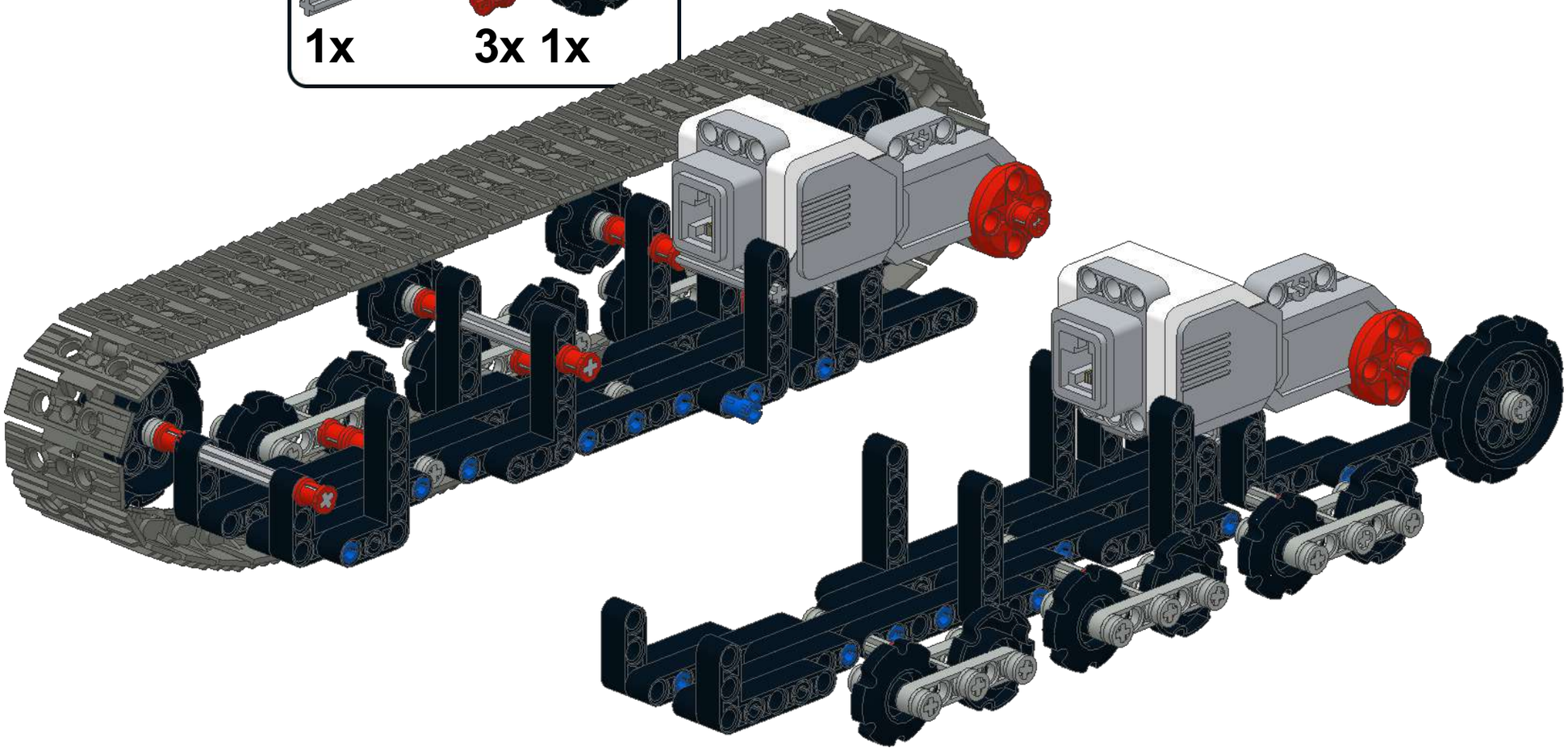

60

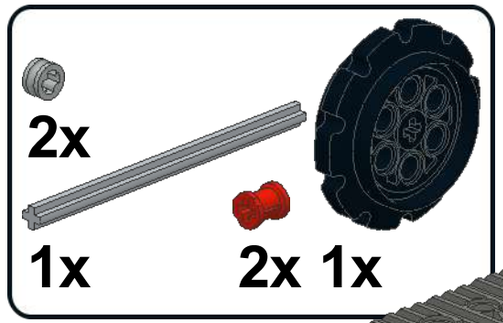

61

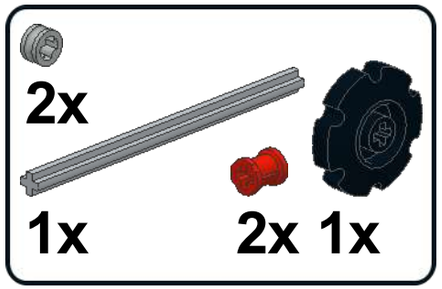

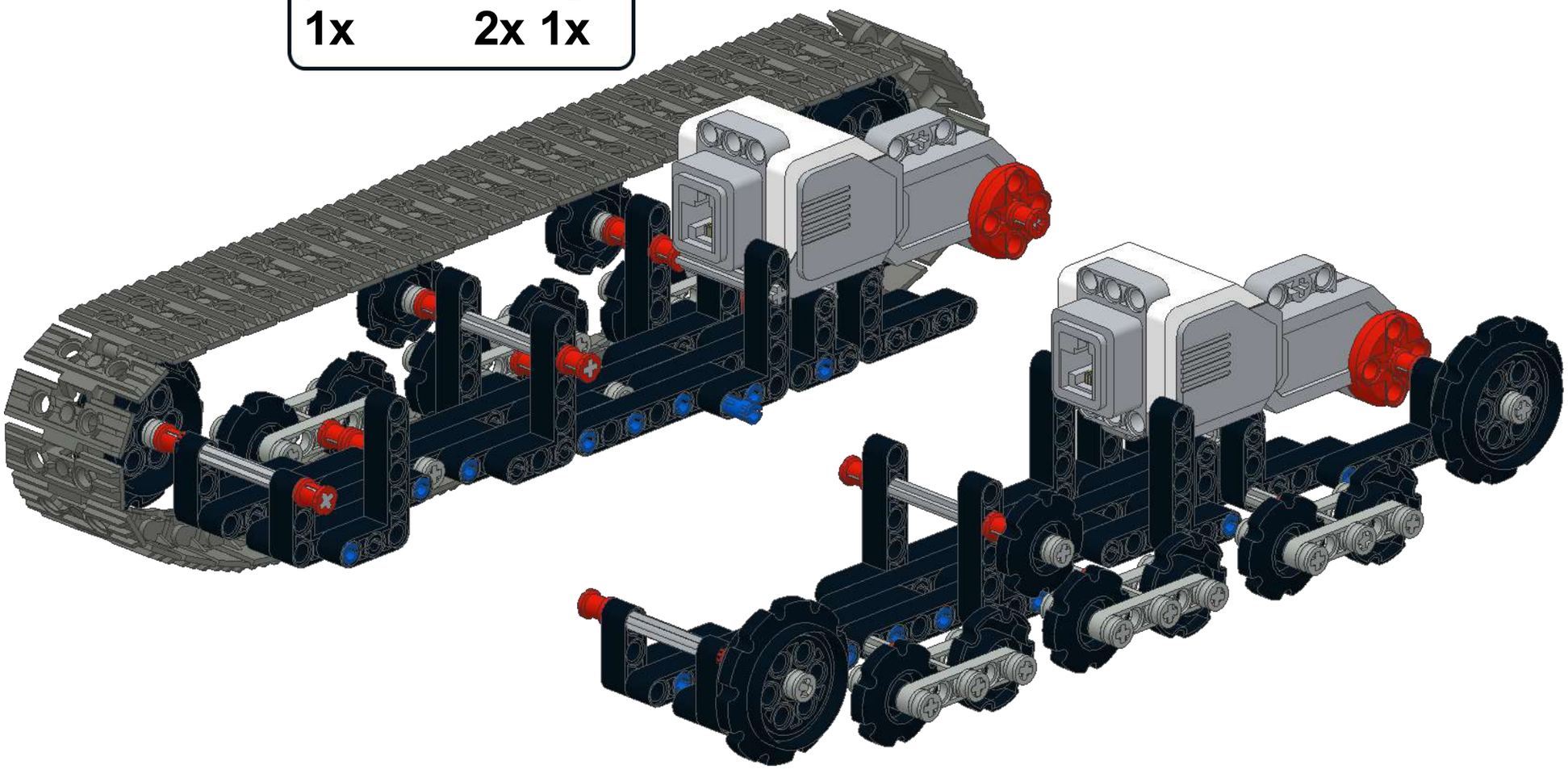

62

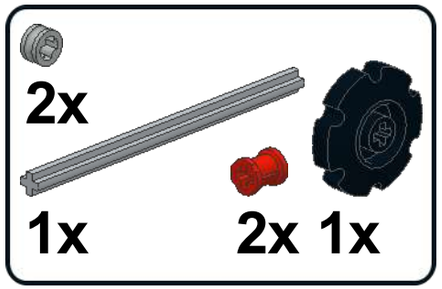

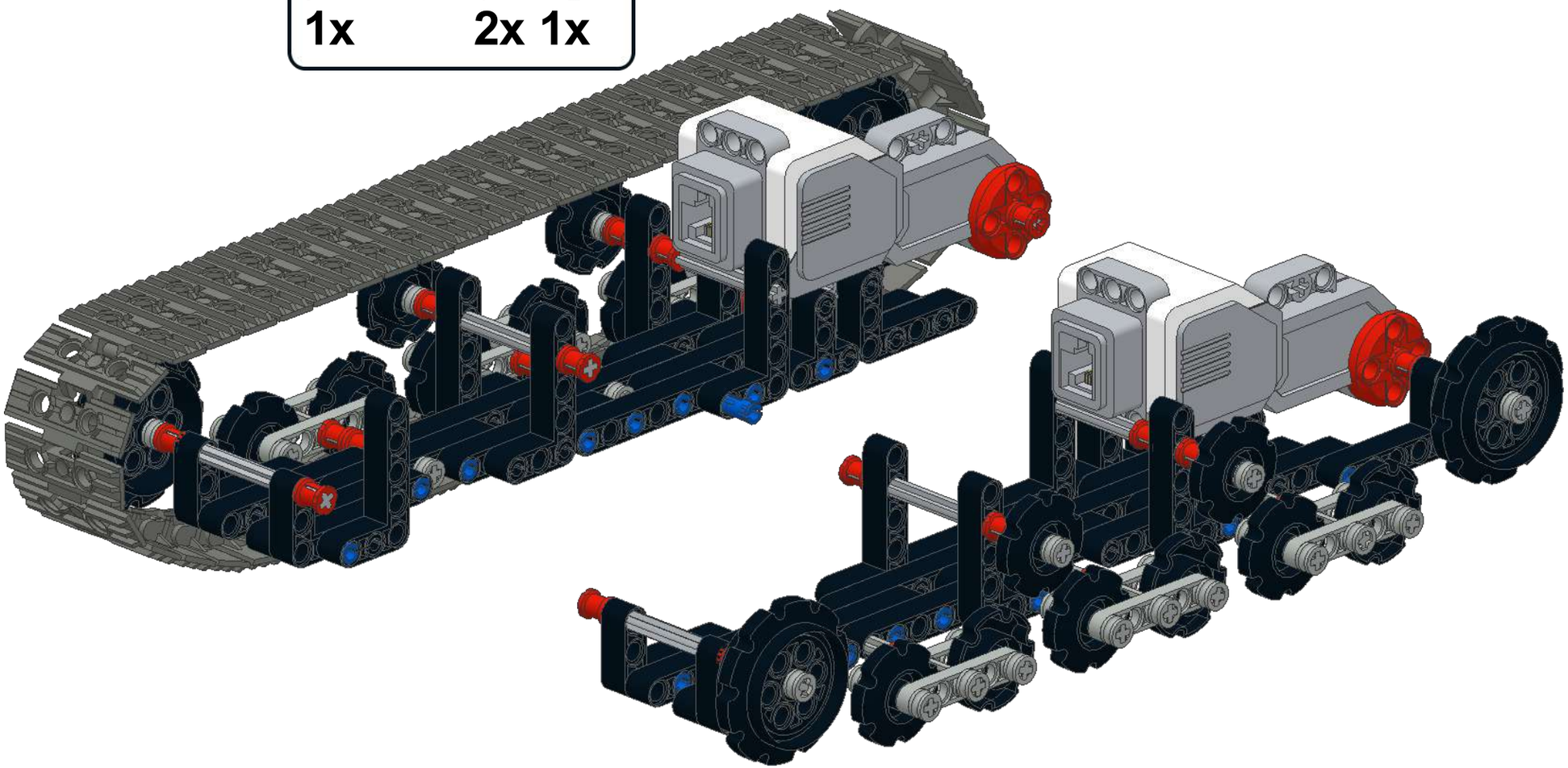

63 1x

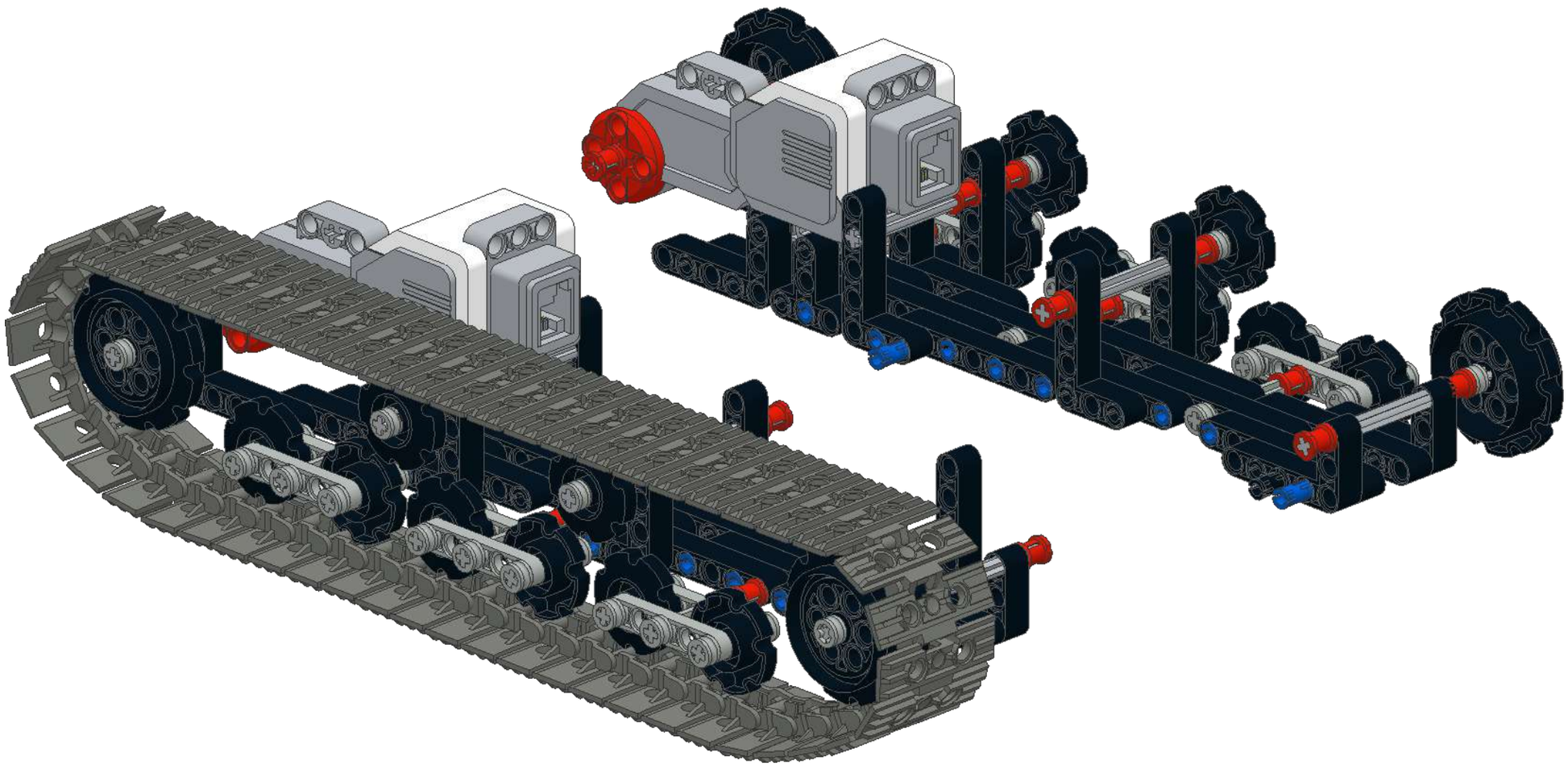

64

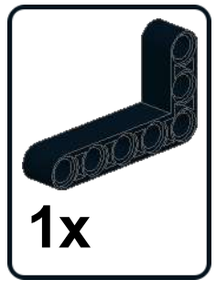

1x

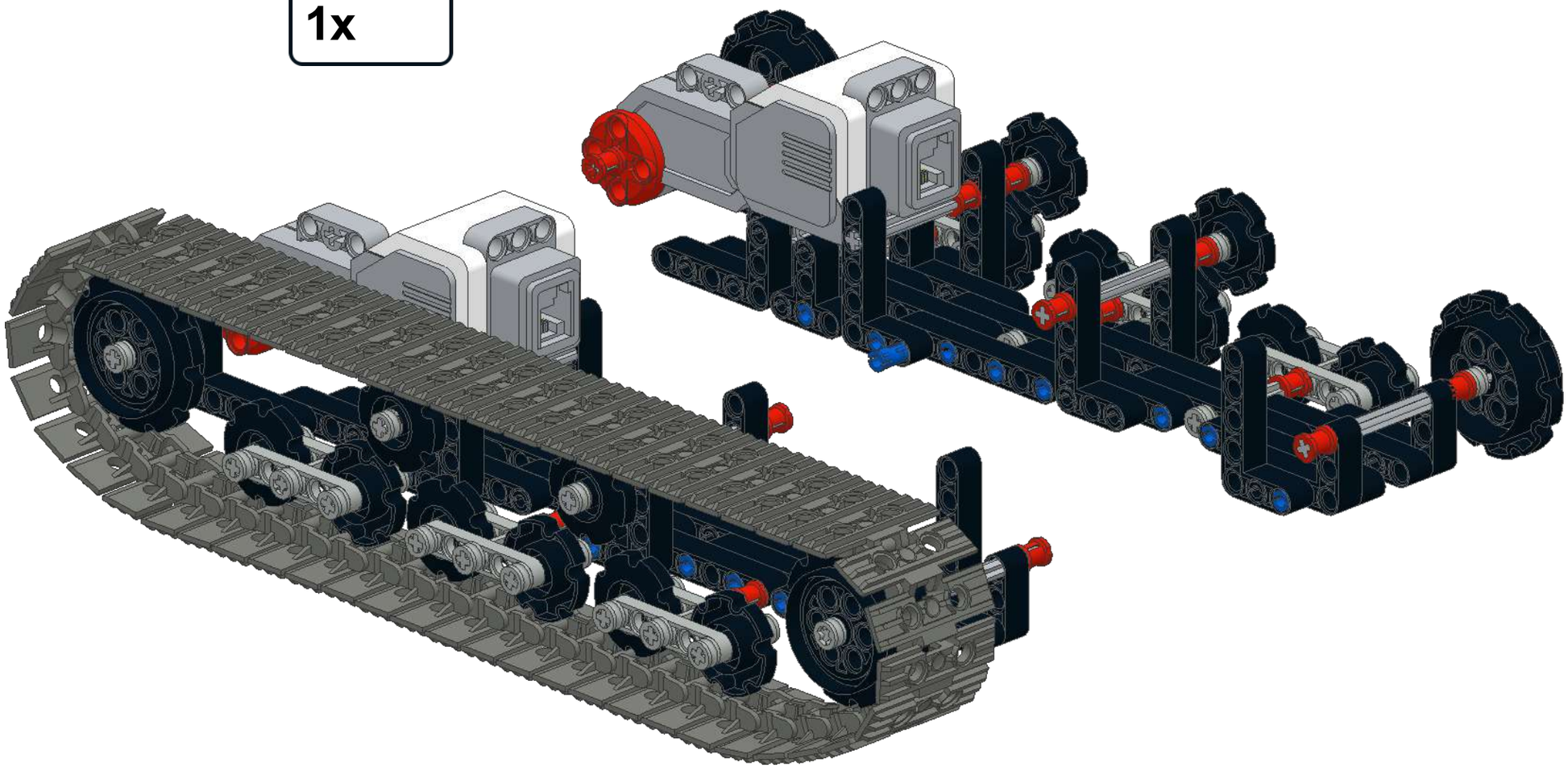

65

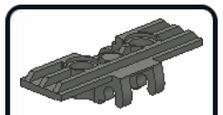

52x

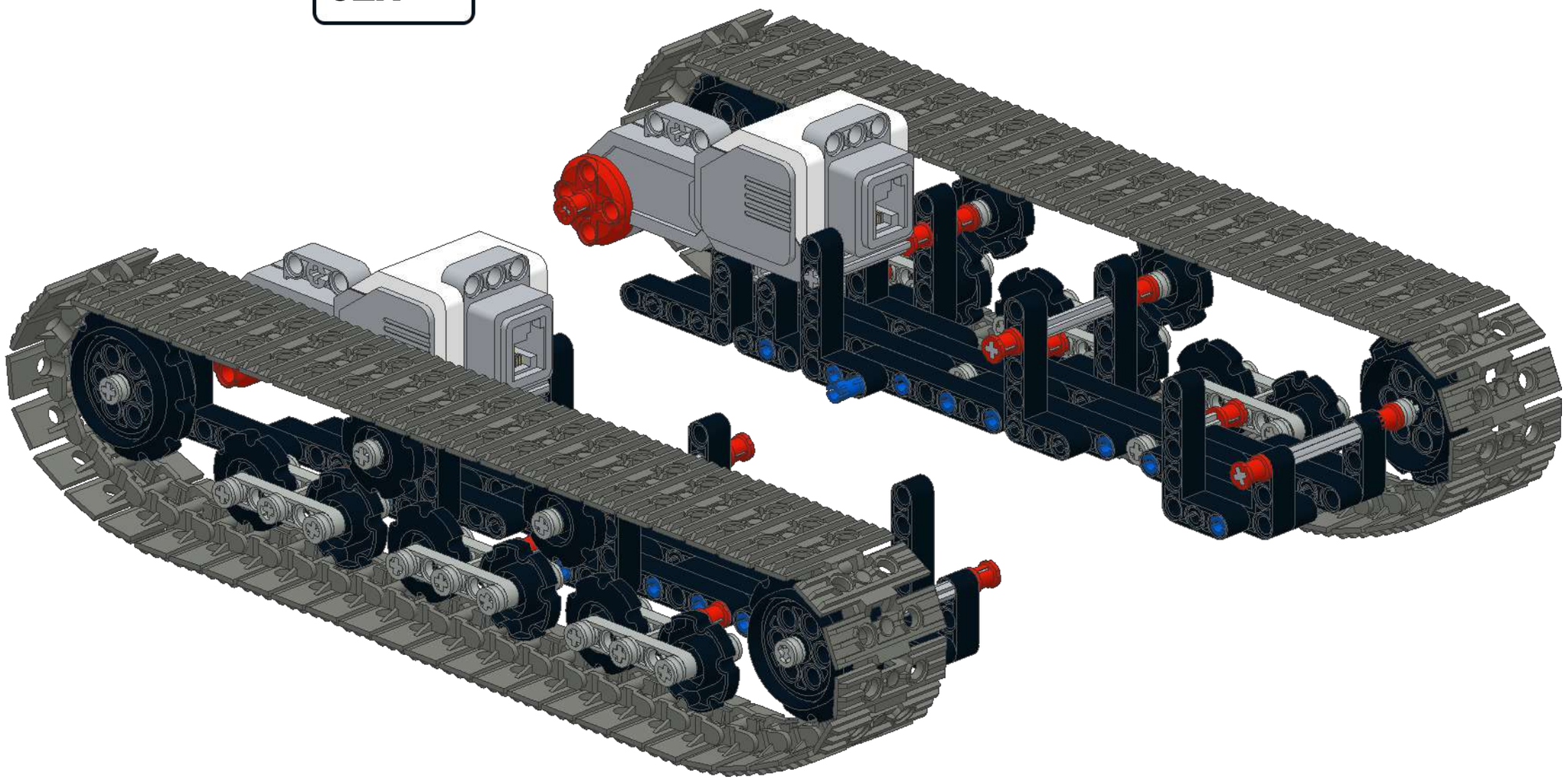

66

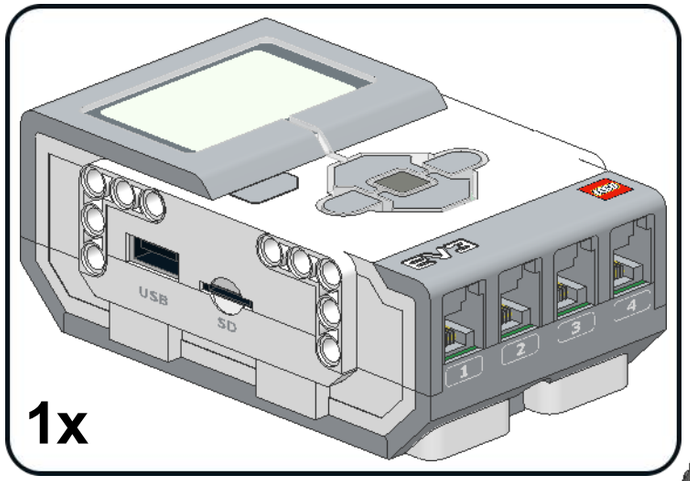

1x

67 8x

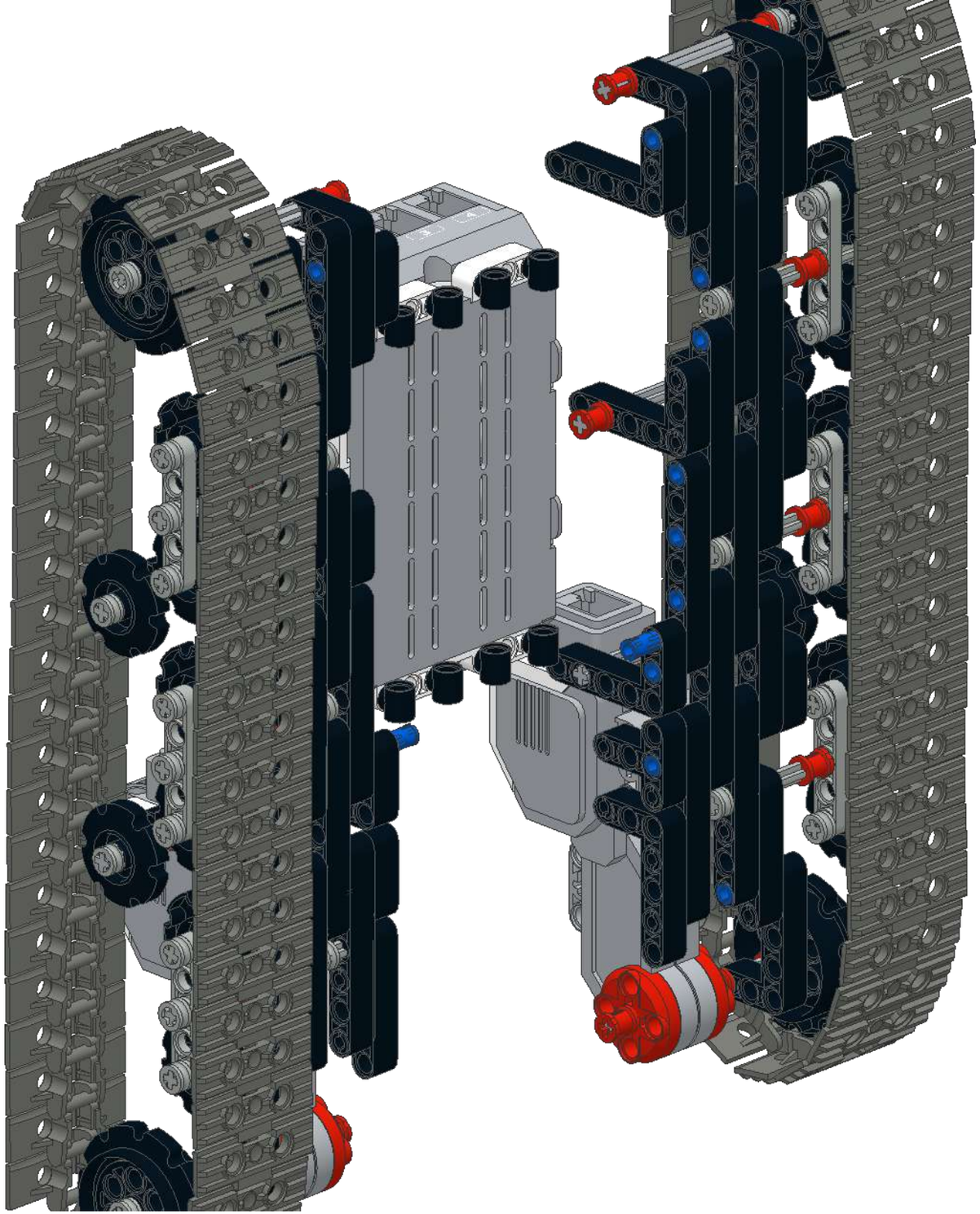

68 8x

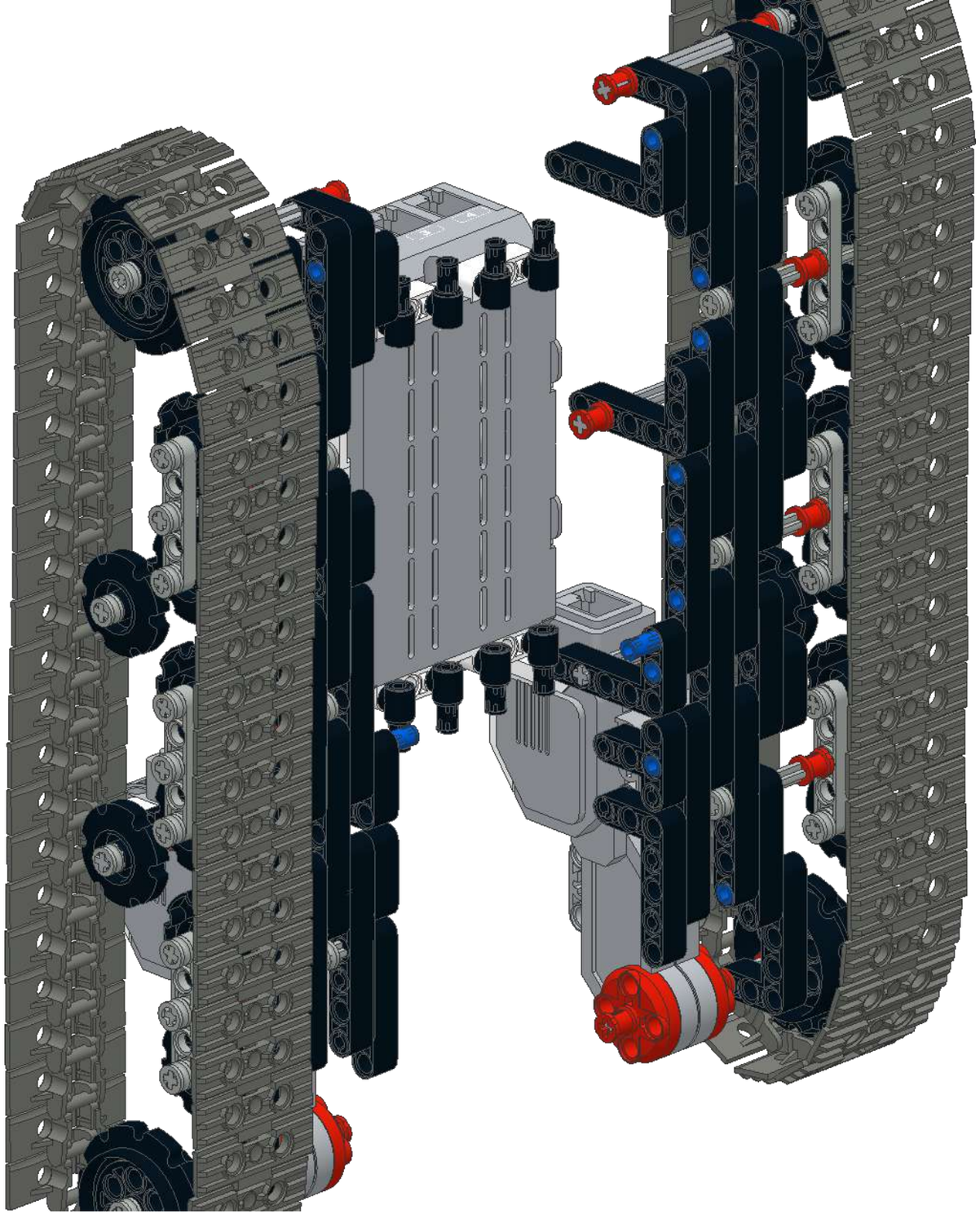

69

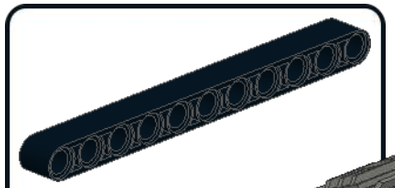

4x

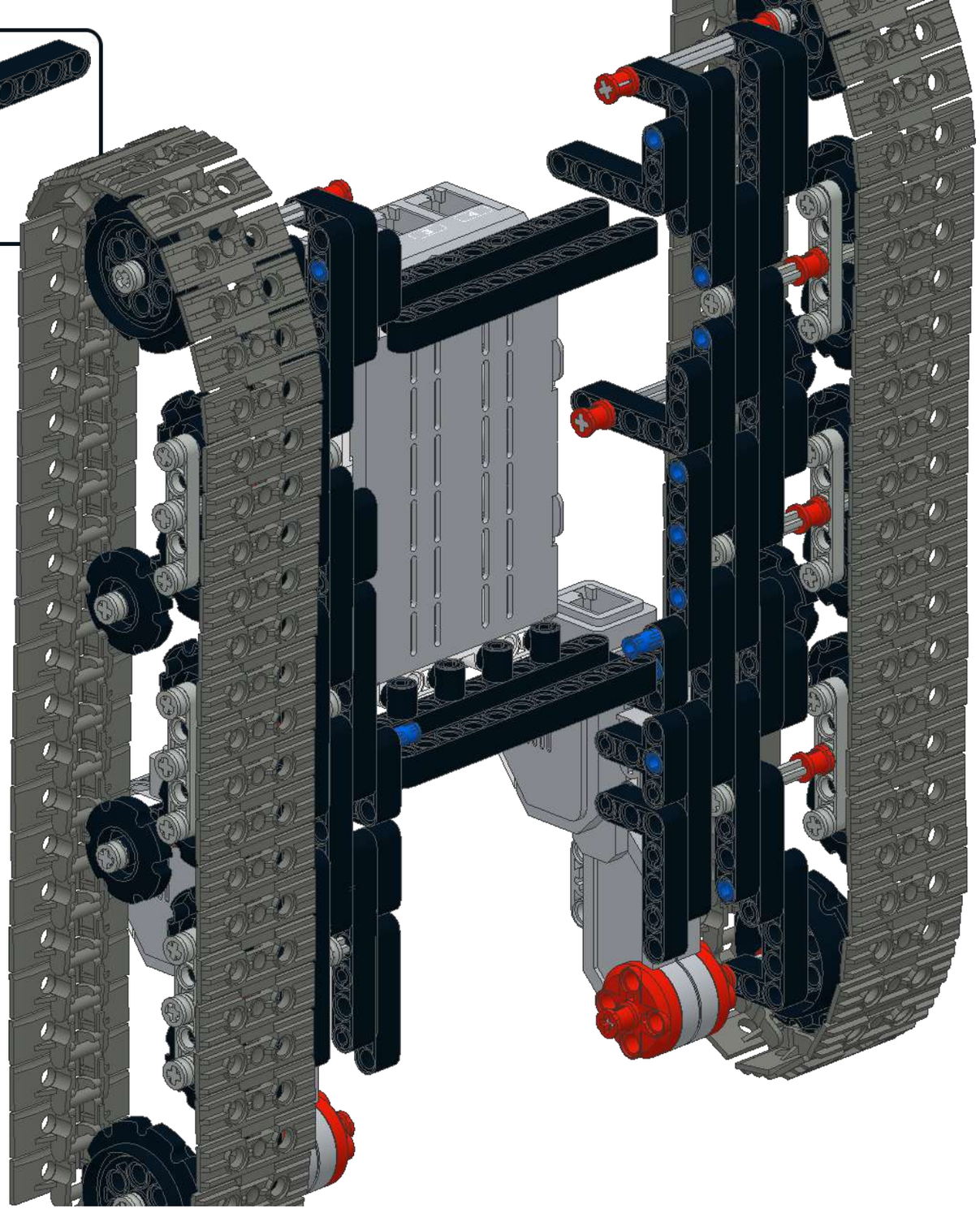

70 3x

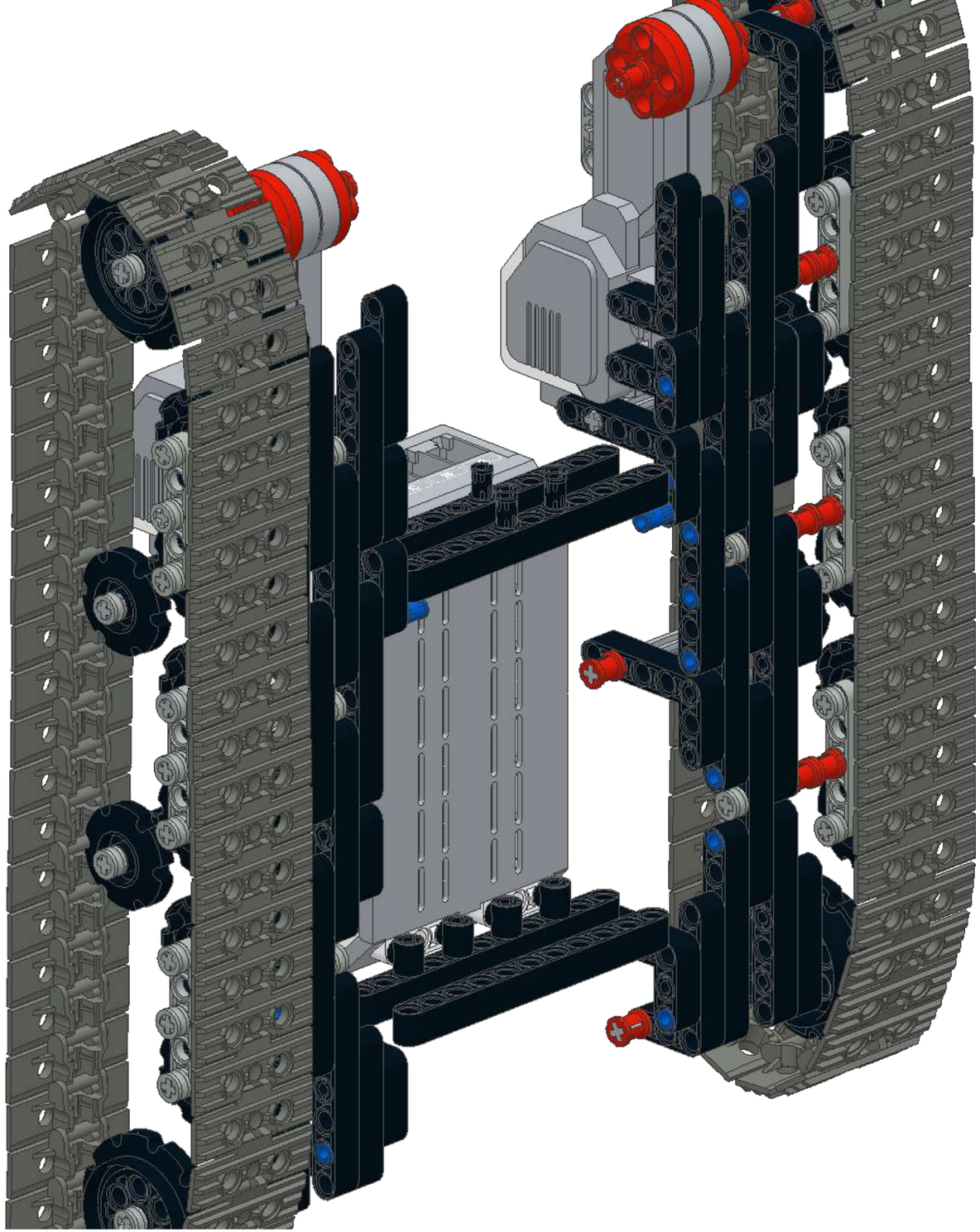

71

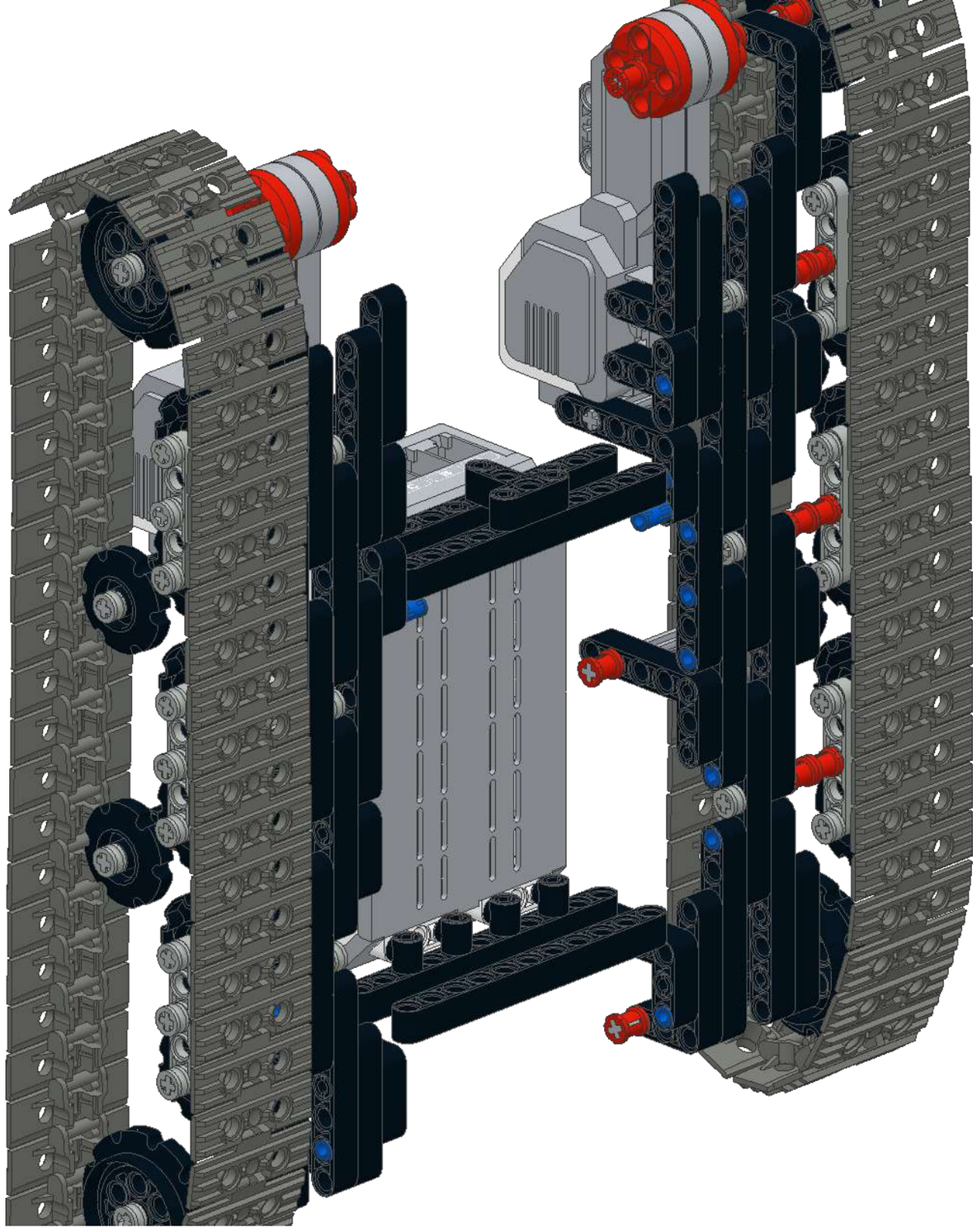

72

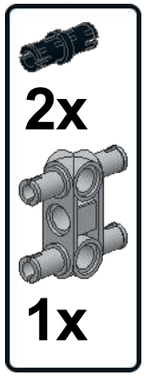

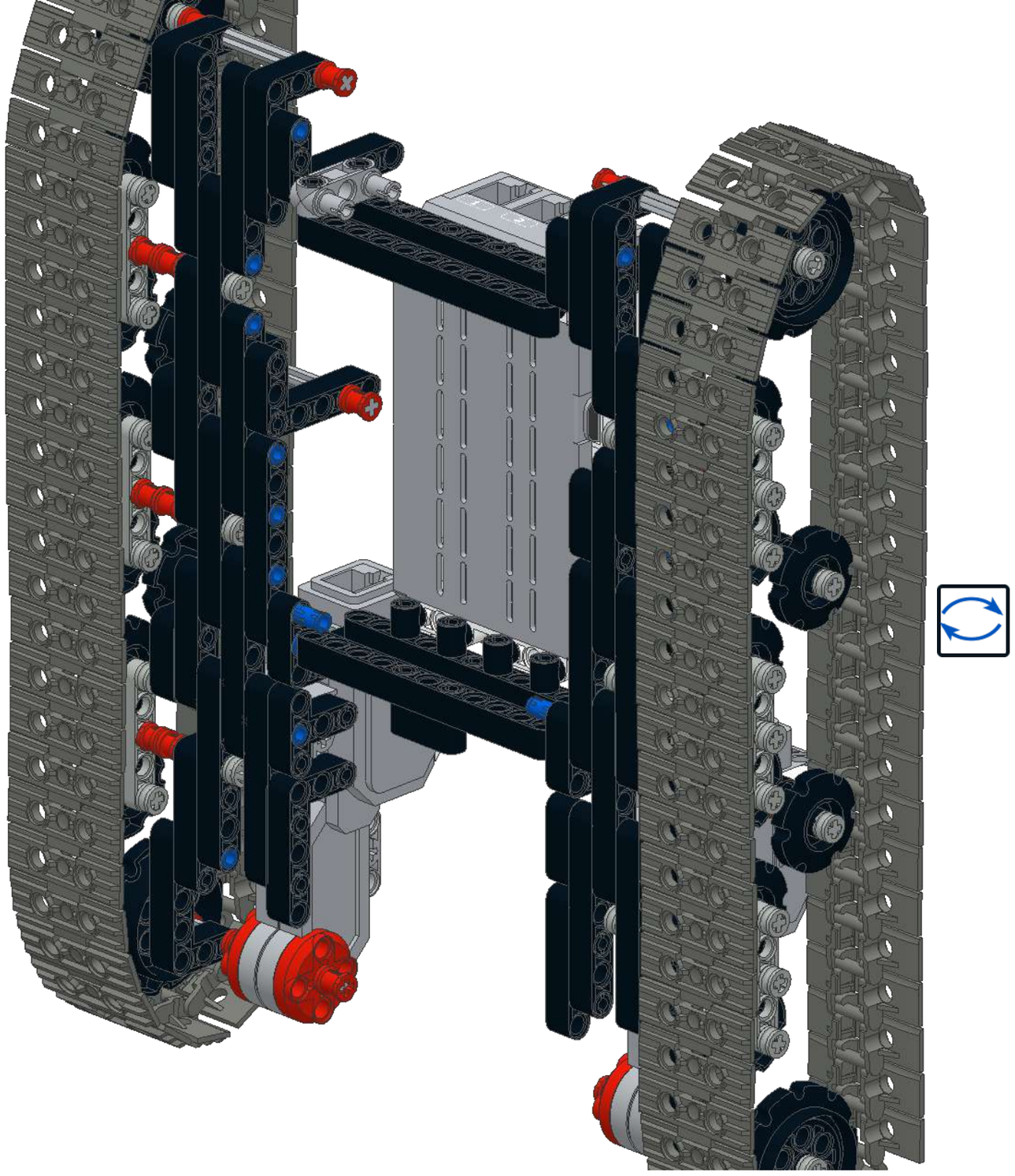

73

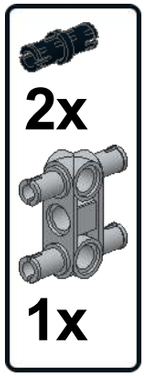

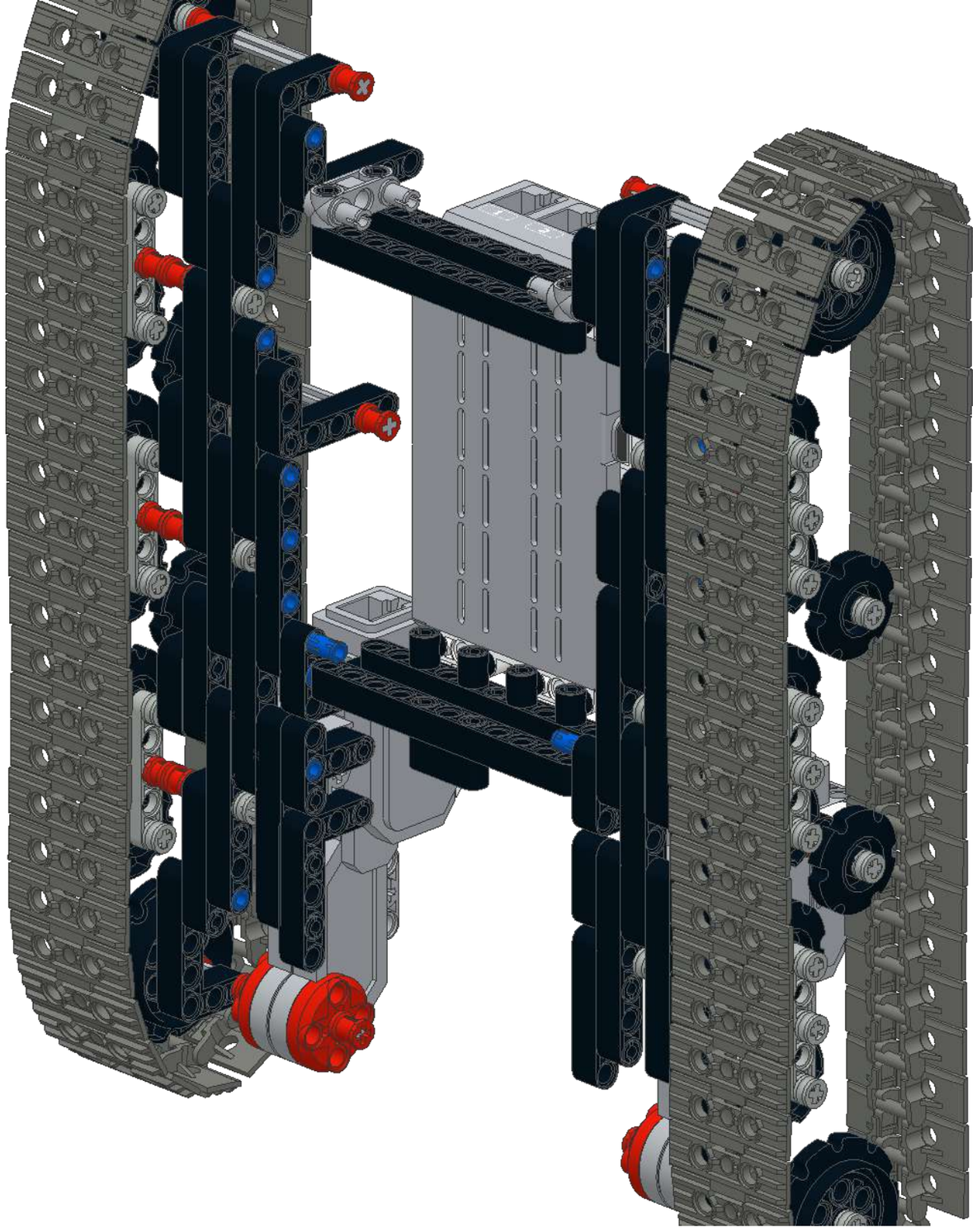

74

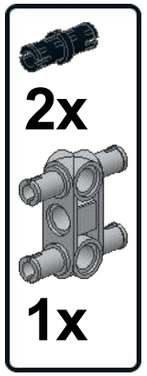

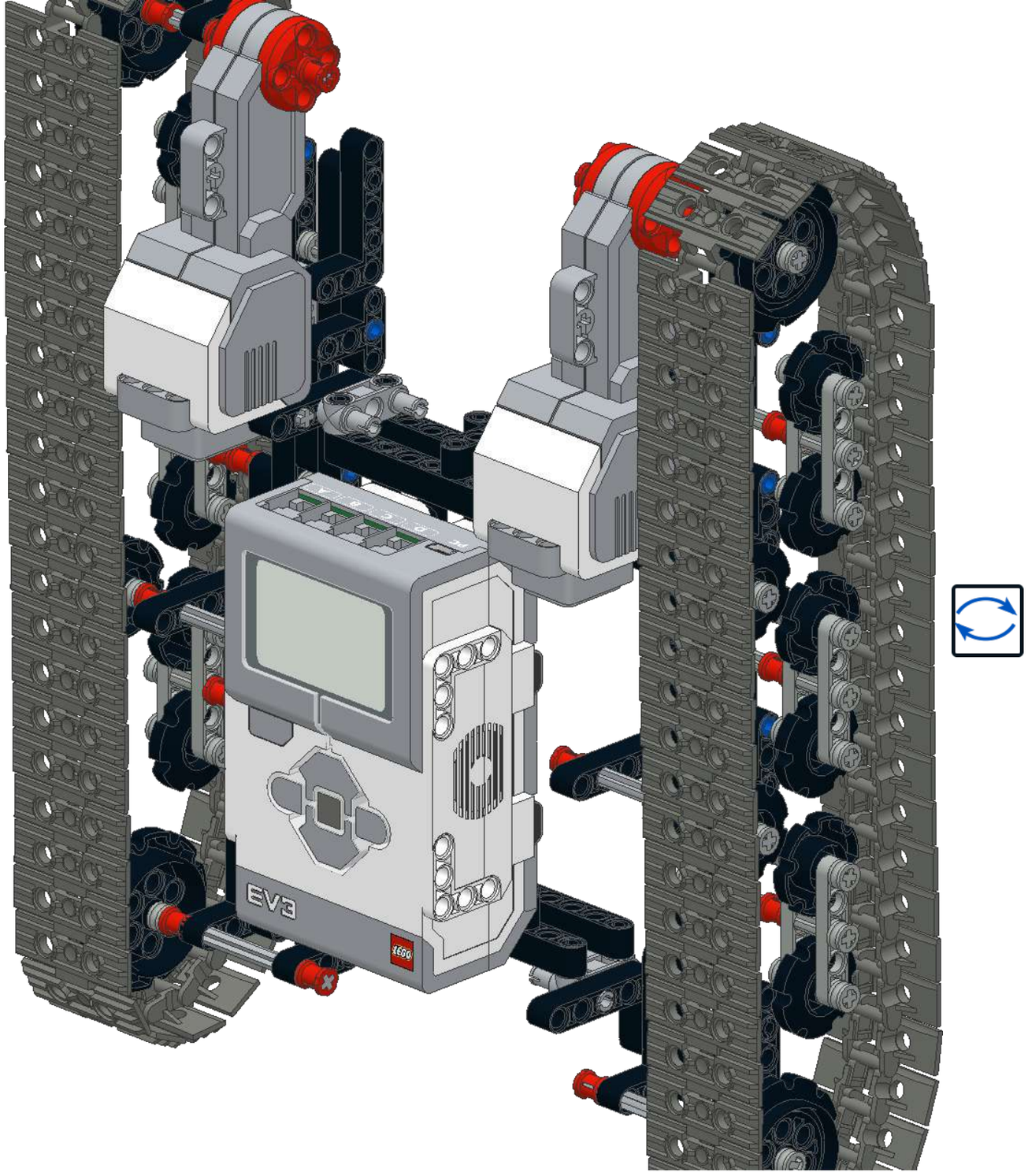

75

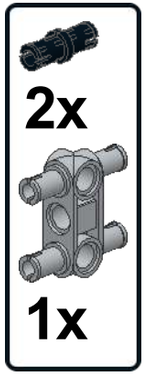

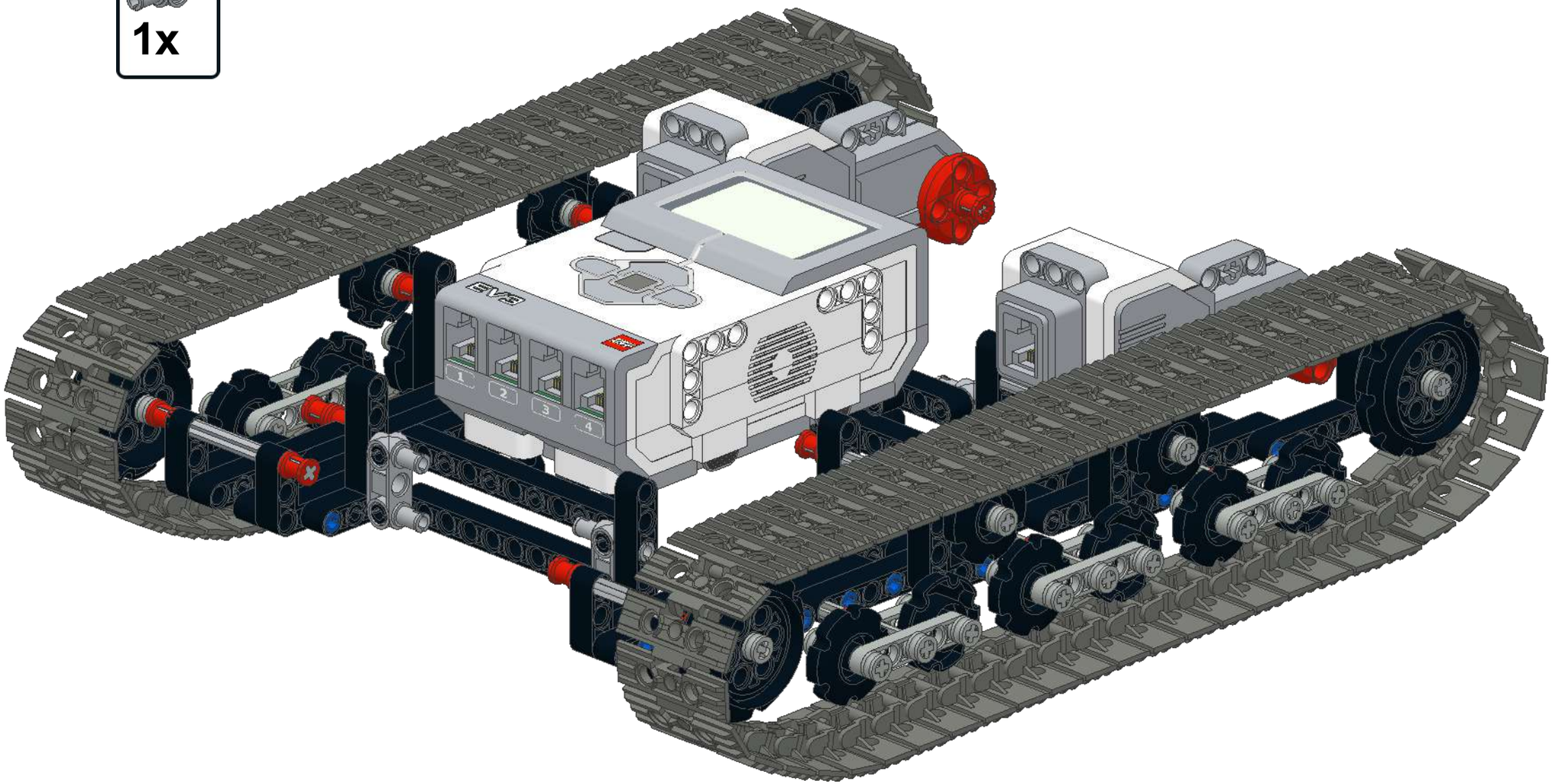

76

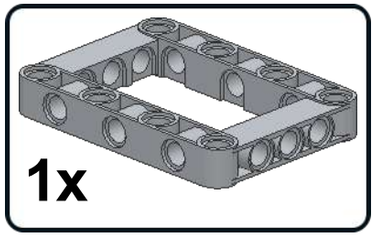

1x

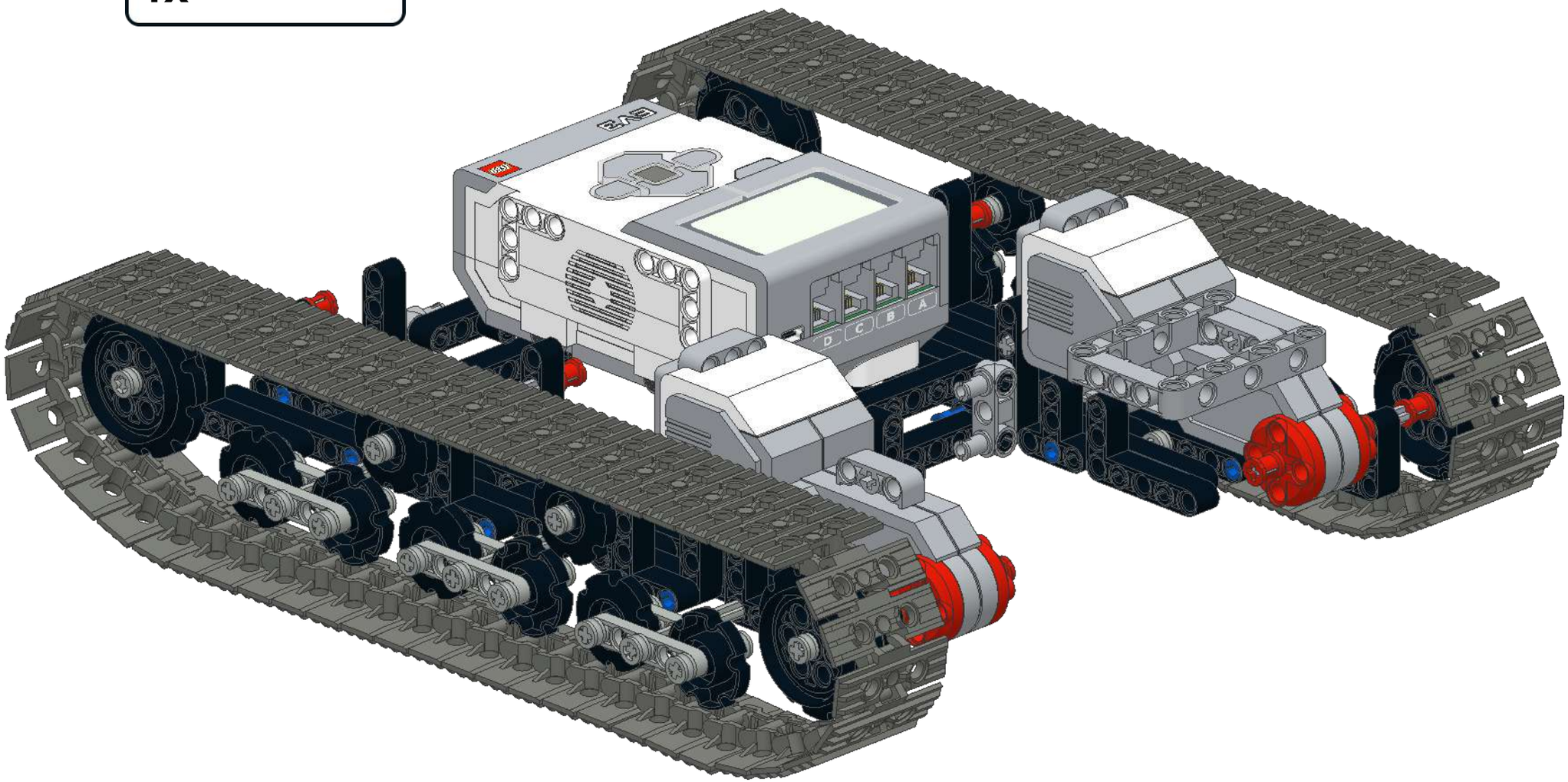

77

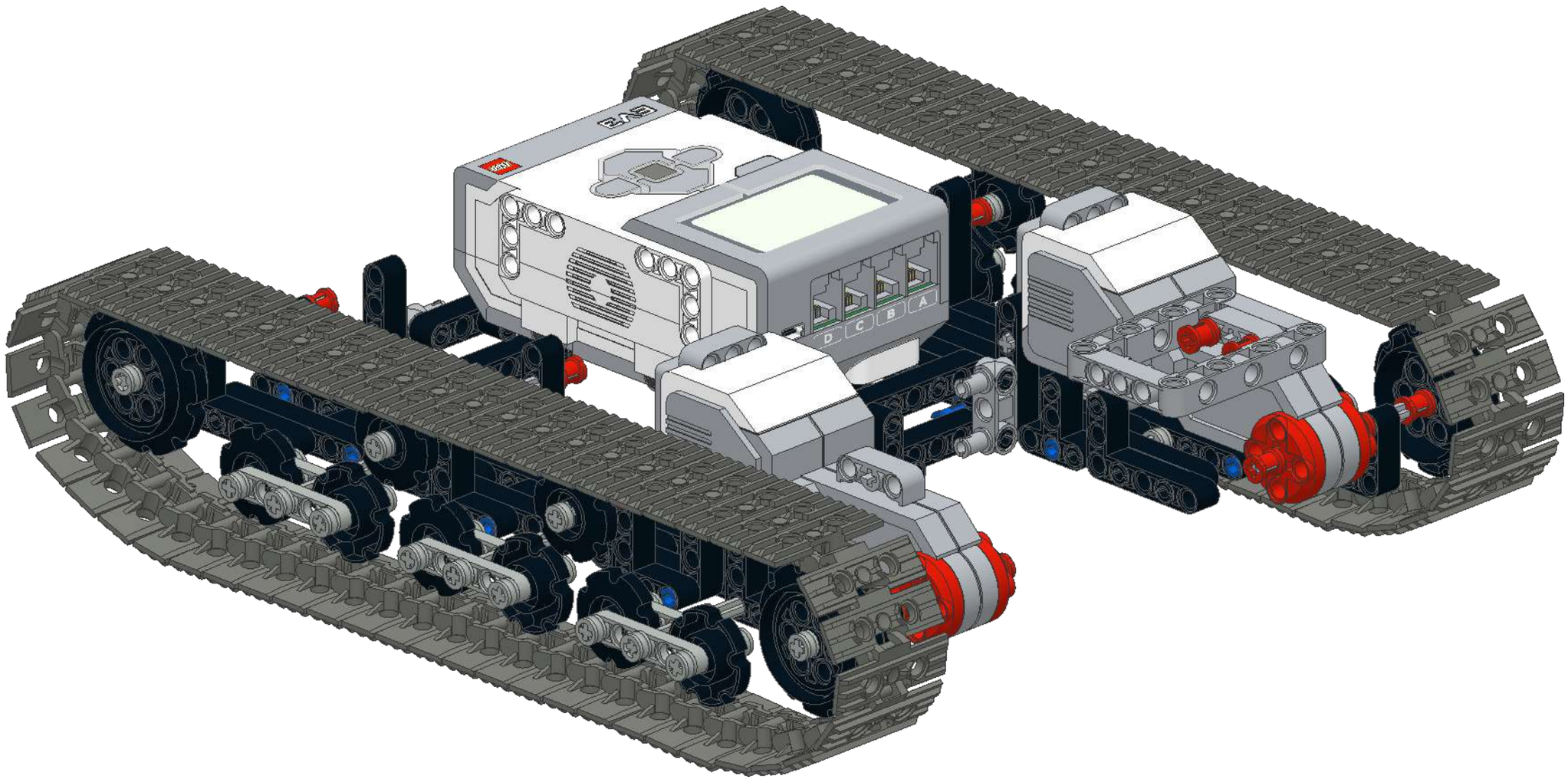

78 2x

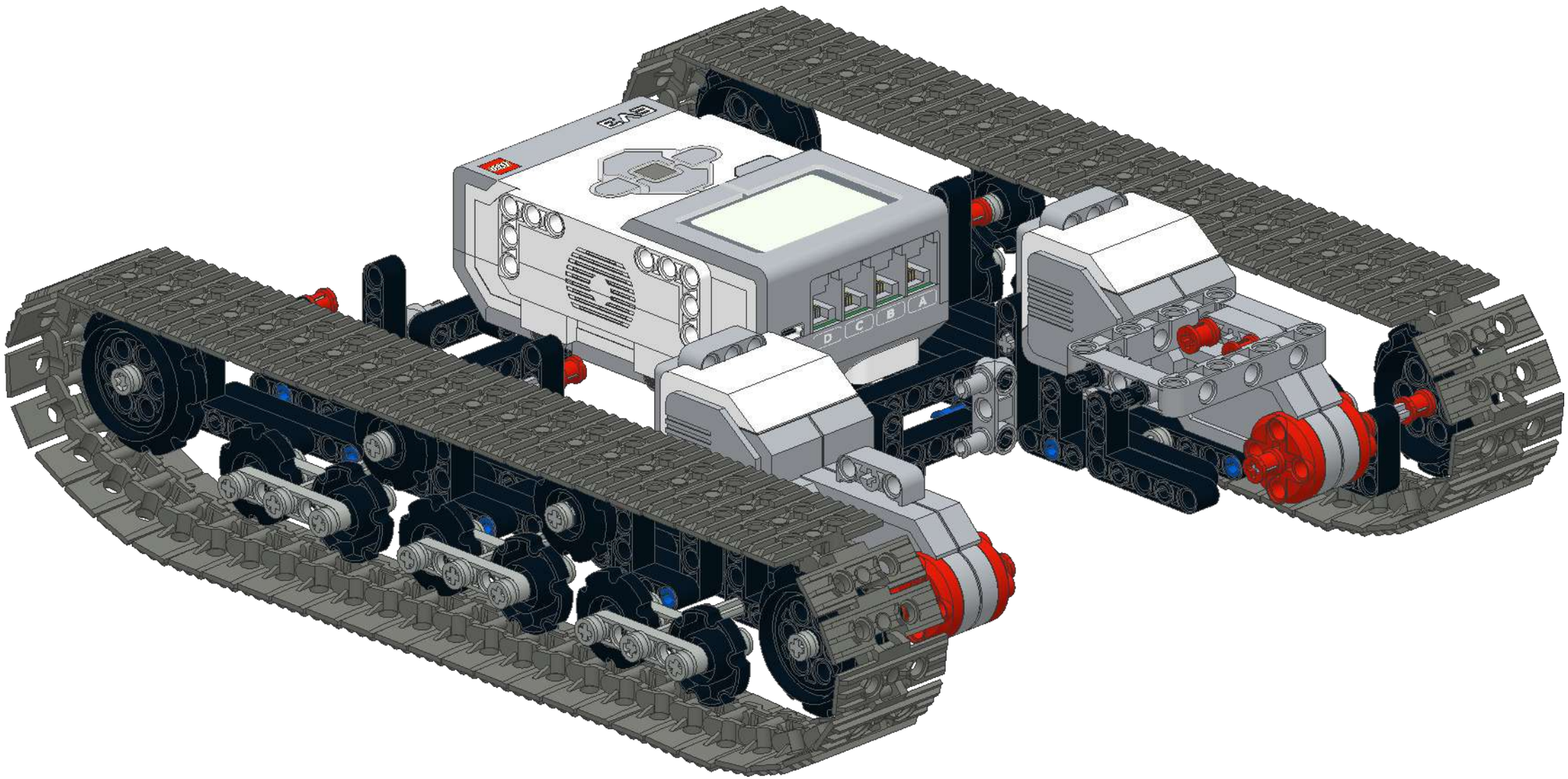

79

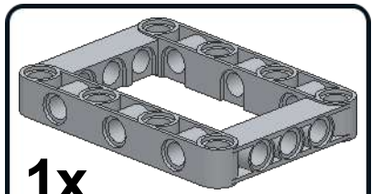

1x

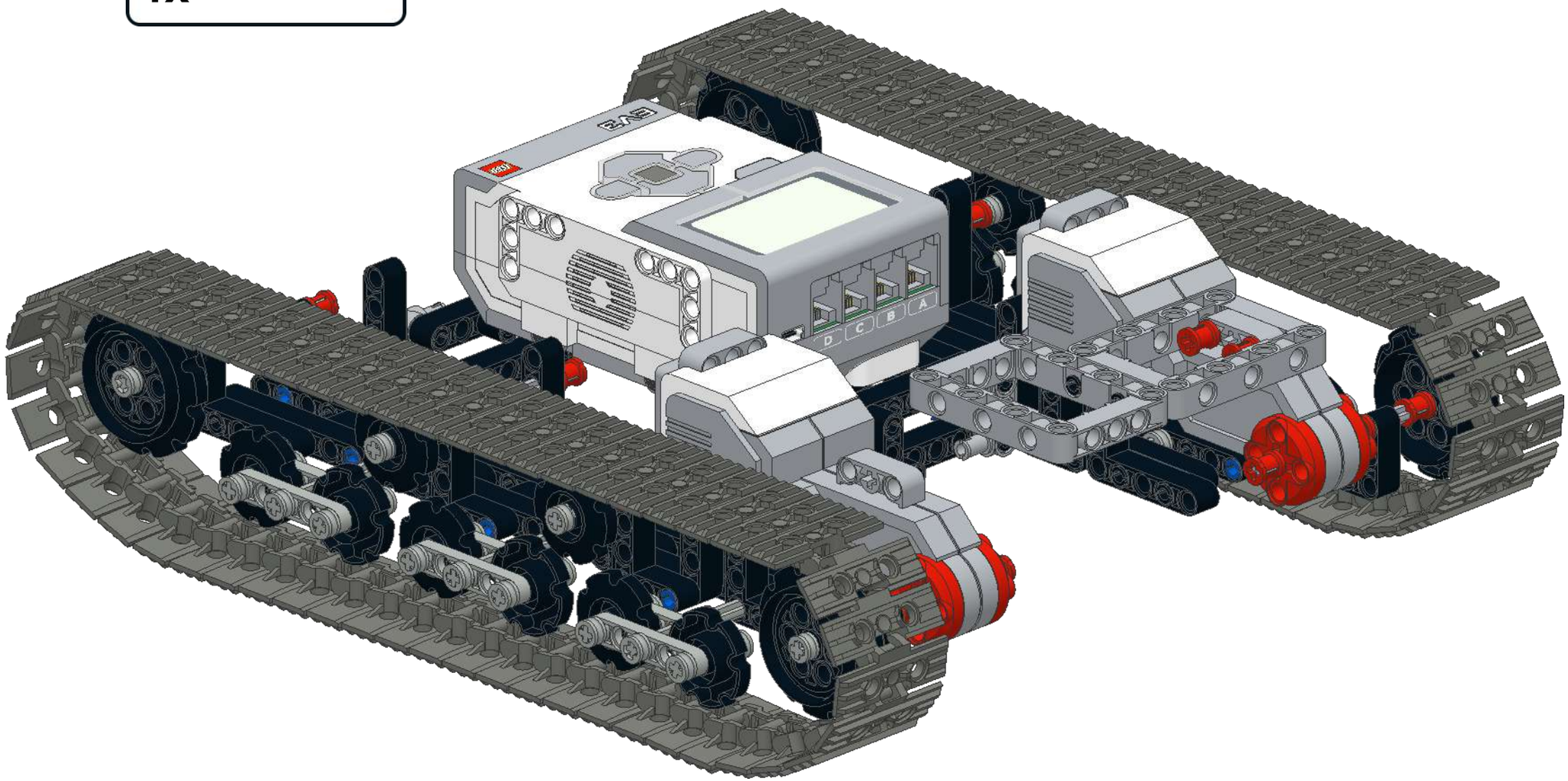

80 2x

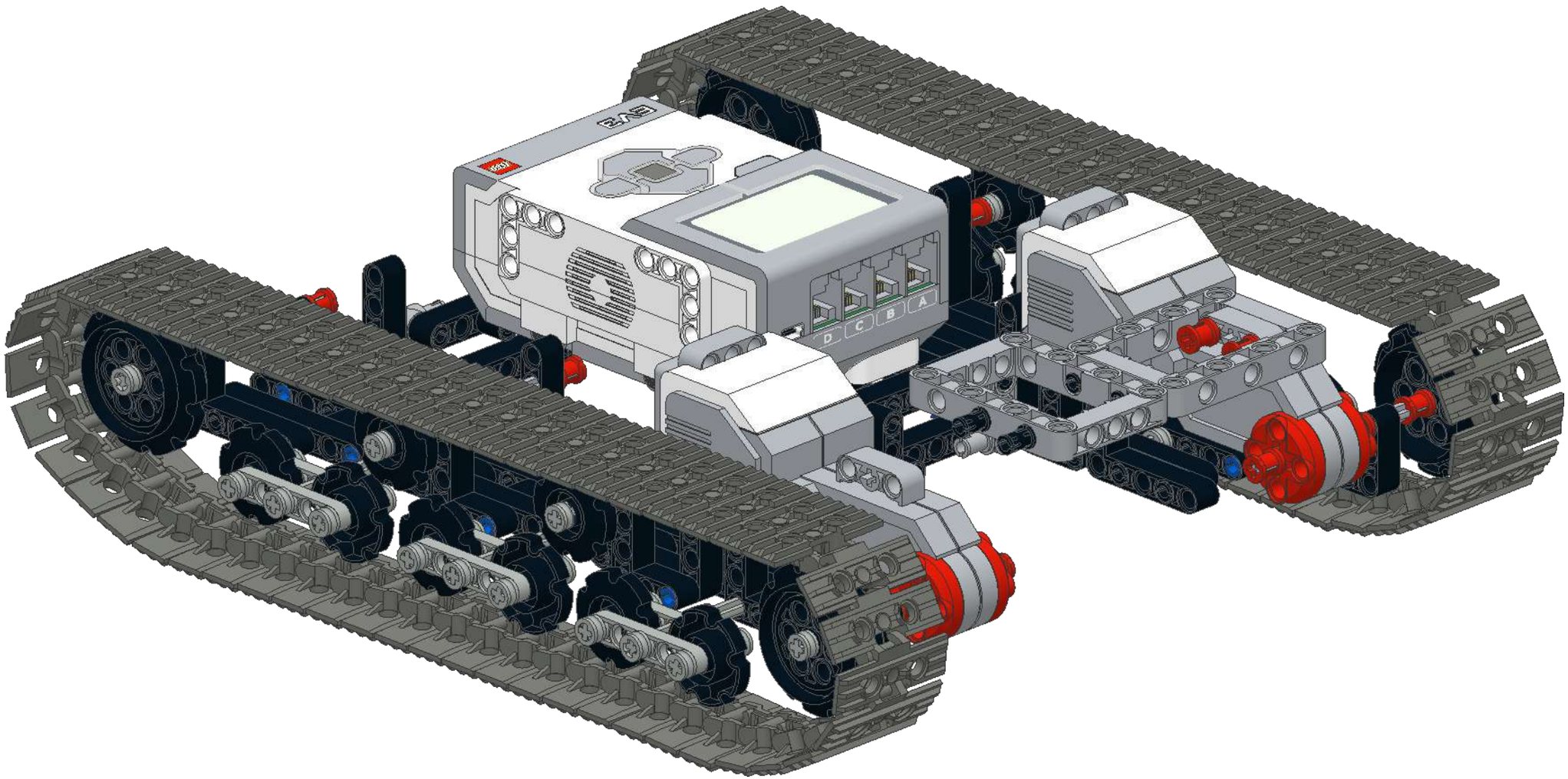

81

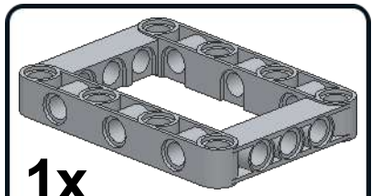

1x

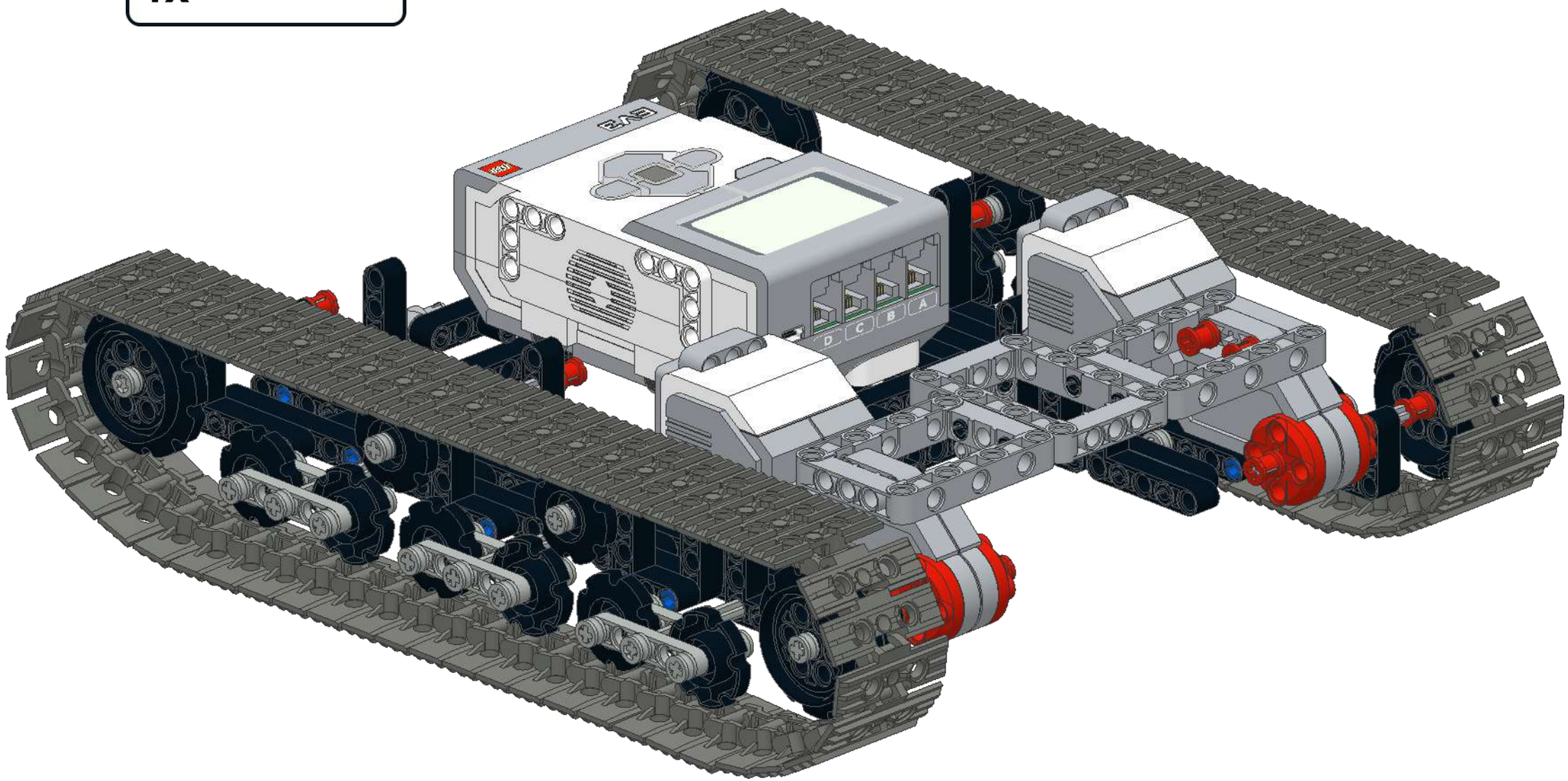

82

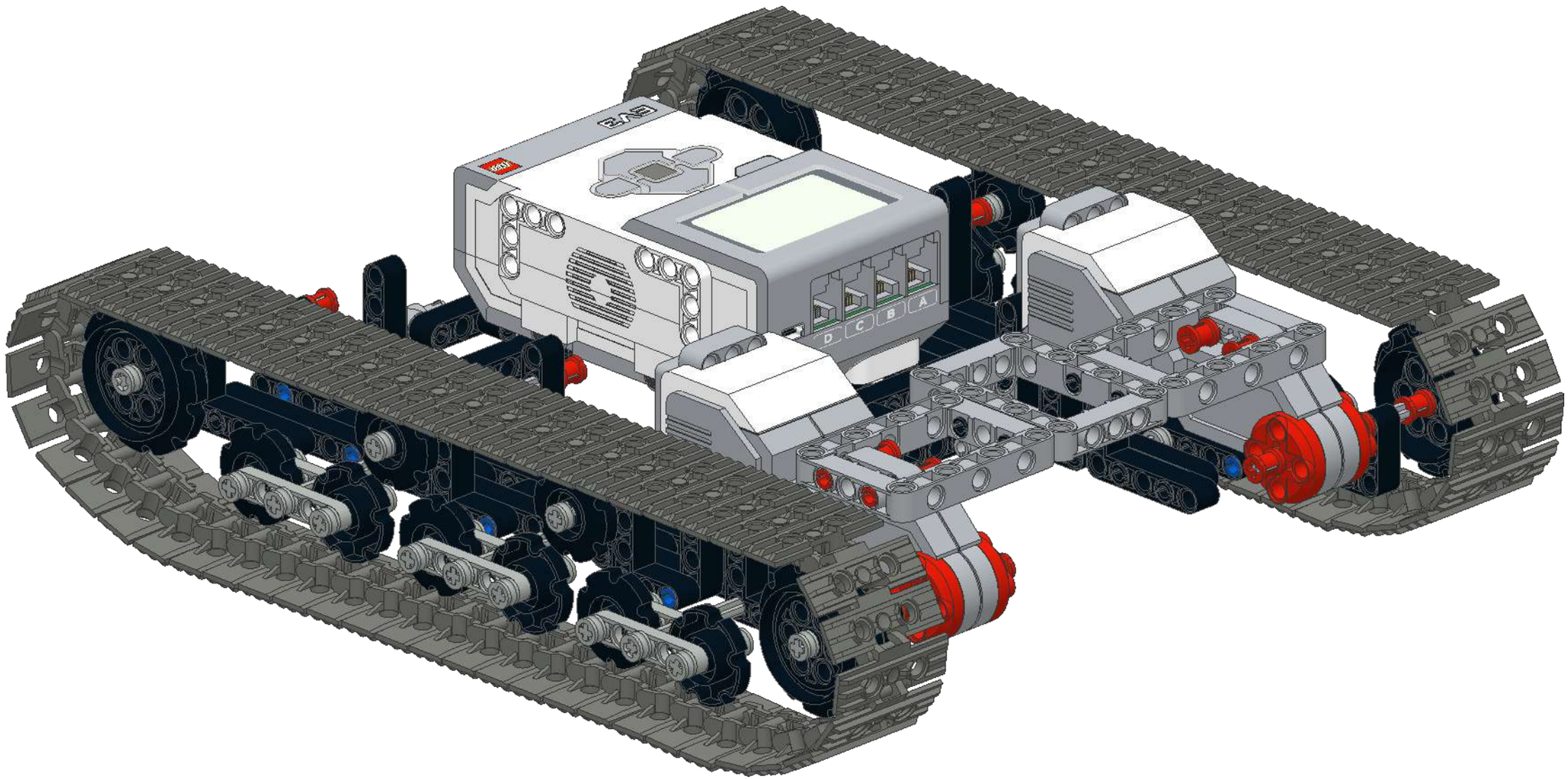

83

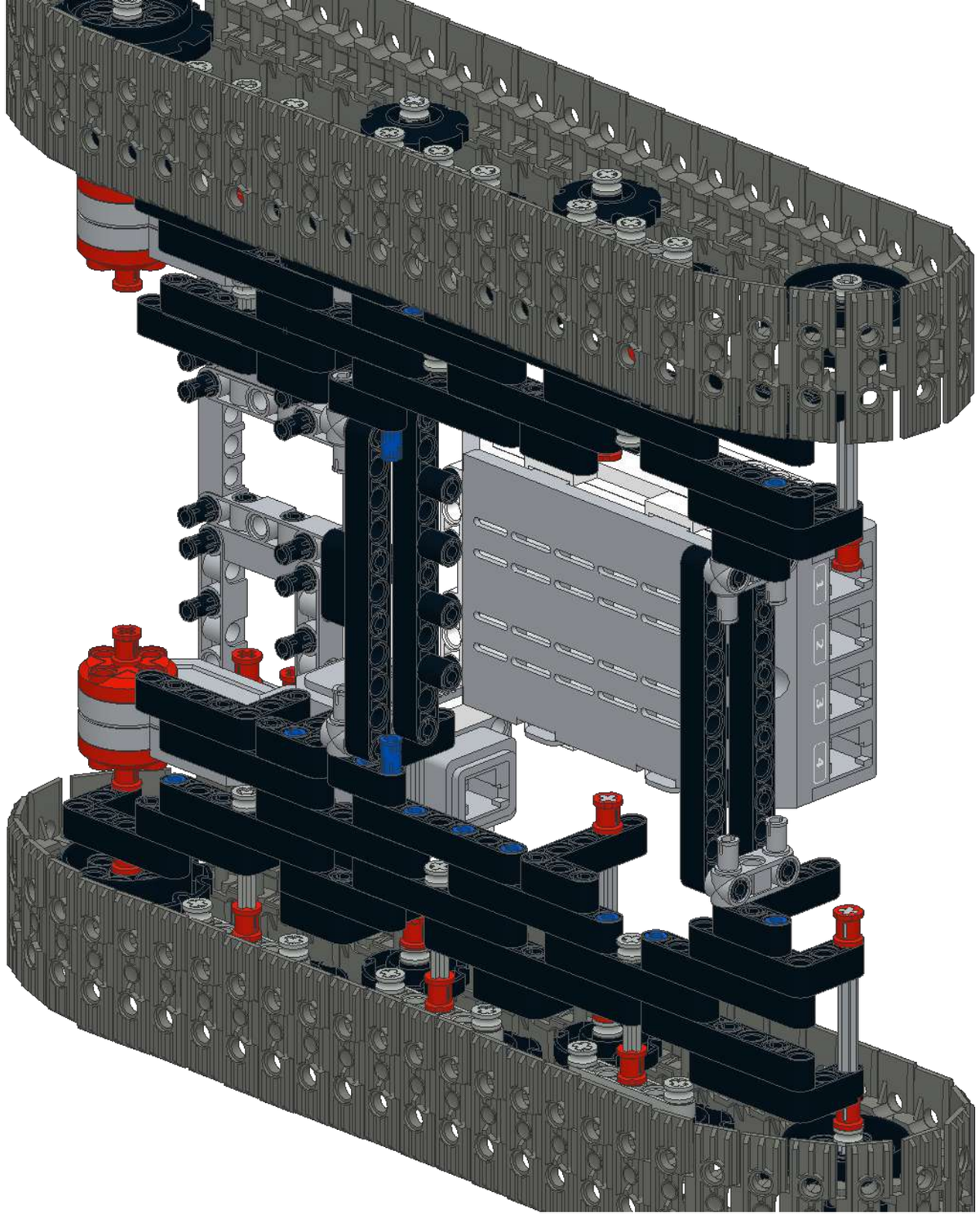

84

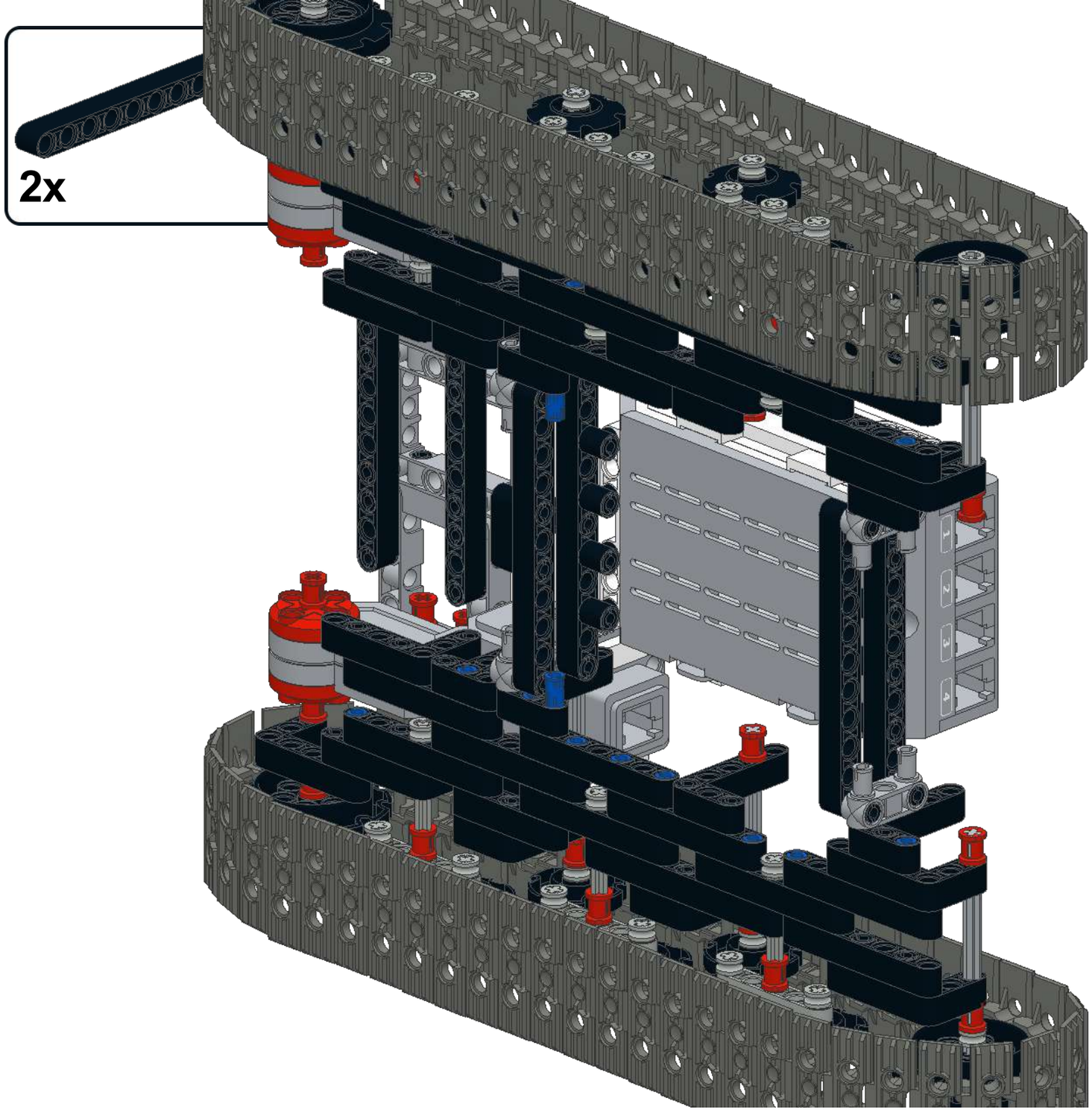

85

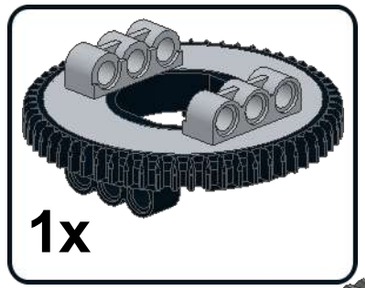

1x

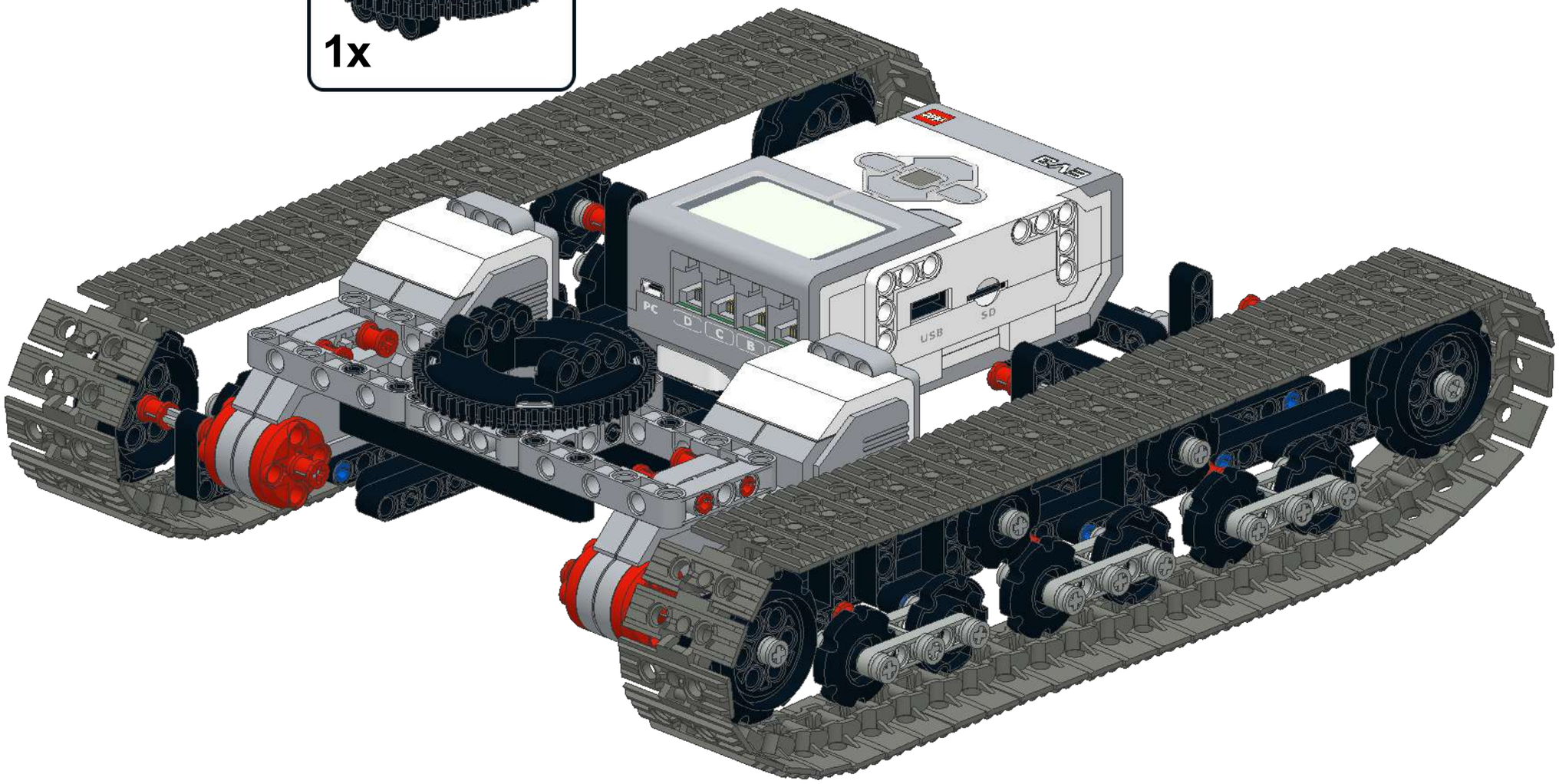

86

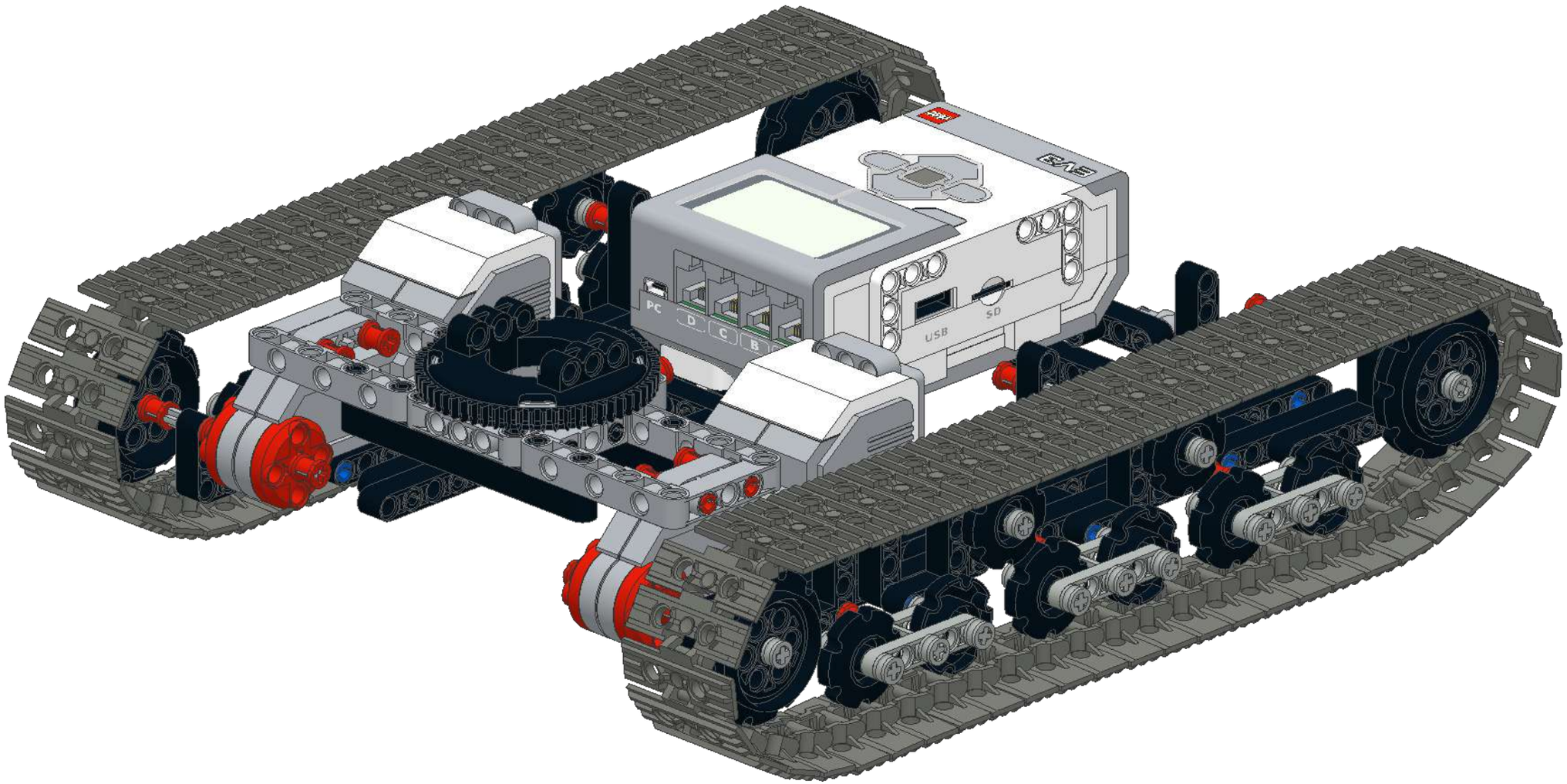

87

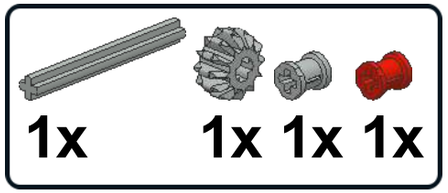

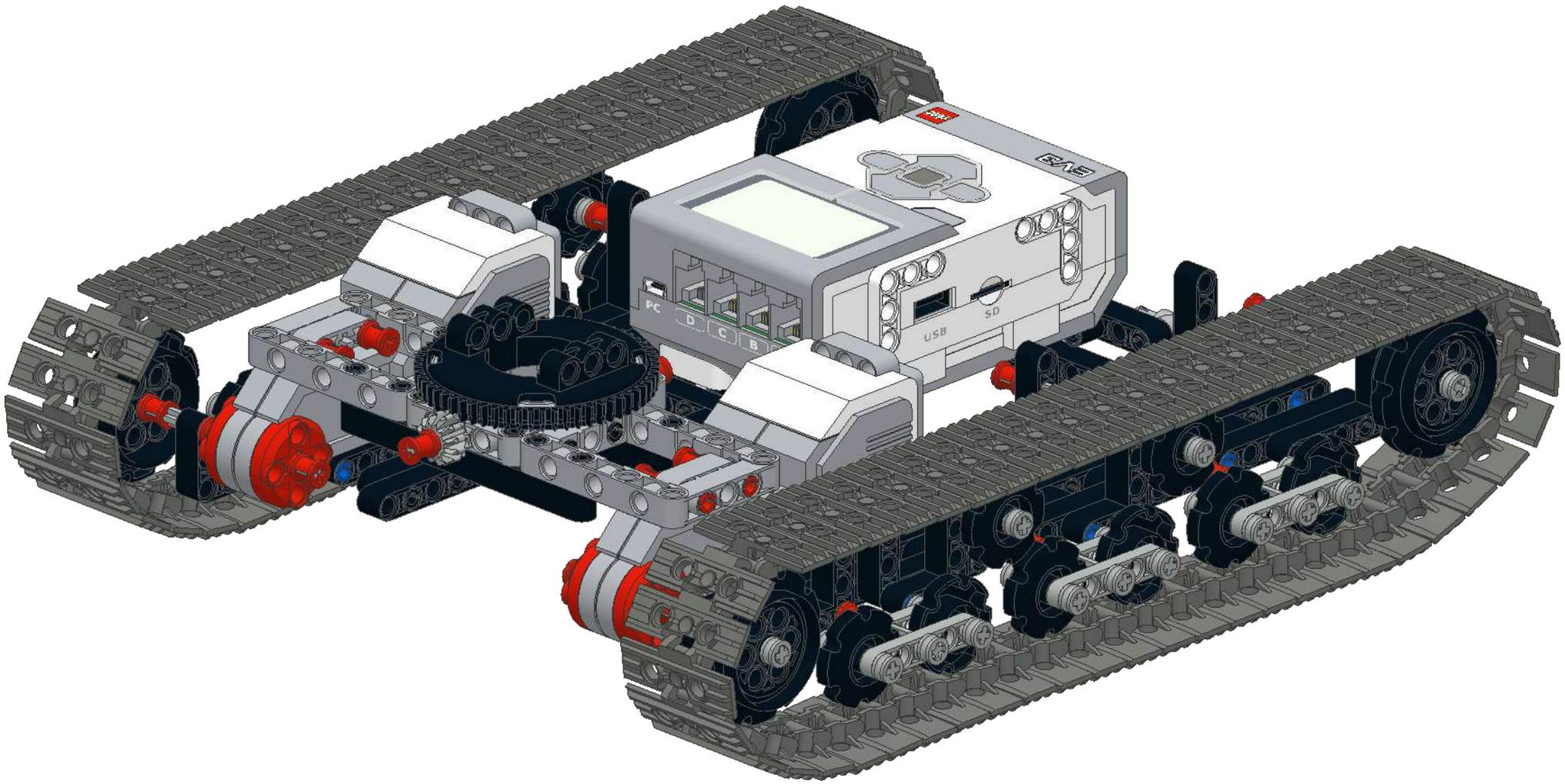

88

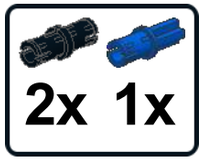

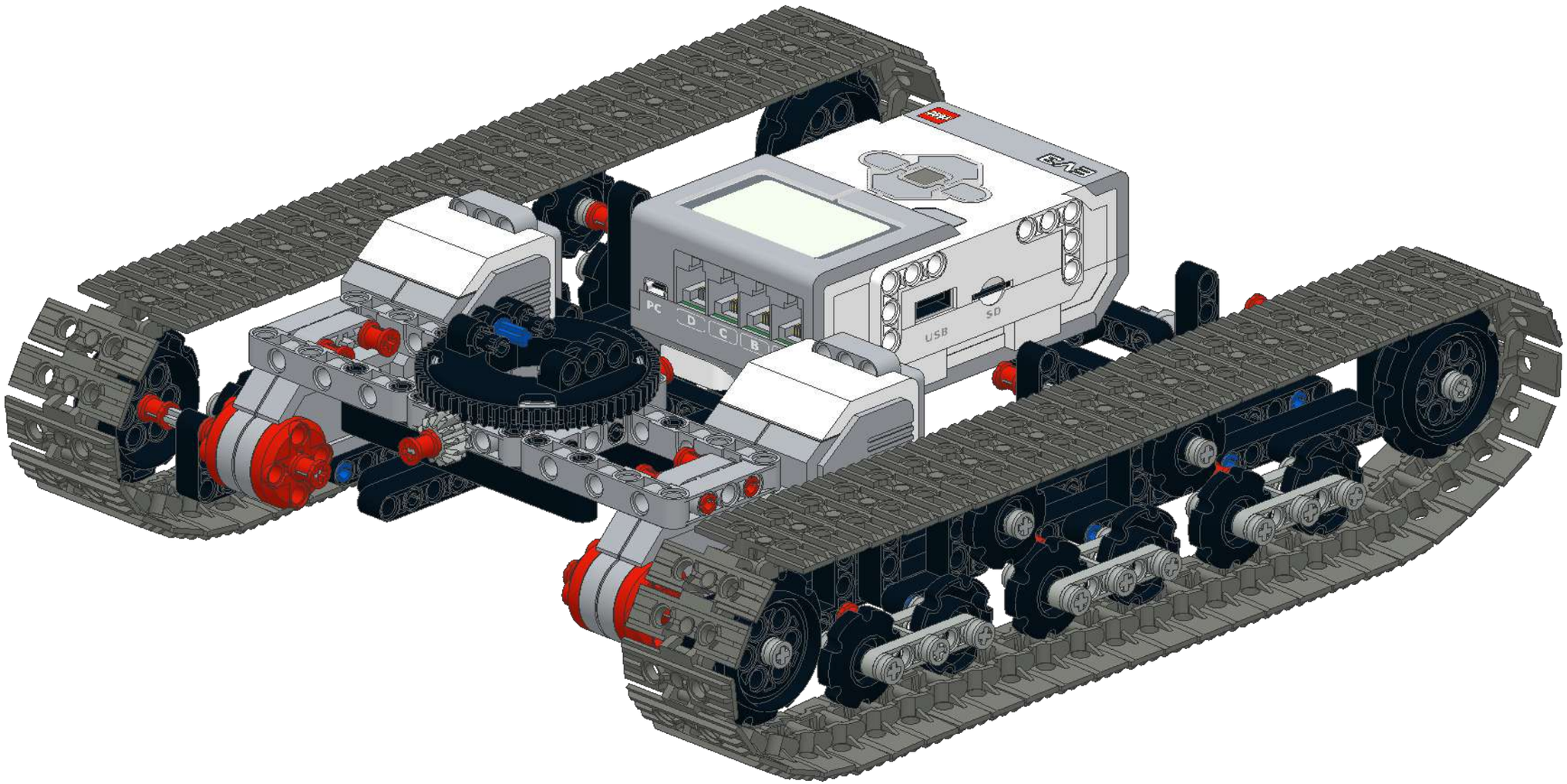

89

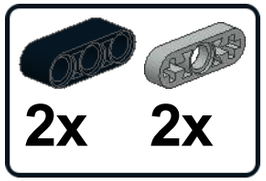

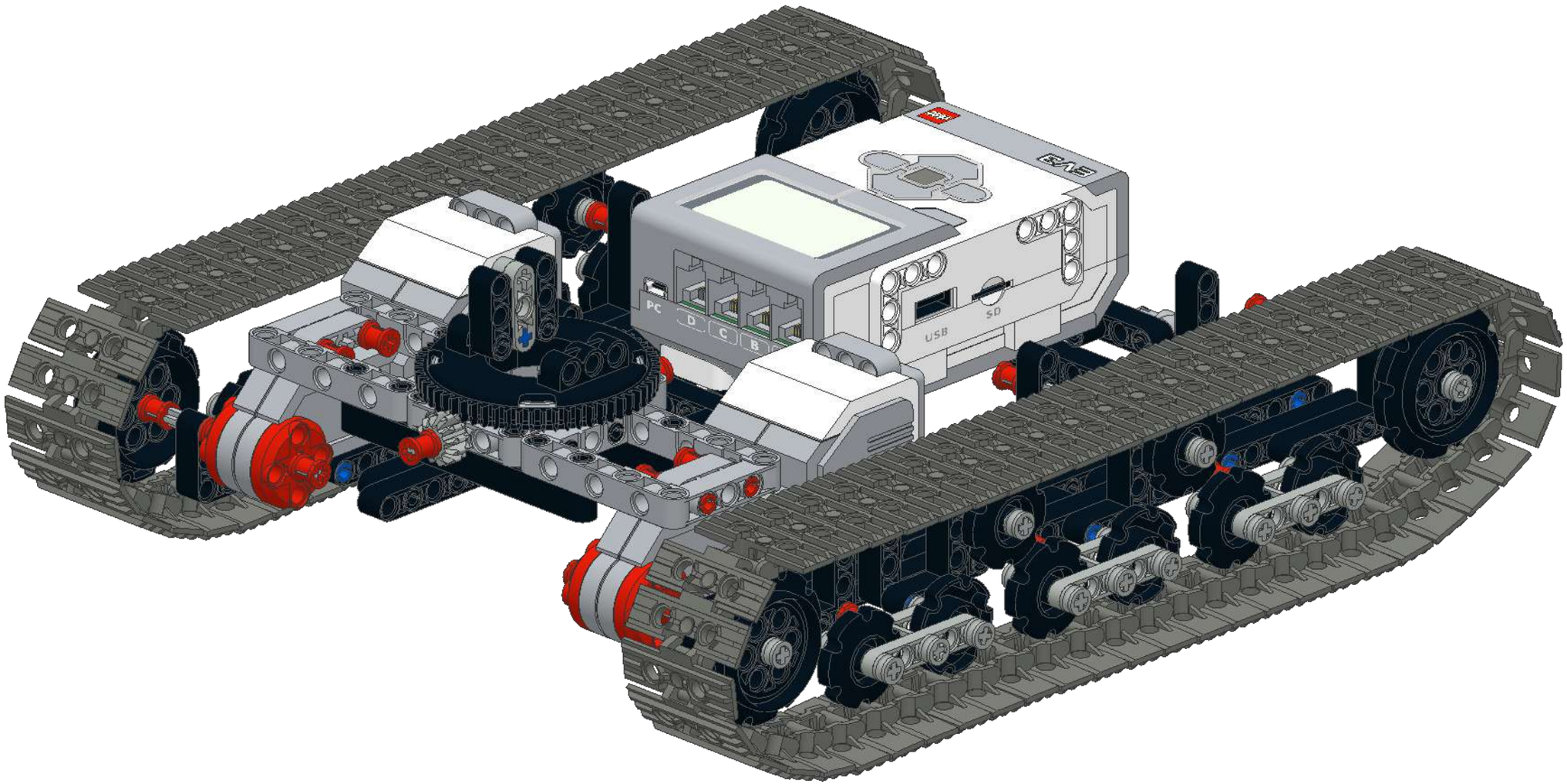

90 2x 1x

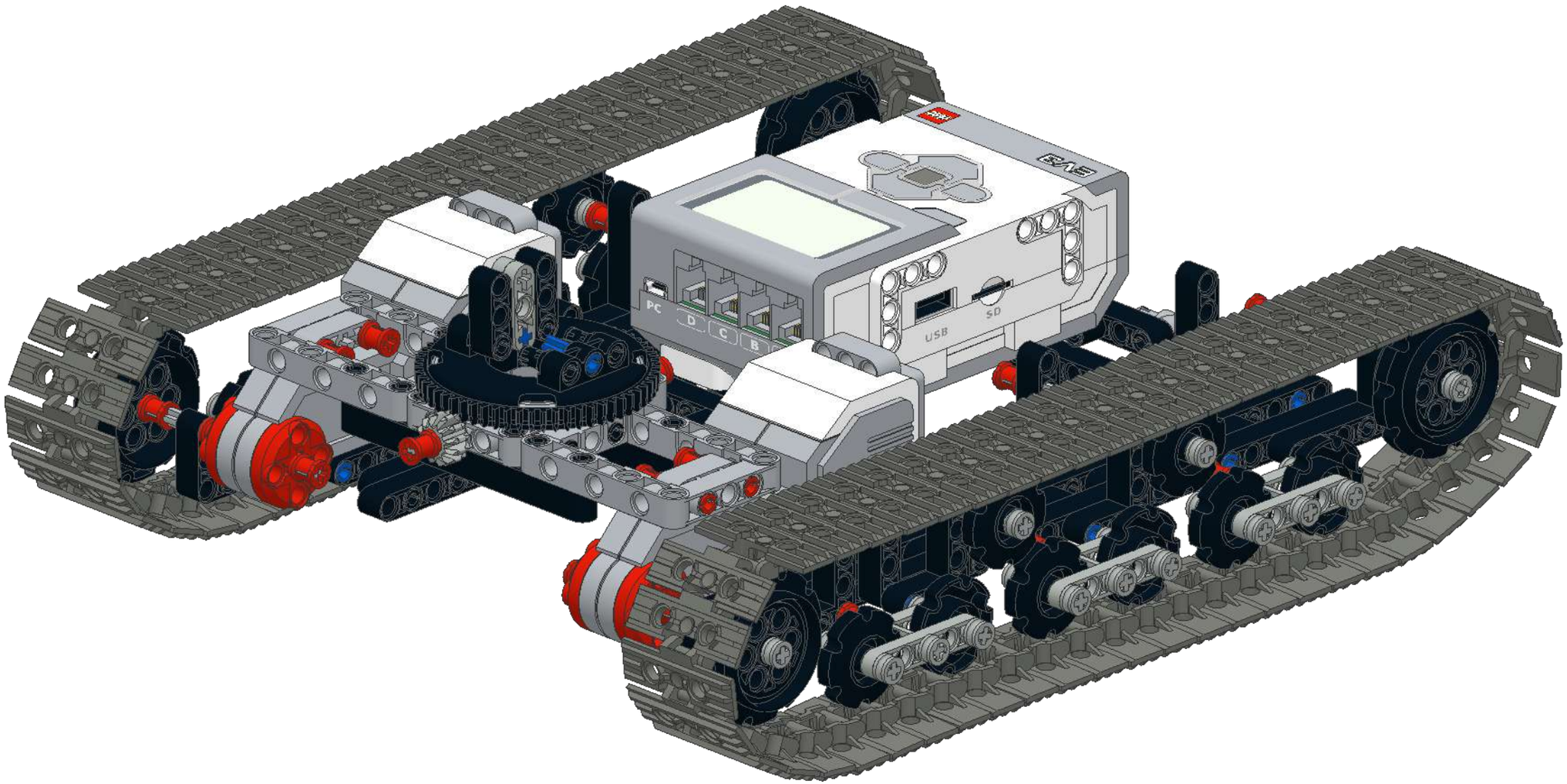

91

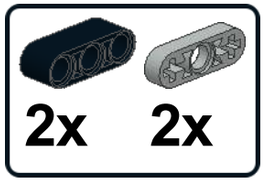

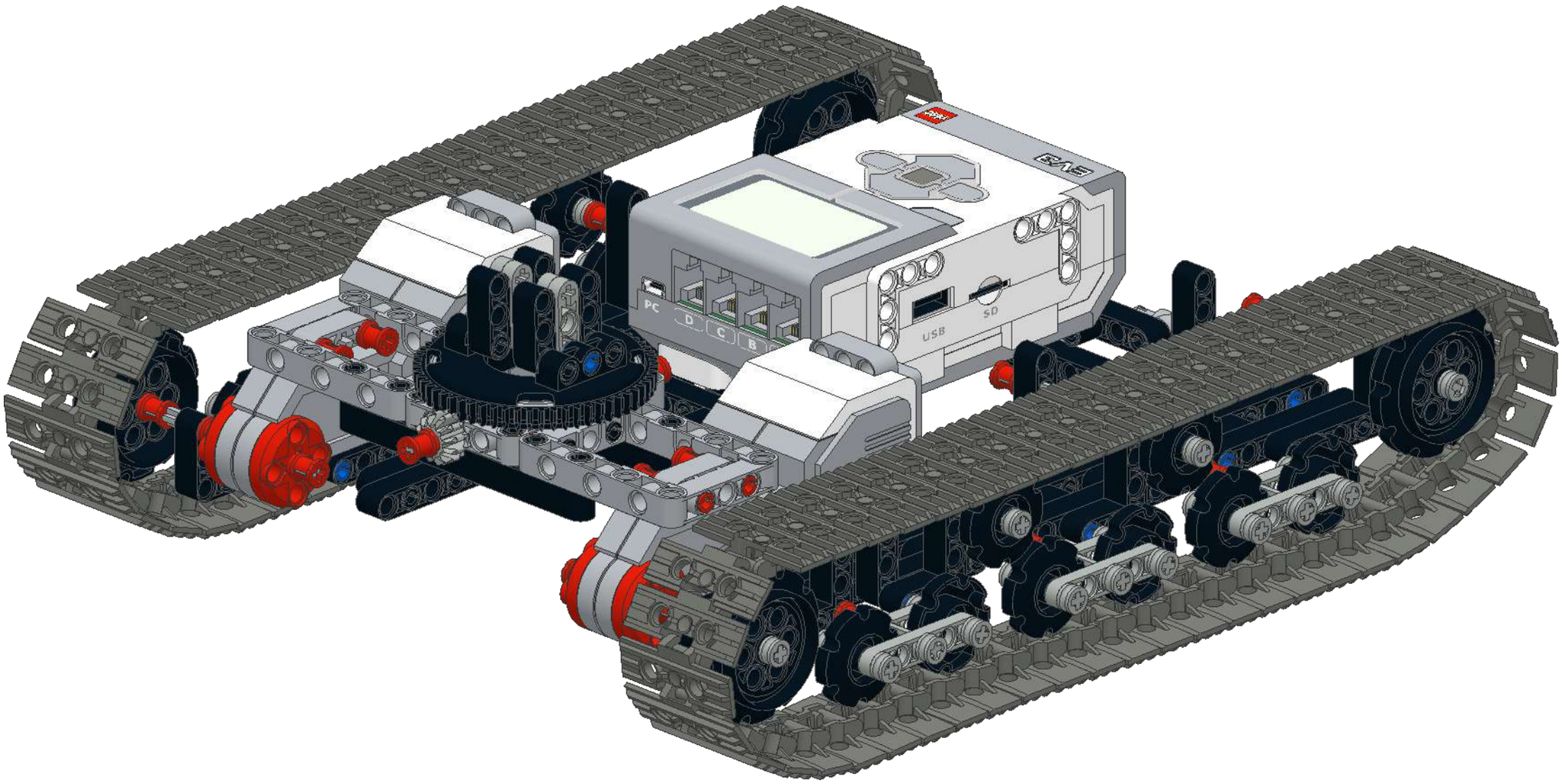

92

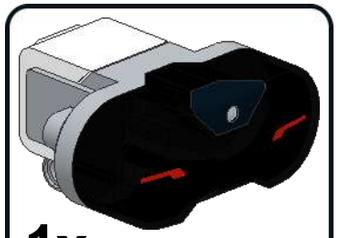

1x

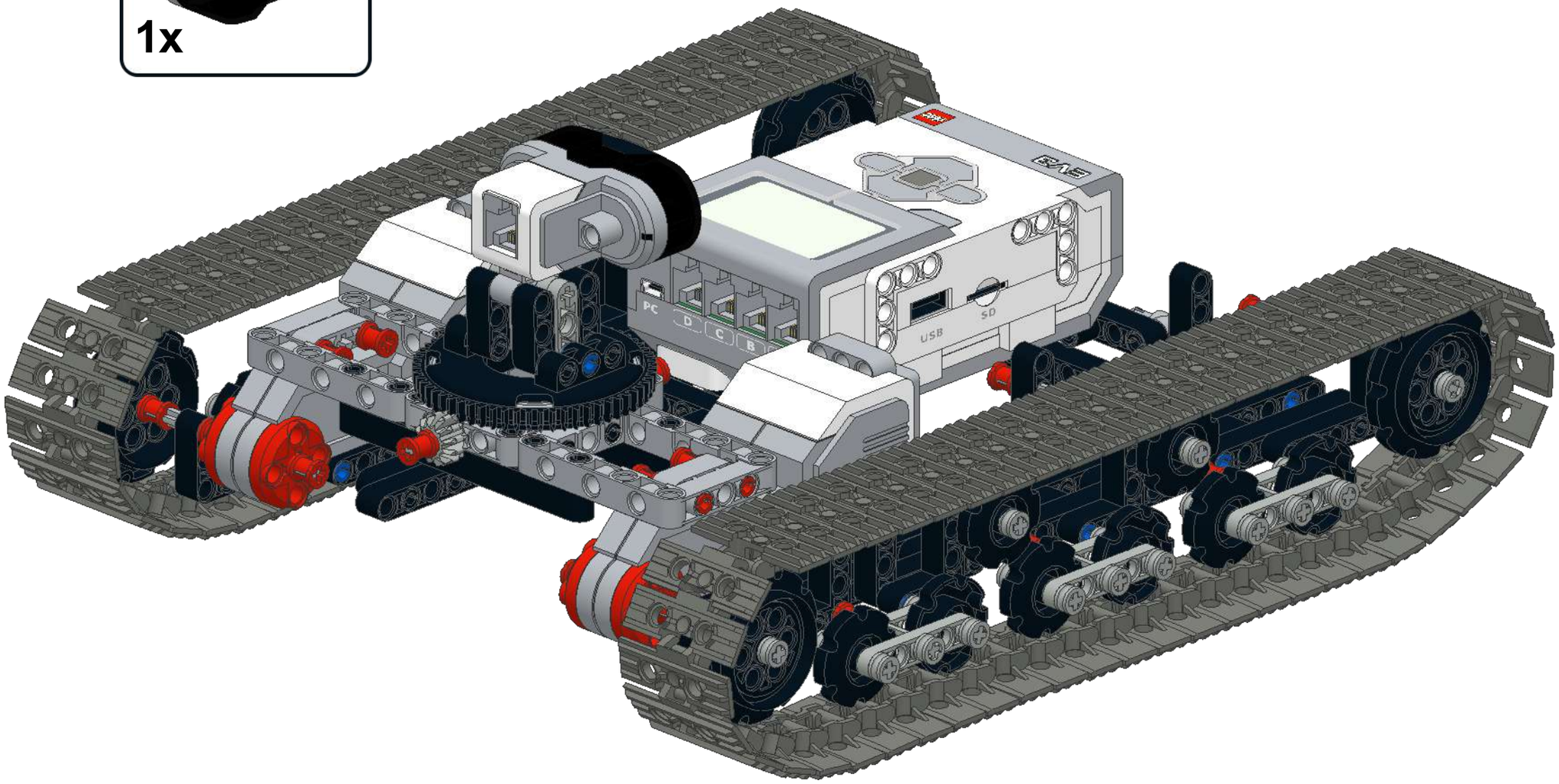

93

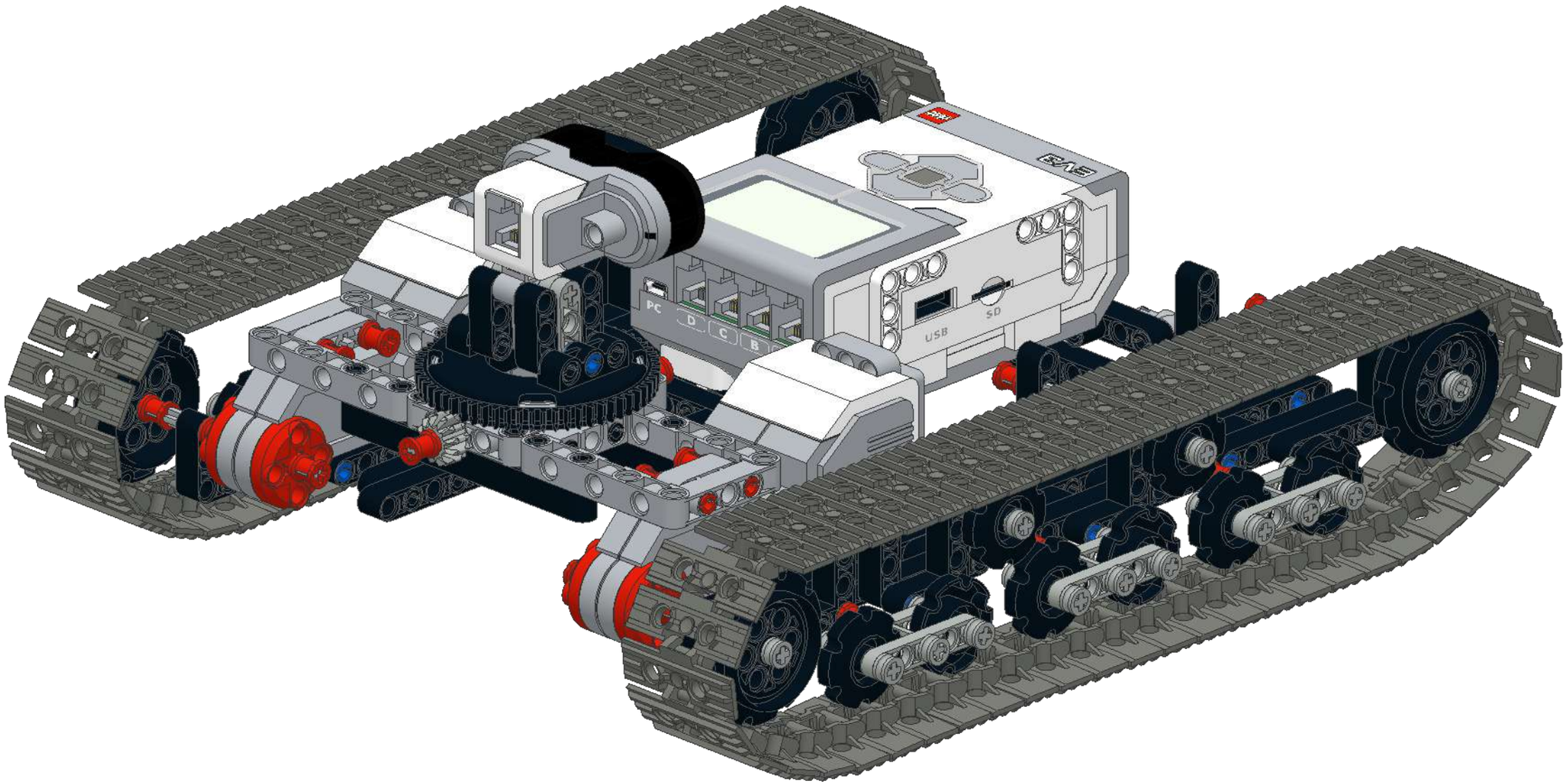

94

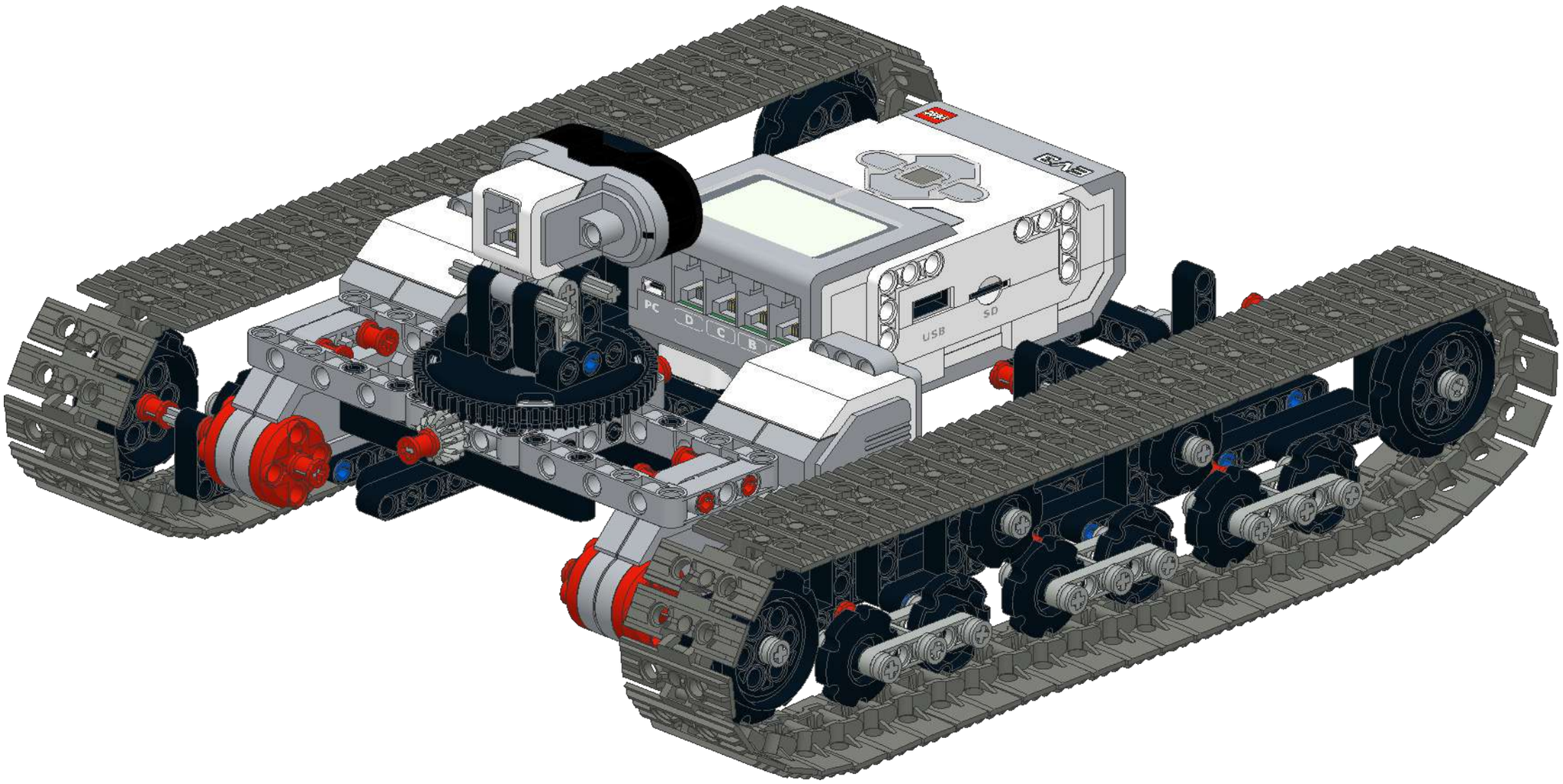

95 4x

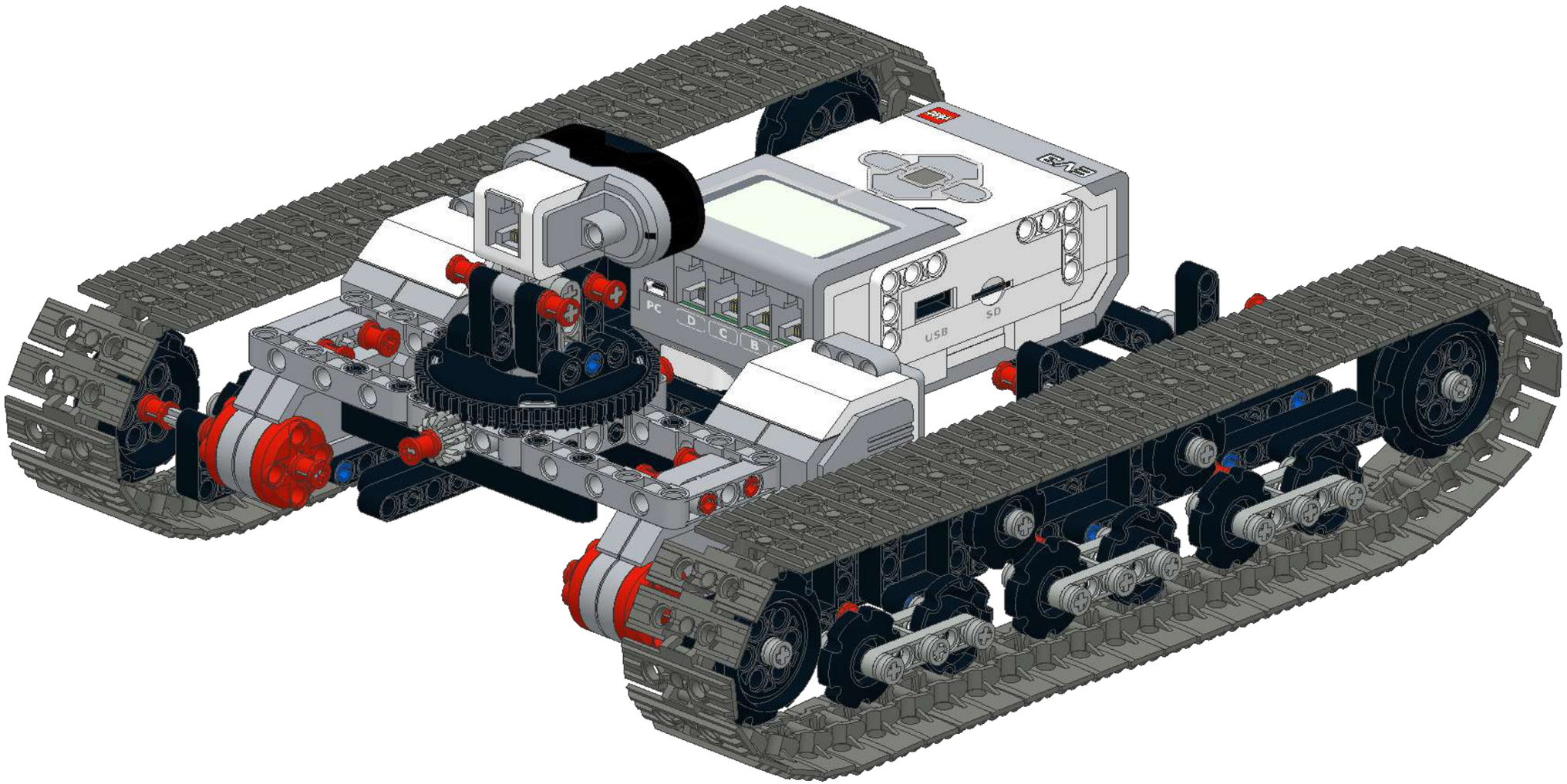

96

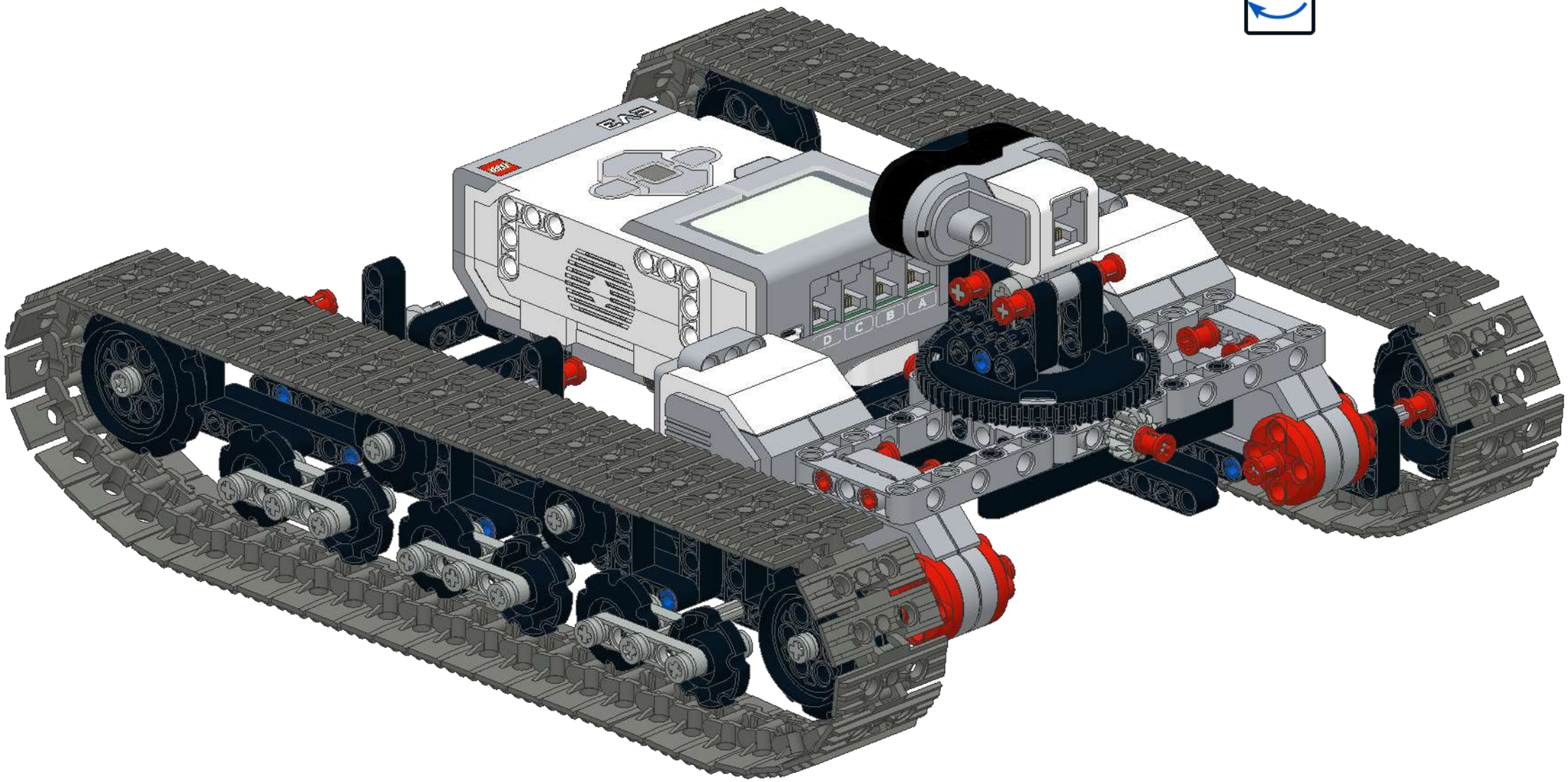

97

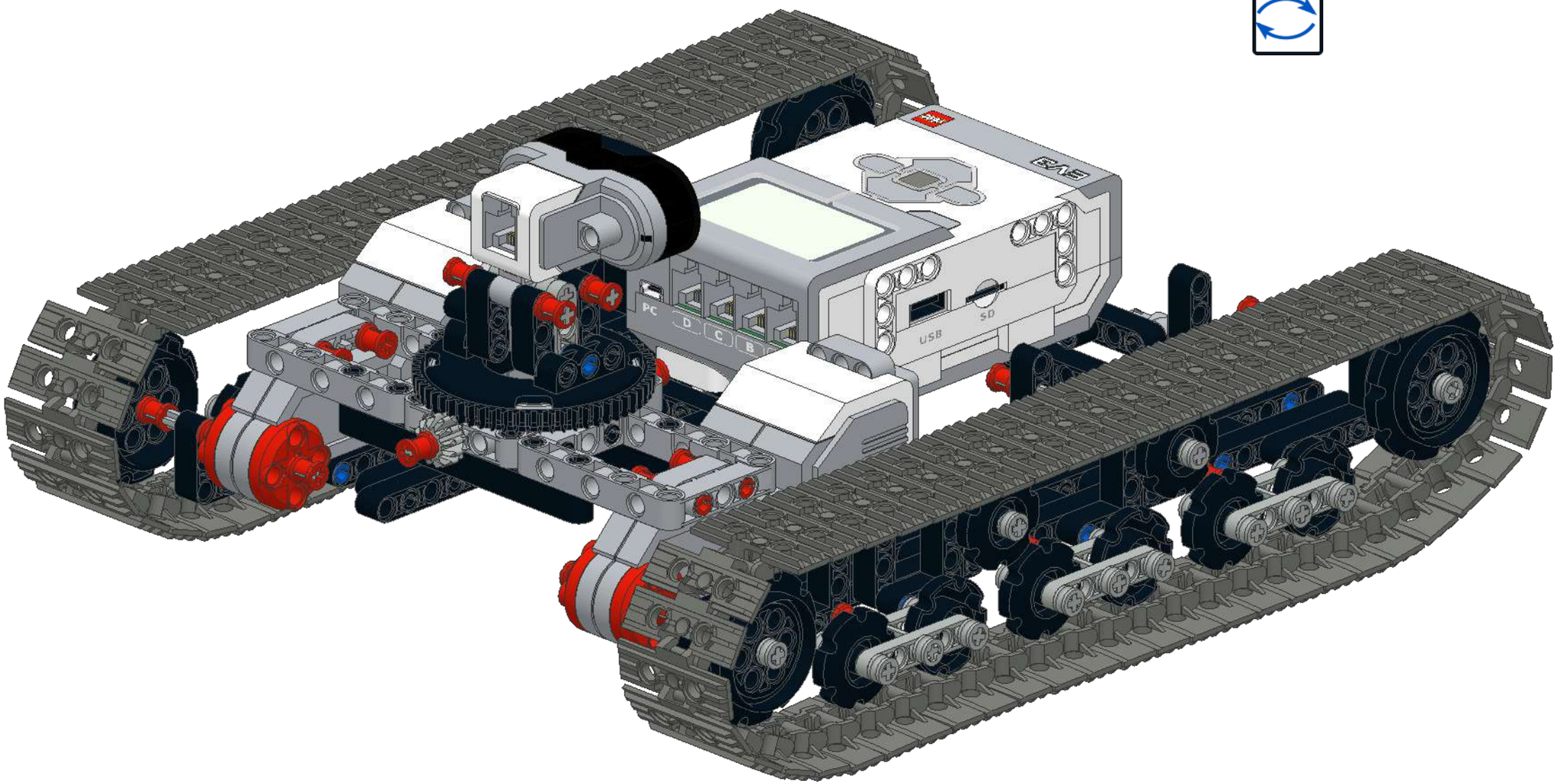

98 3x

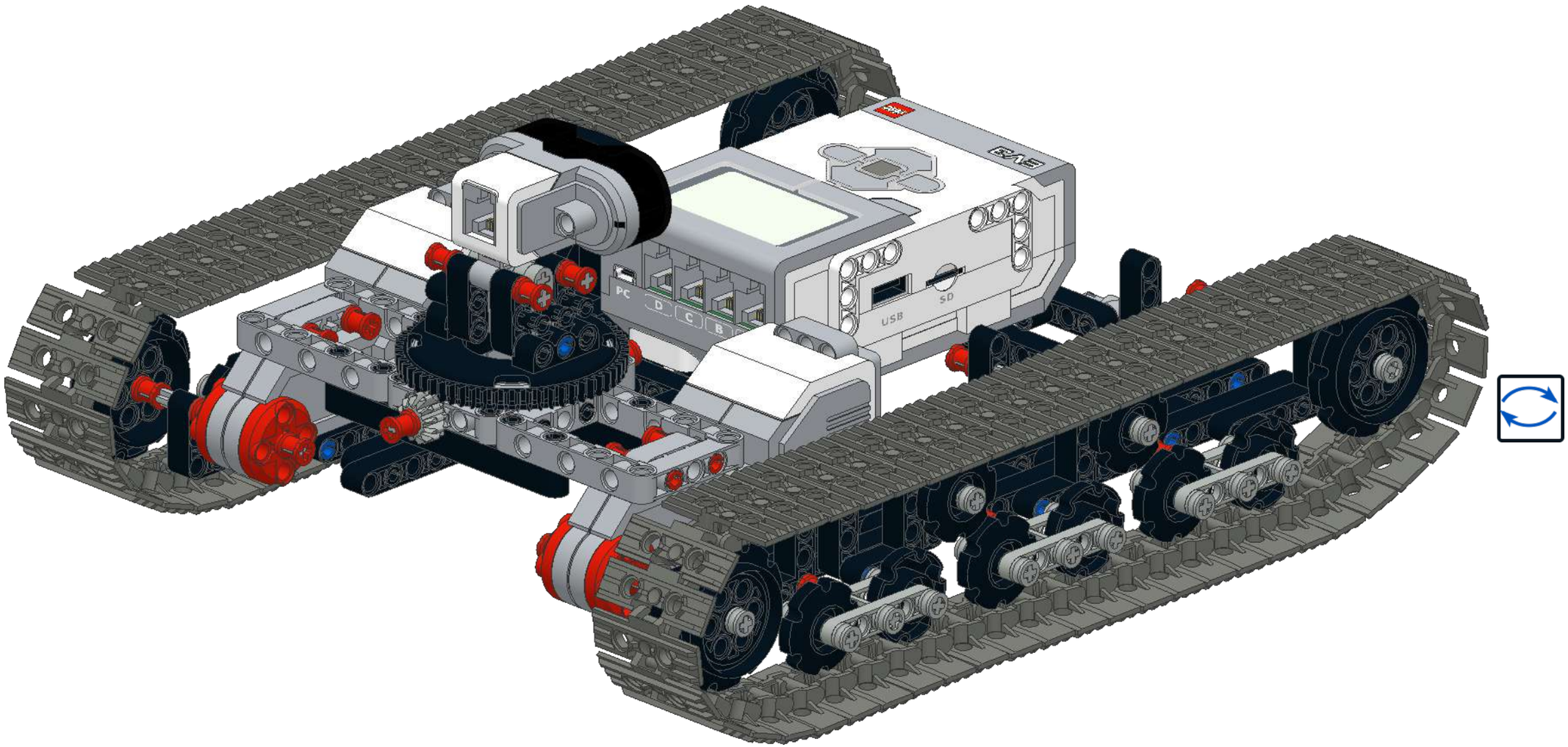

99

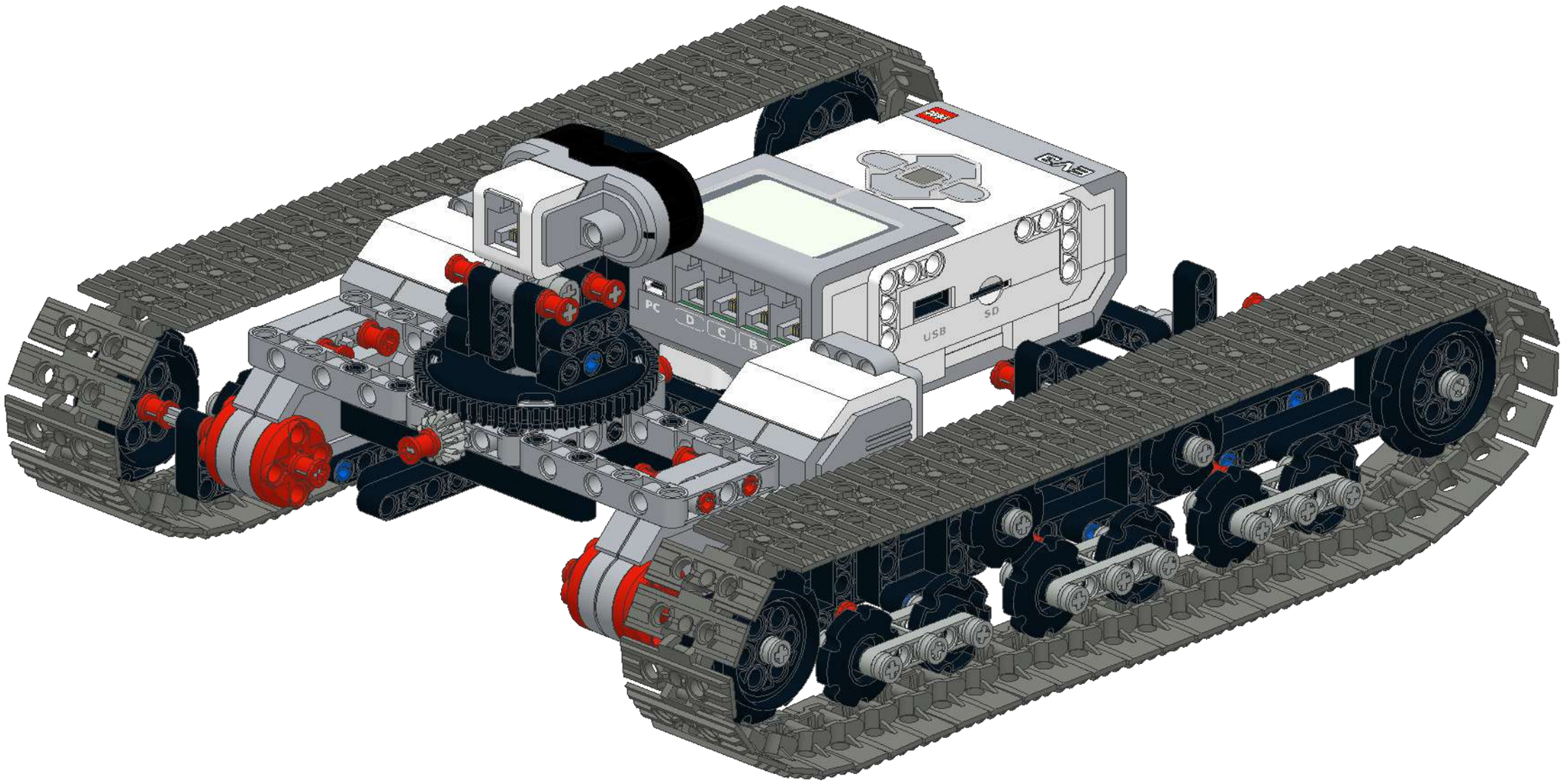

100 2x

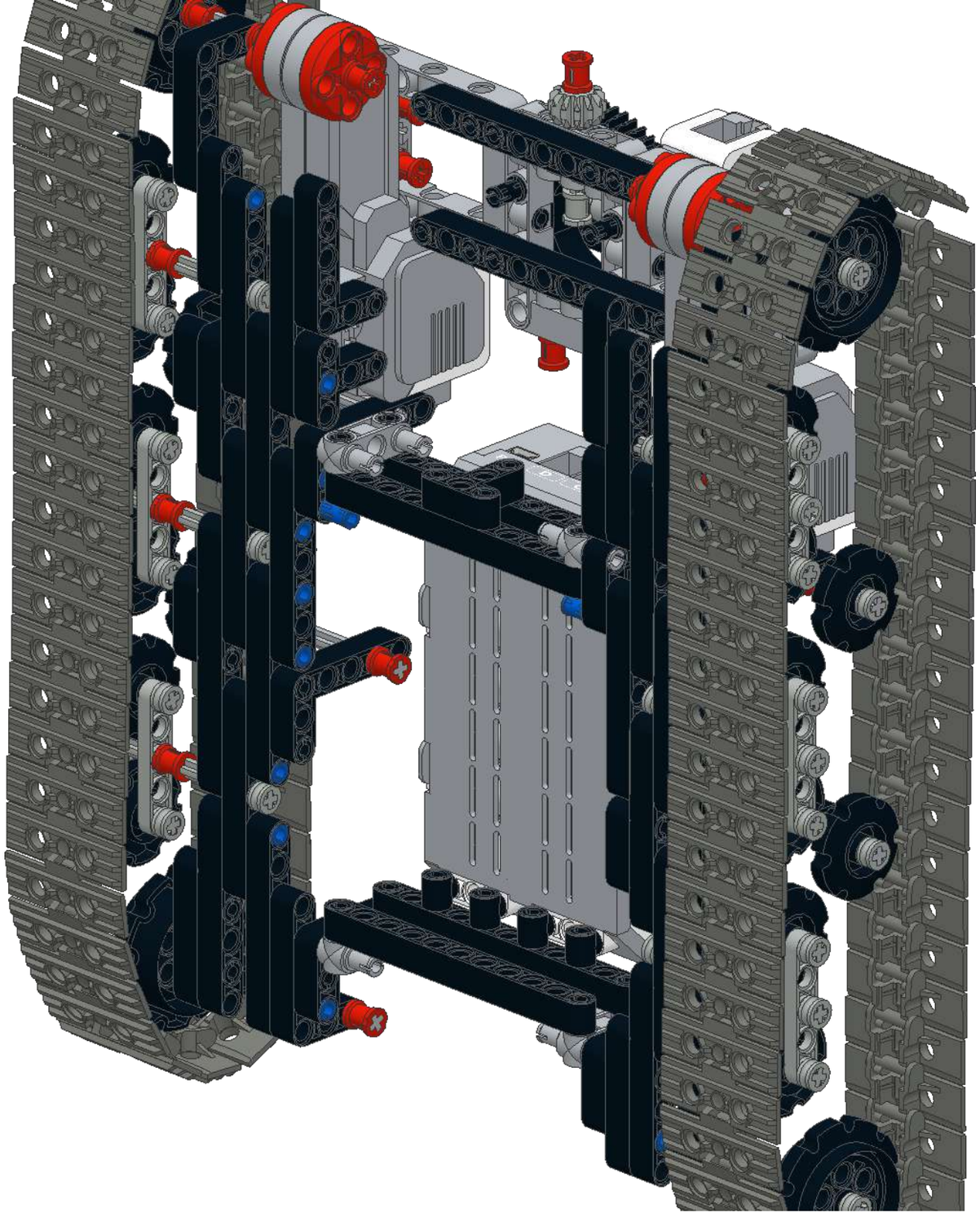

101 2x

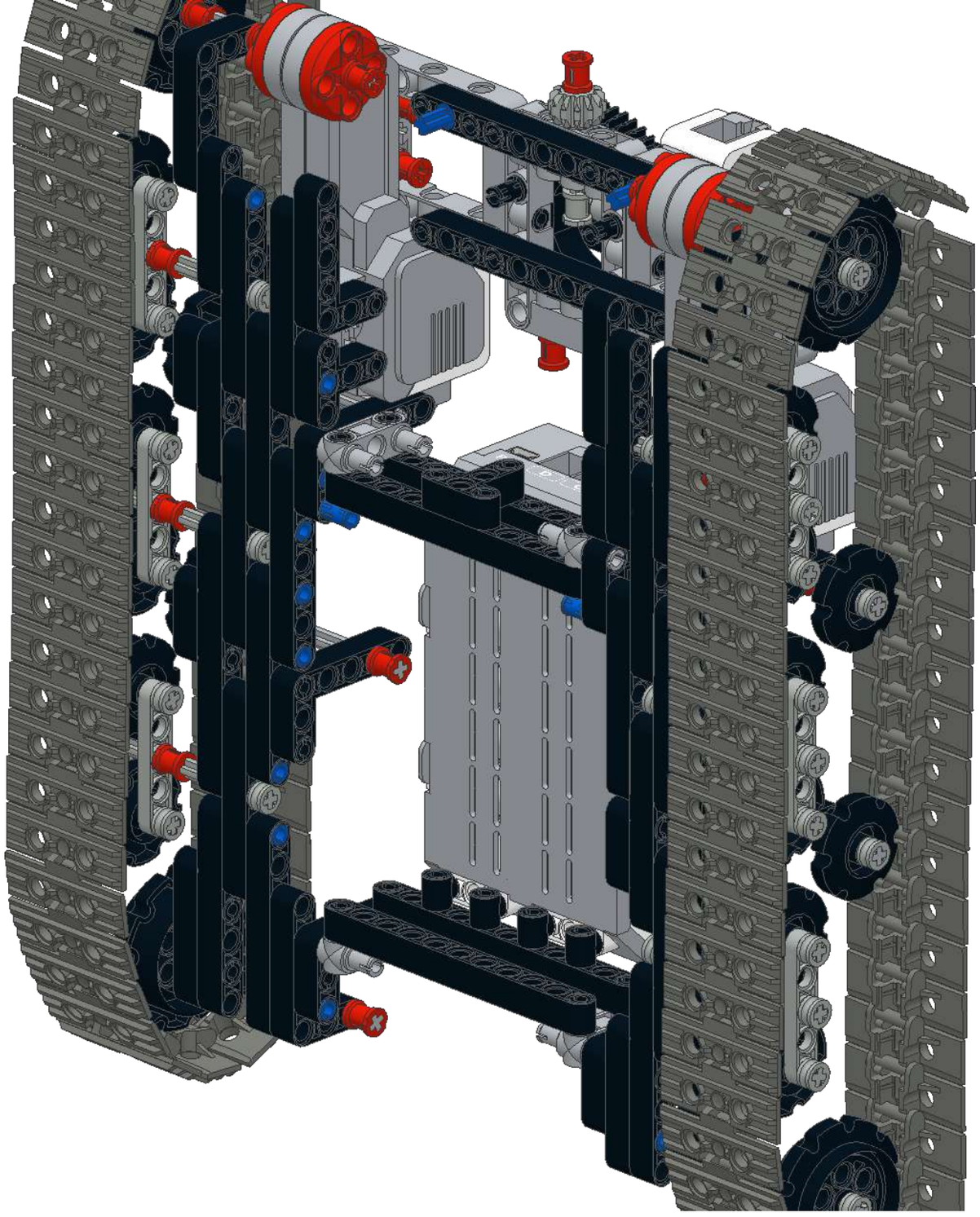

102

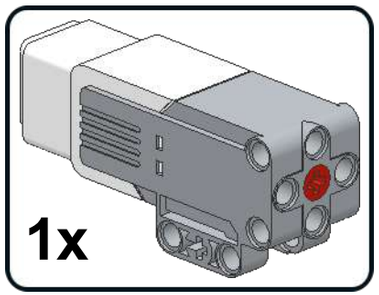

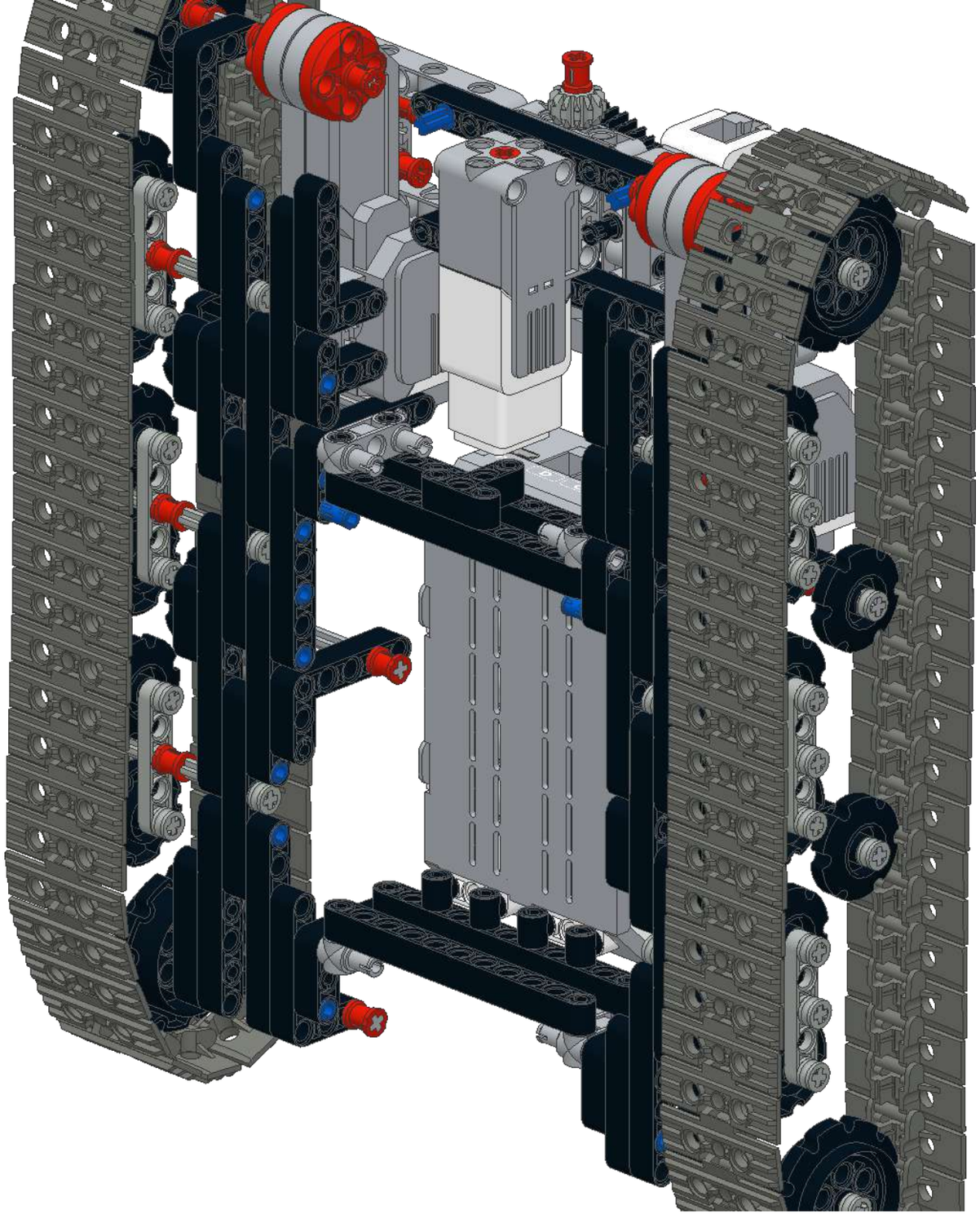

103 2x

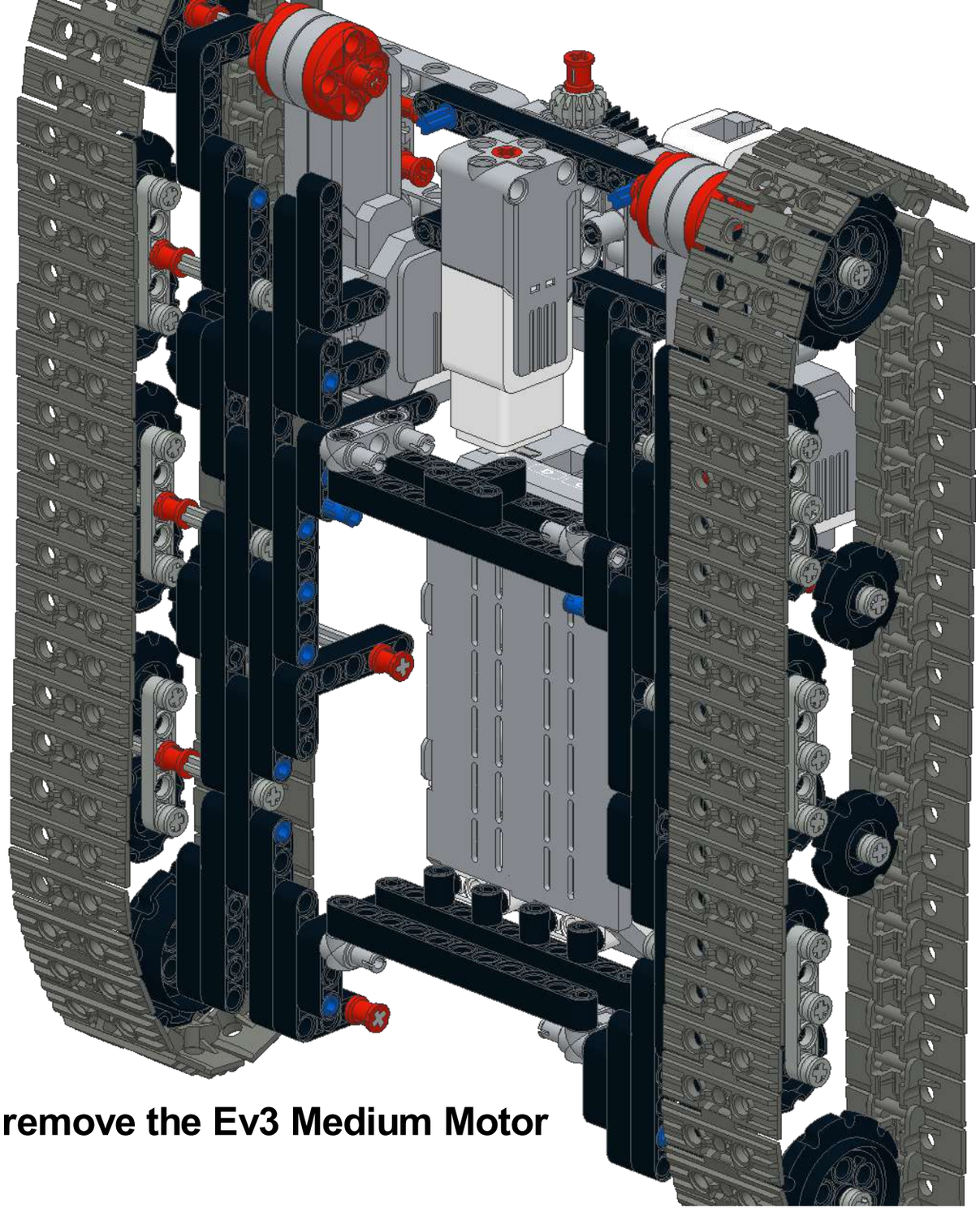

You could need to remove the Ev3 Medium Motor

104

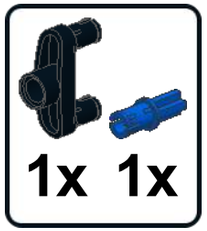

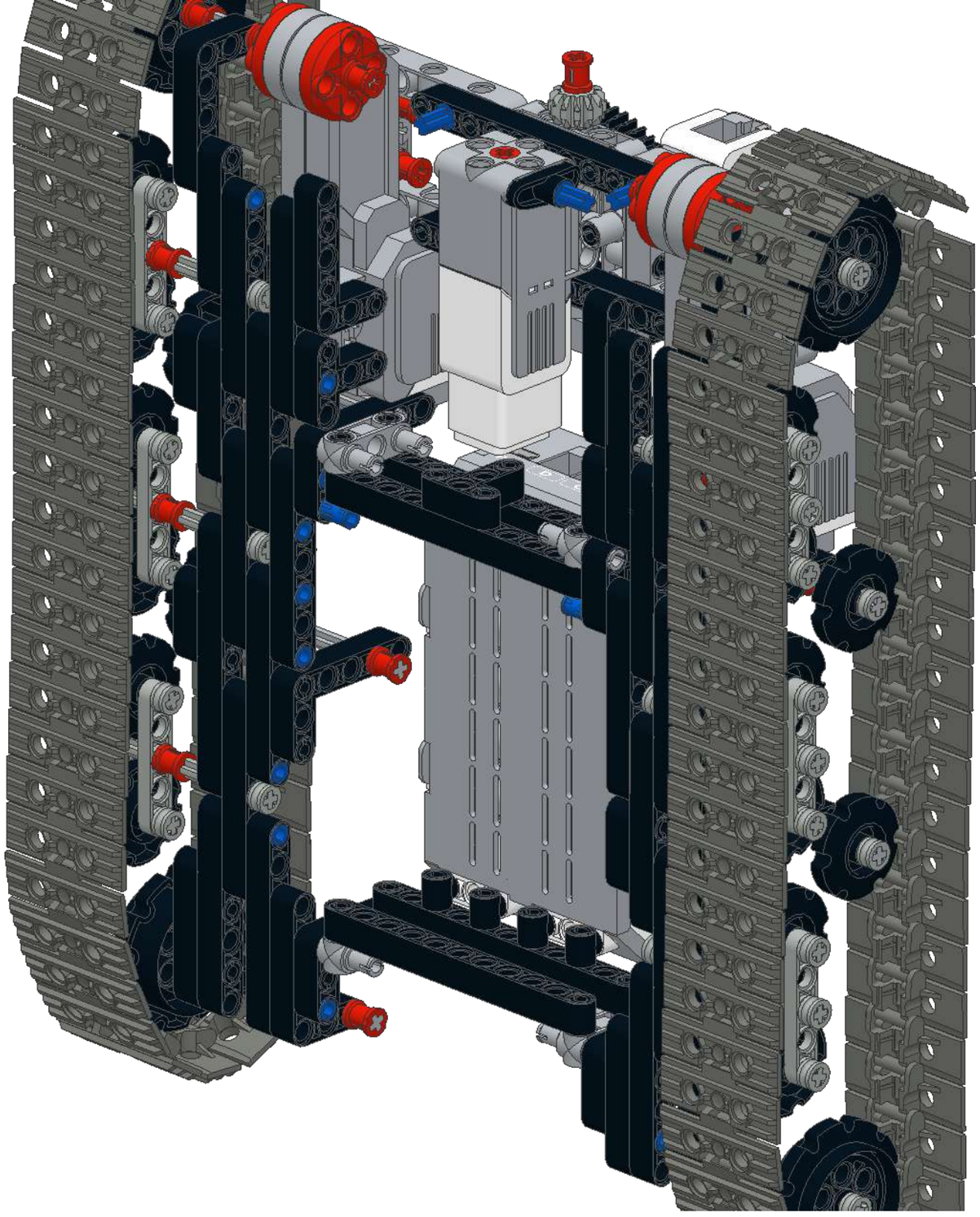

105

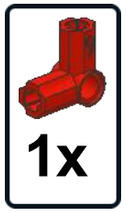

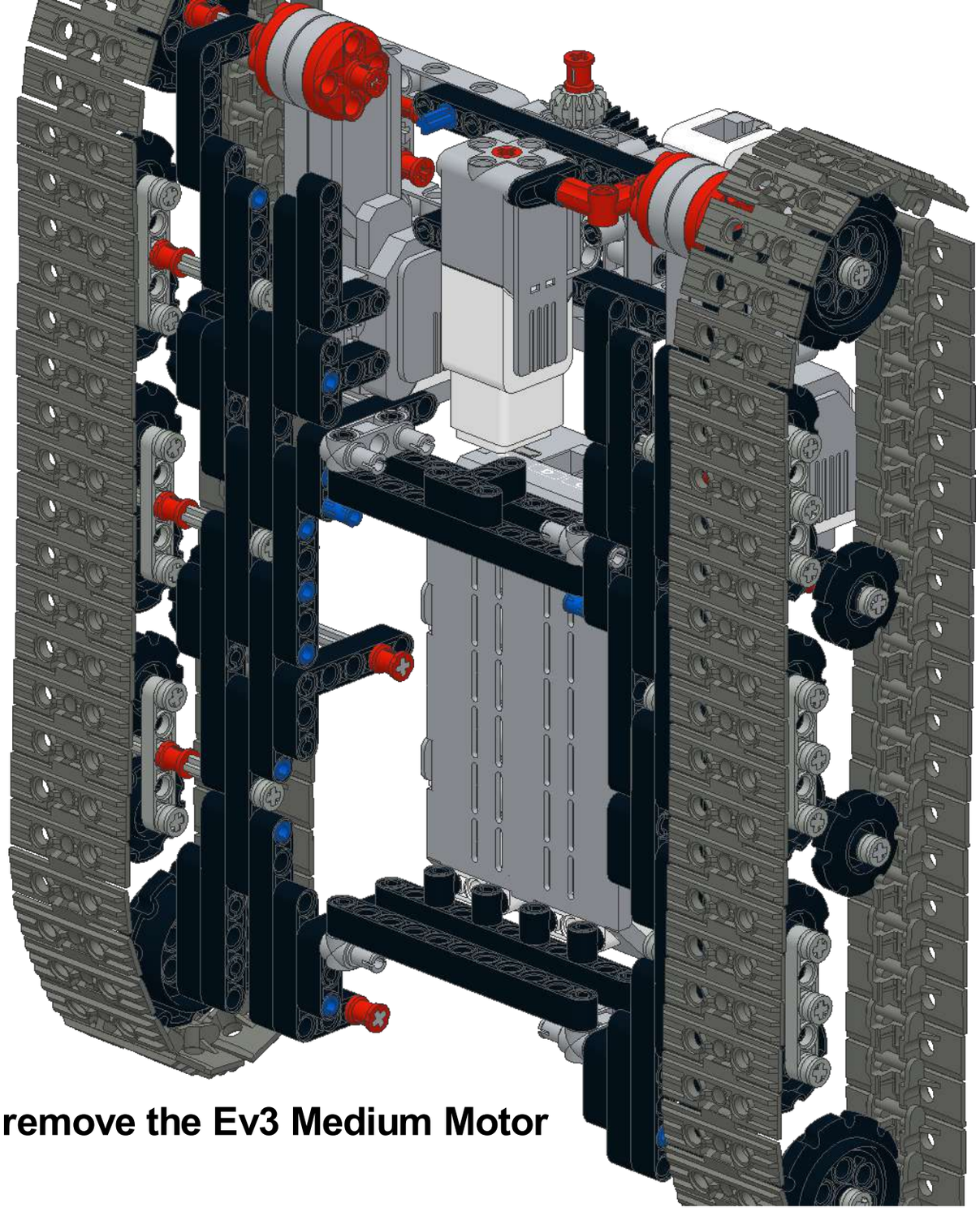

You could need to remove the Ev3 Medium Motor

106

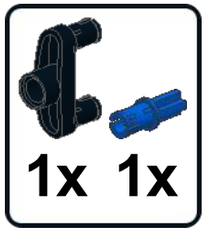

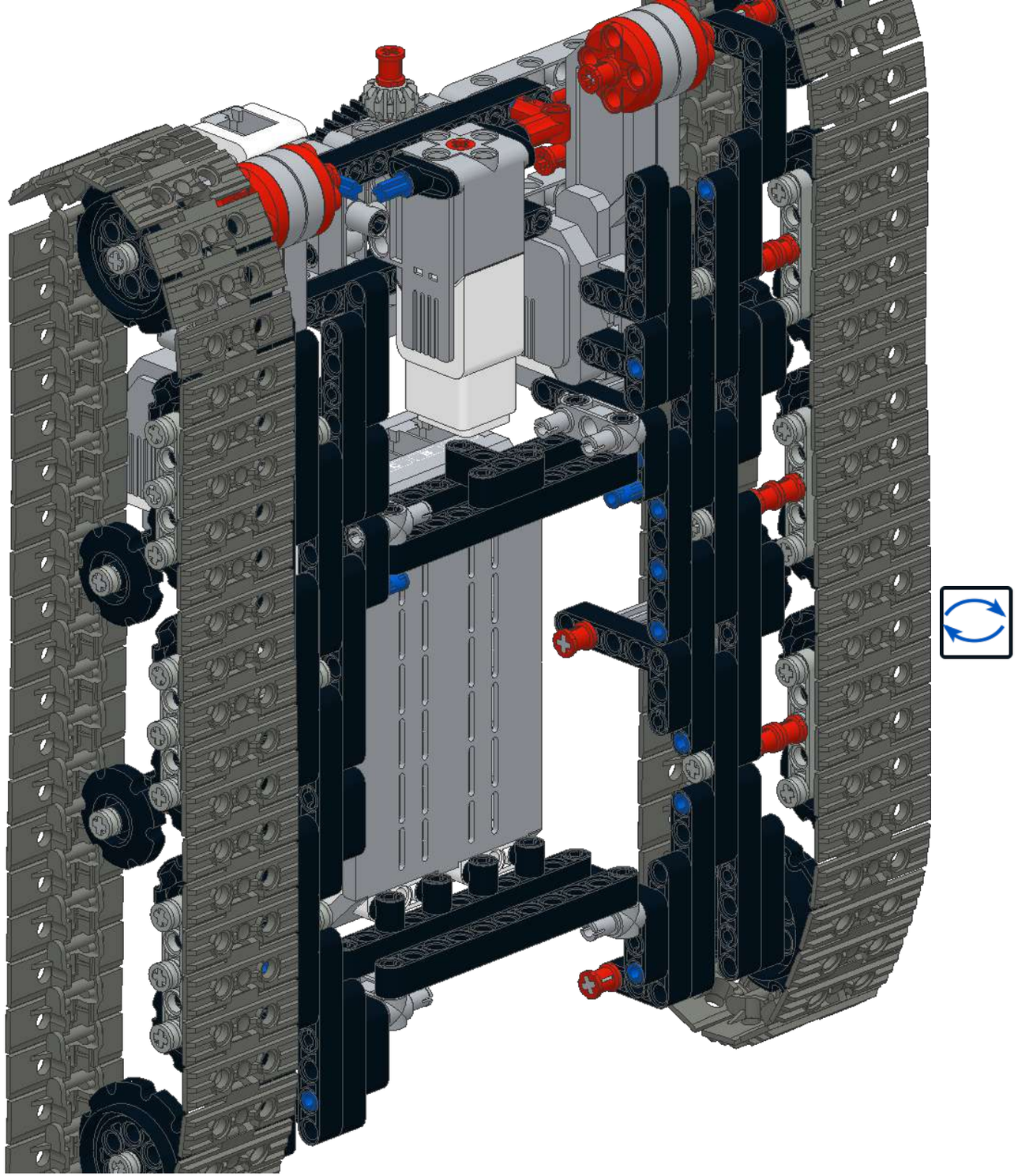

107

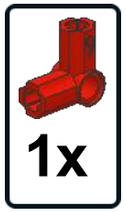

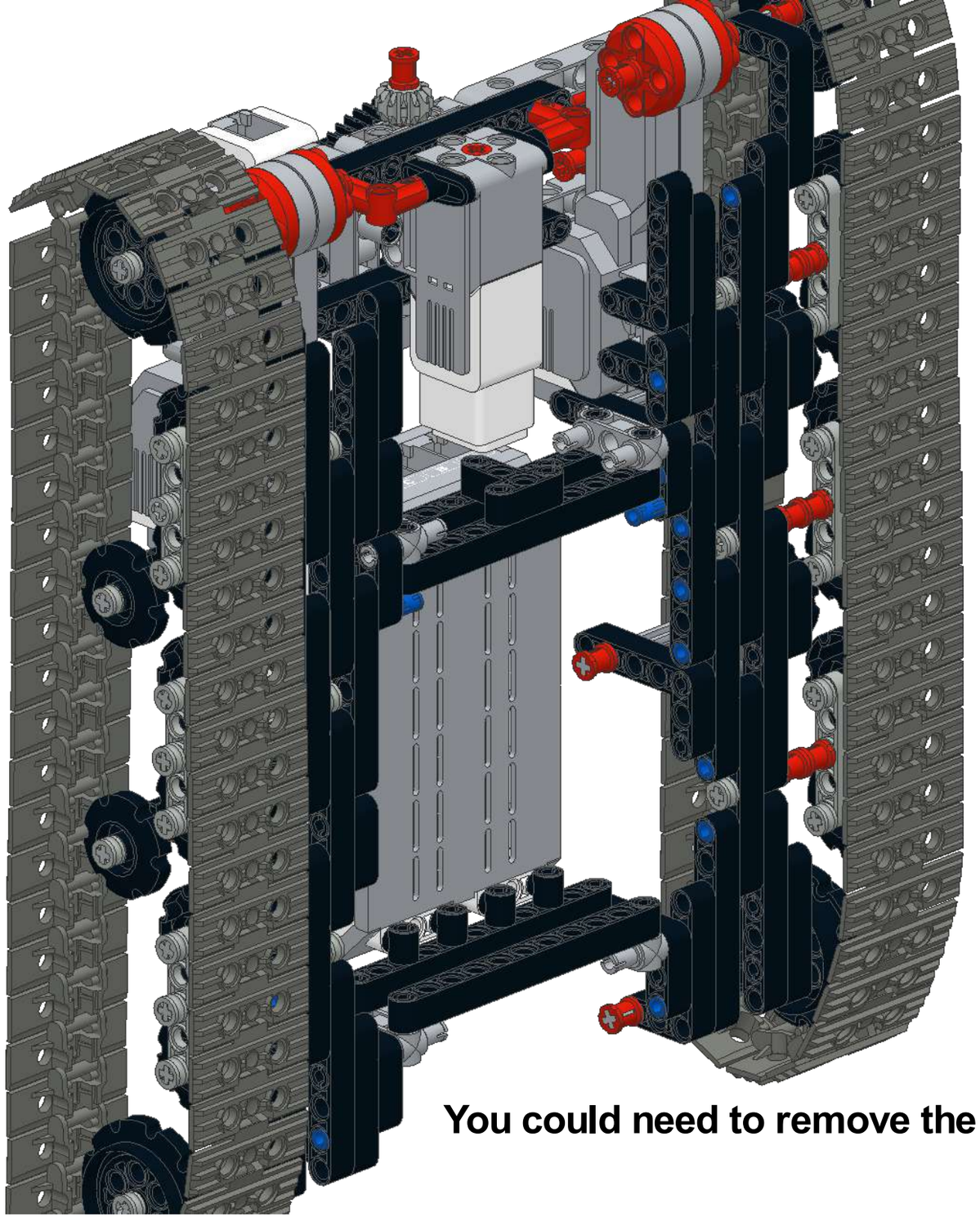

You could need to remove the Ev3 Medium Motor

108

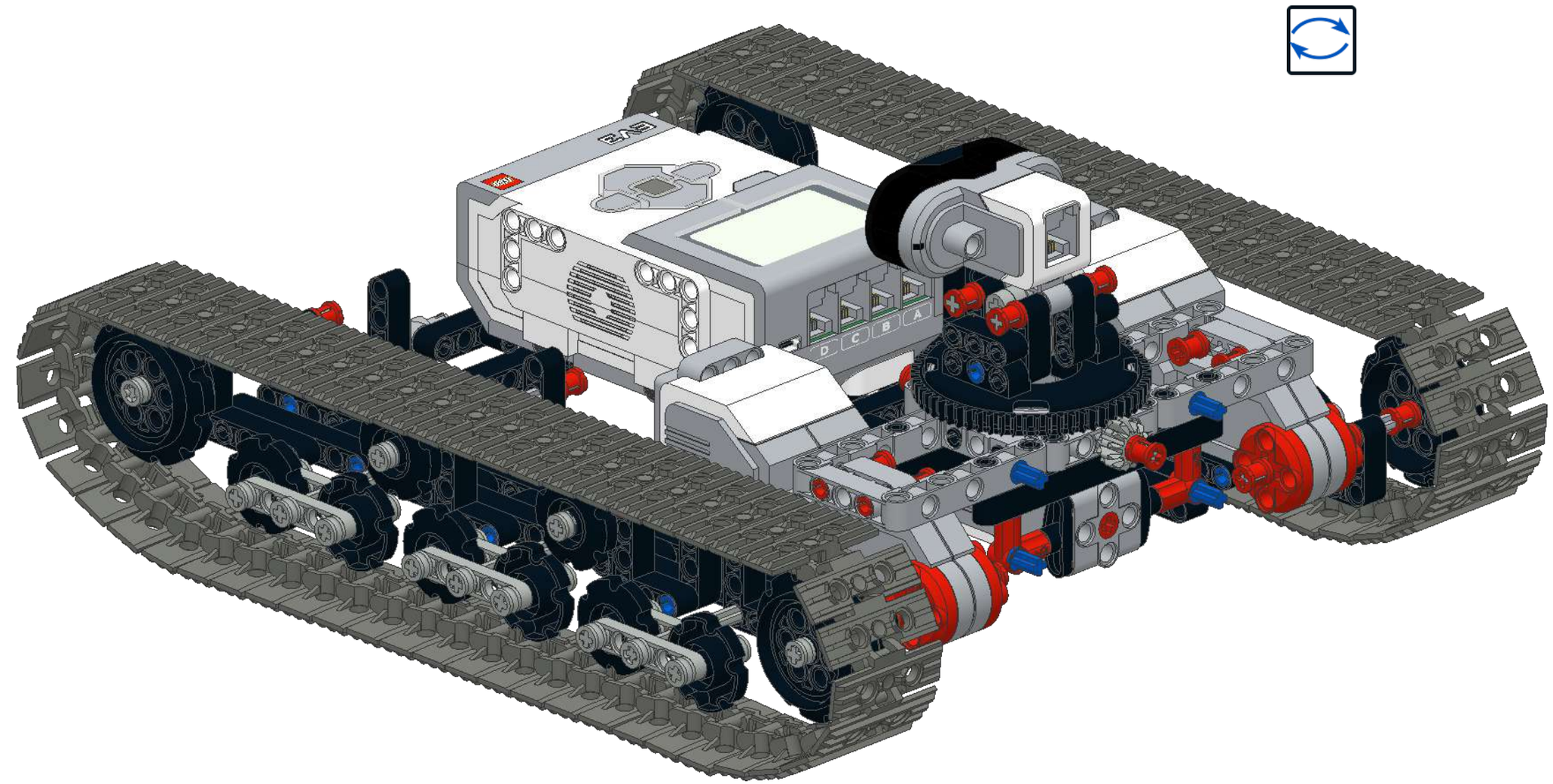

109

4x

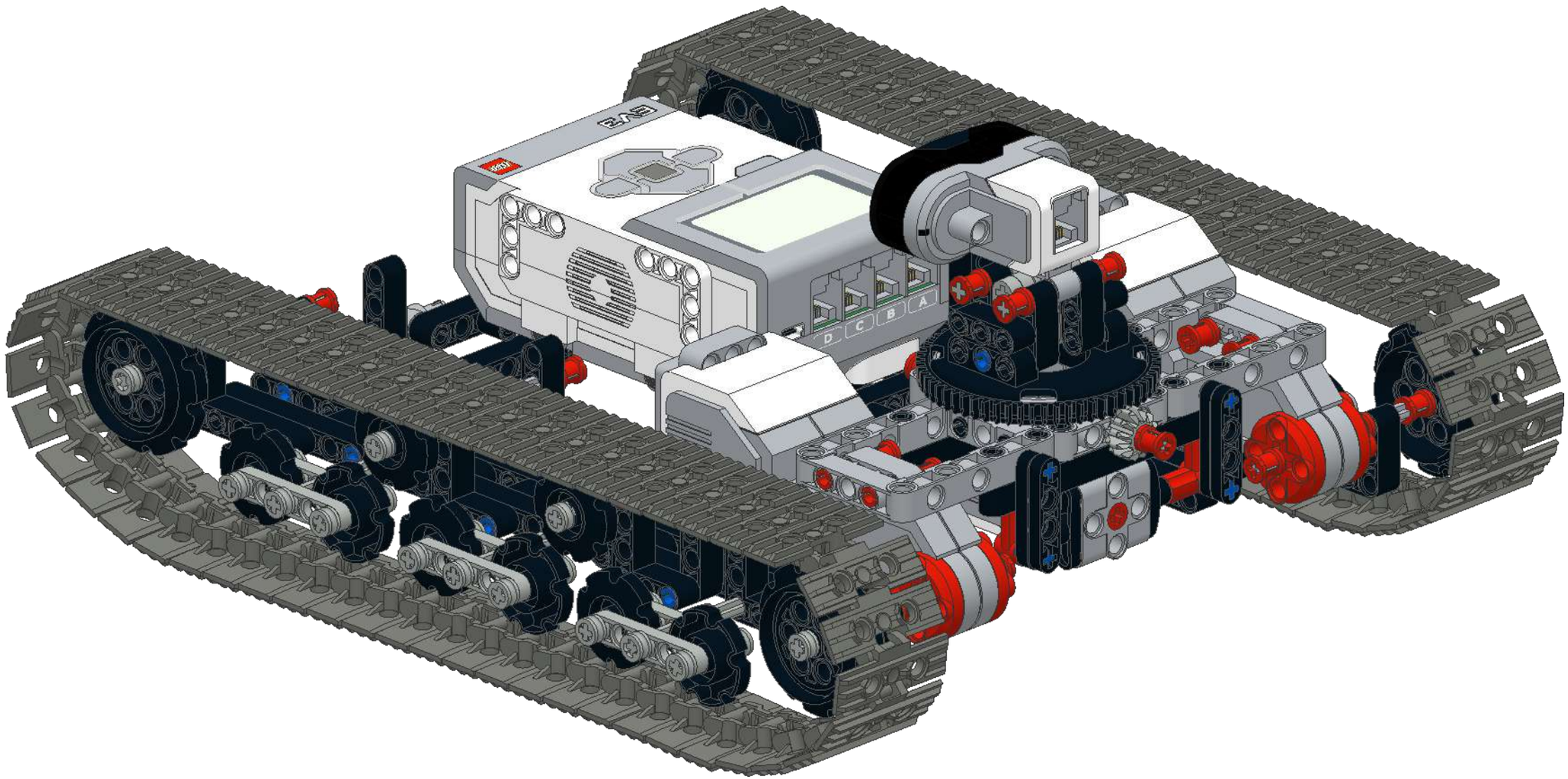

110

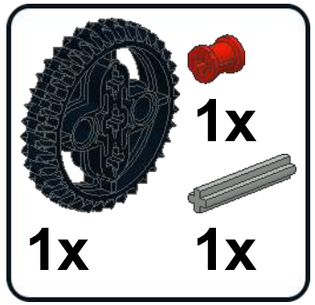

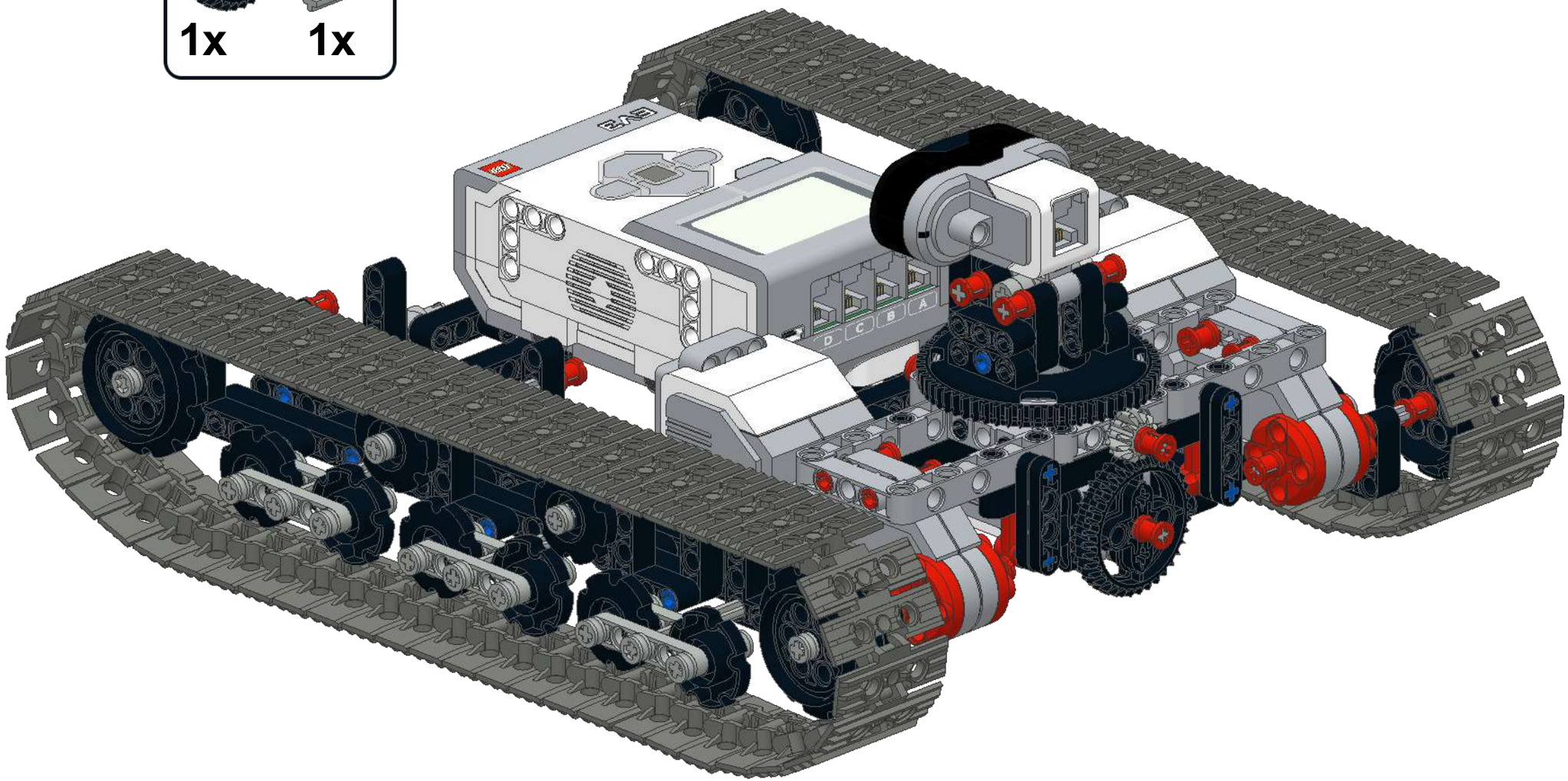

111

5x

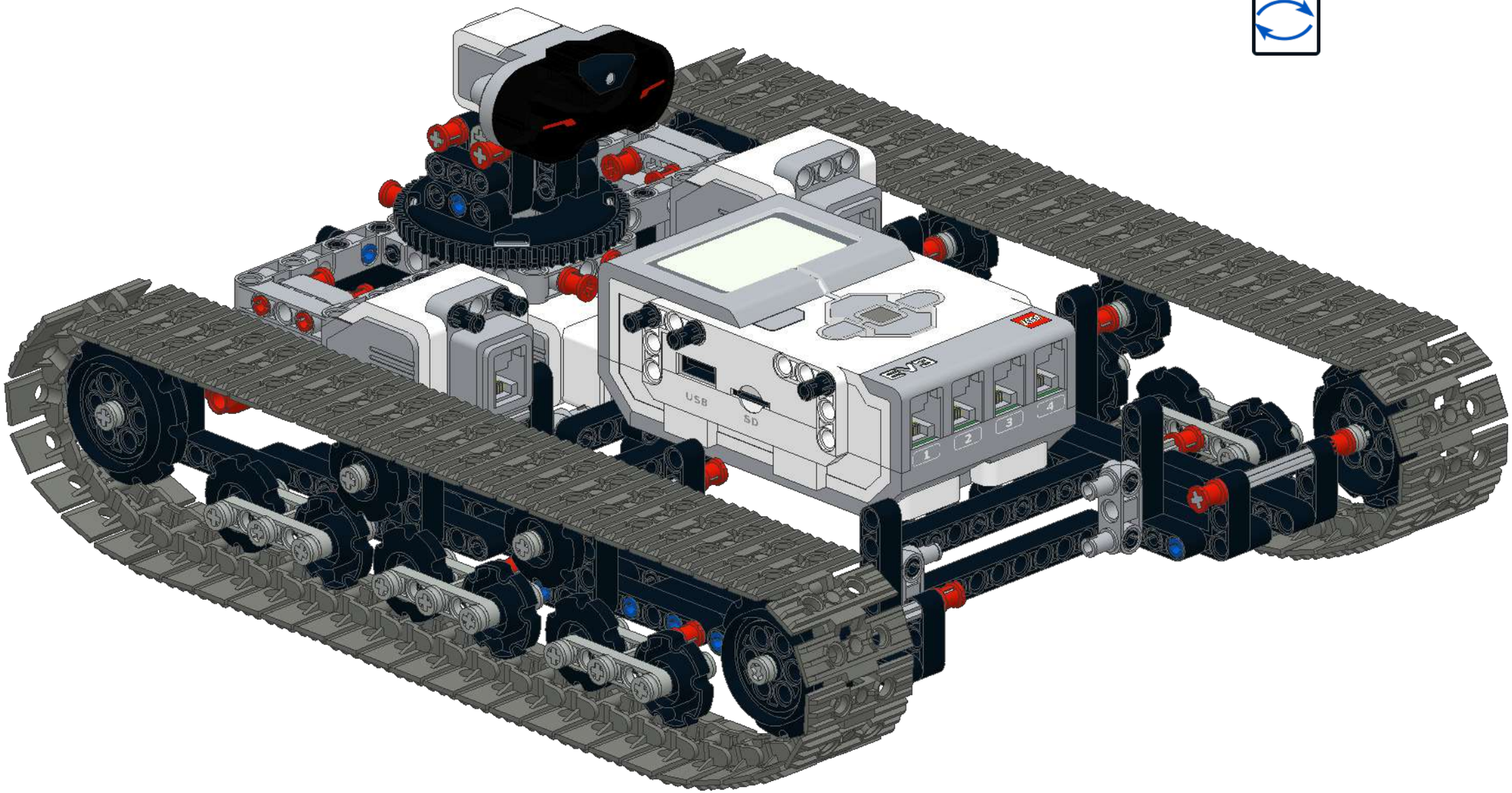

112

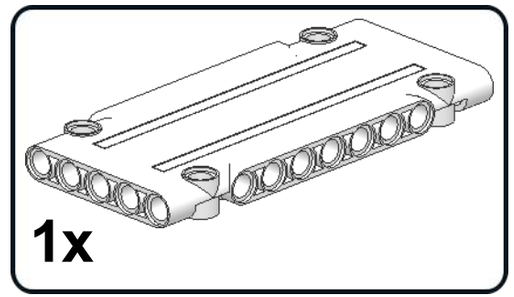

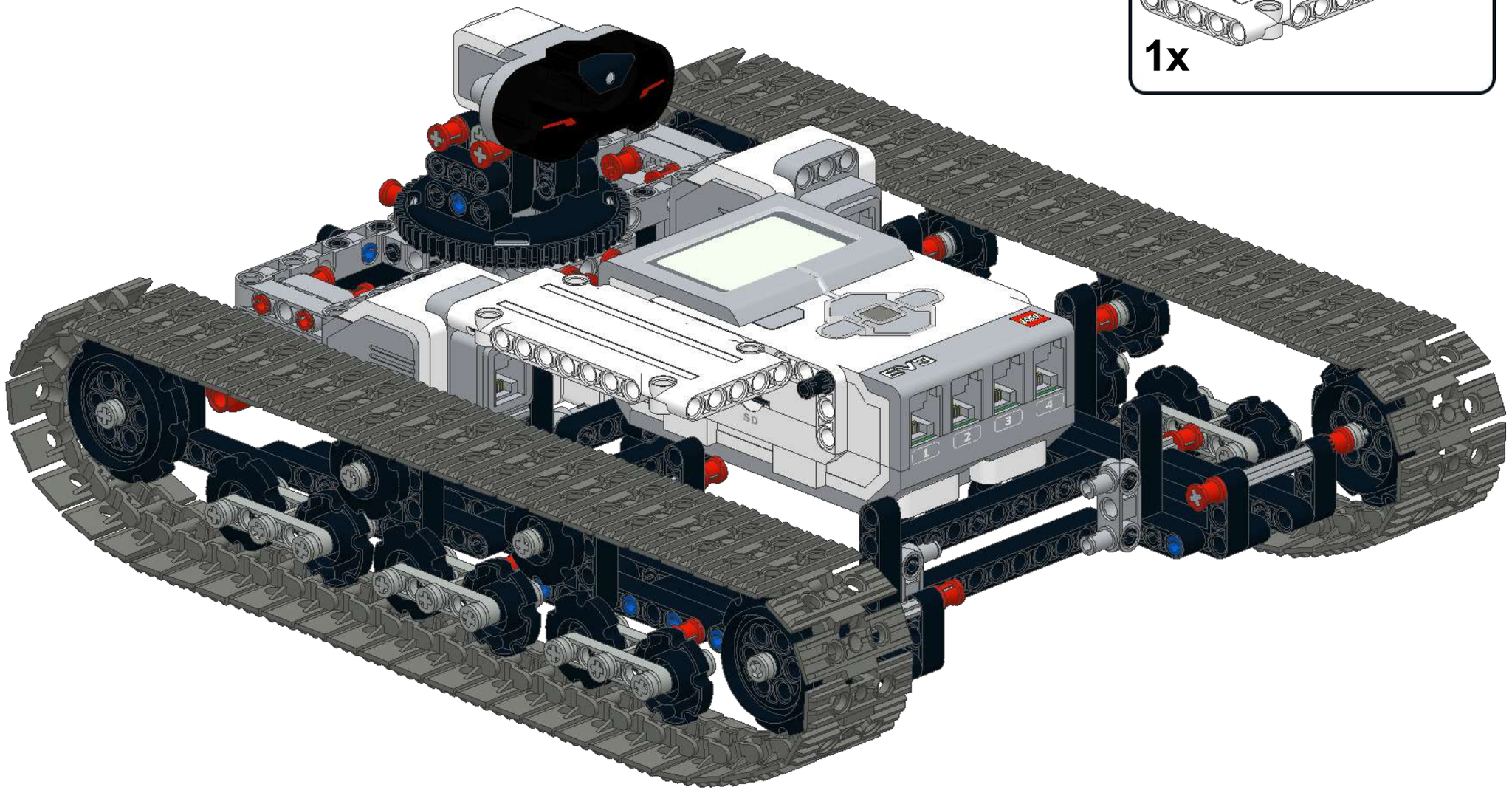

113

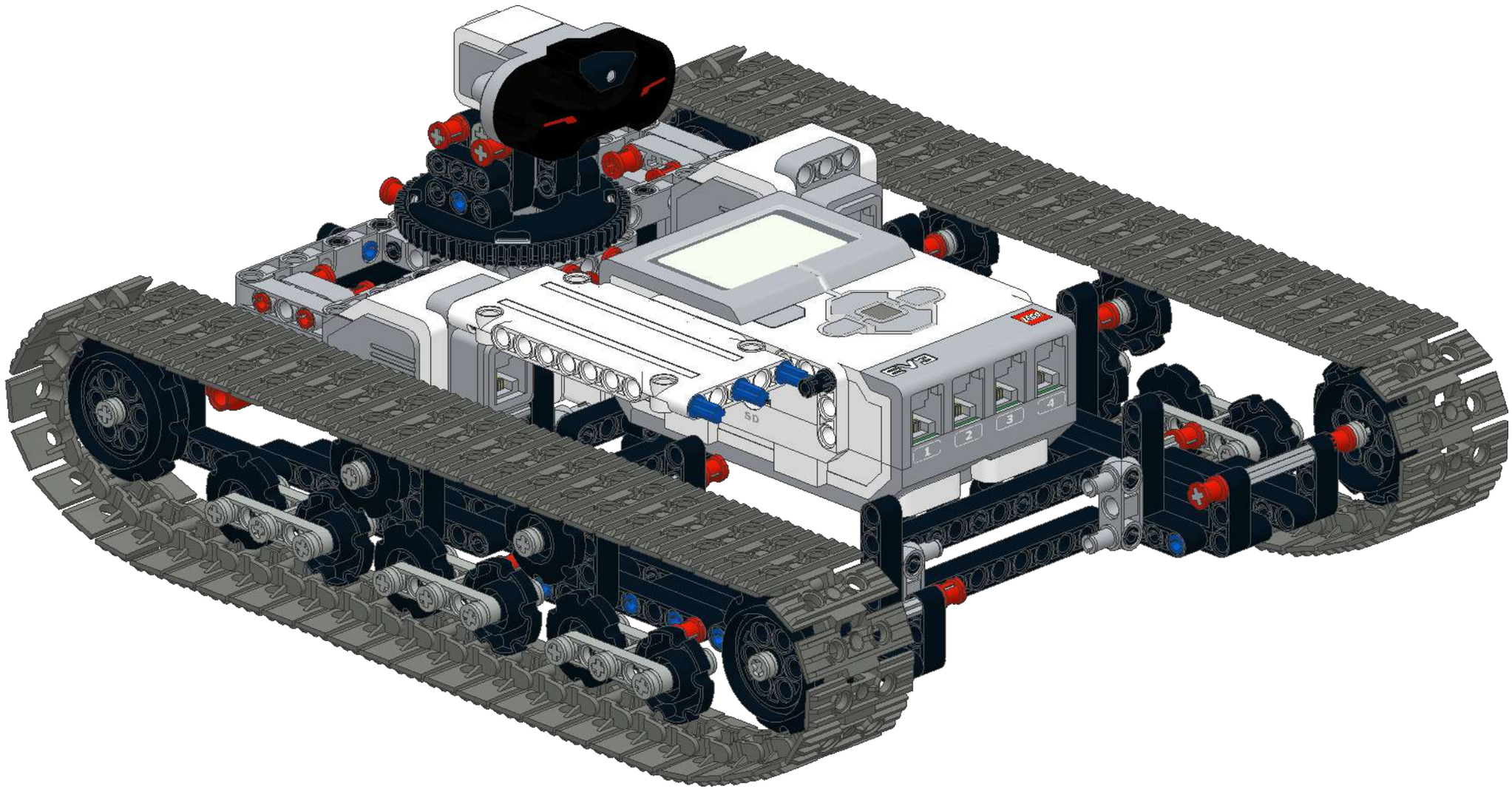

114

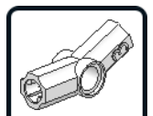

3x

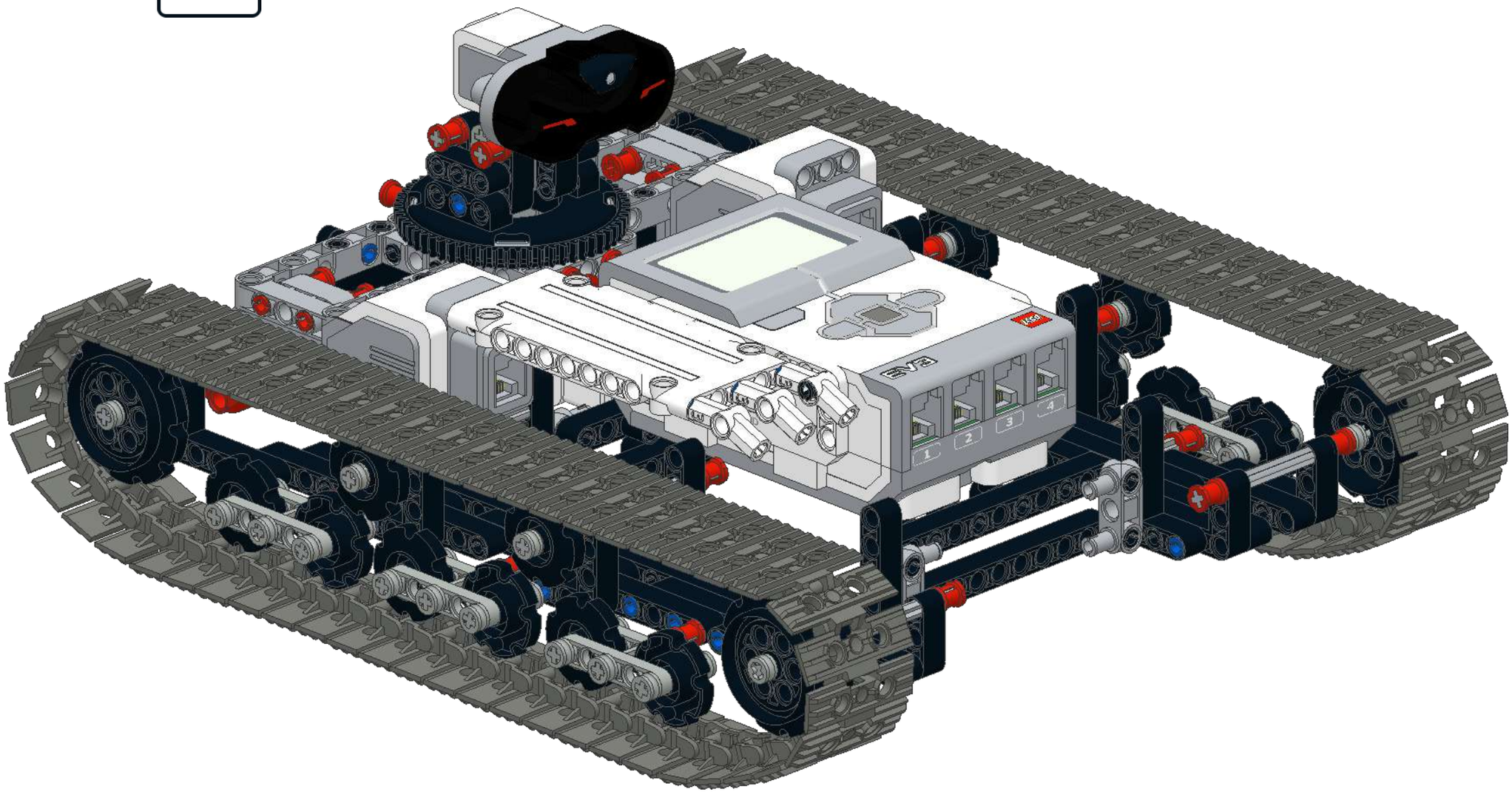

115 3x

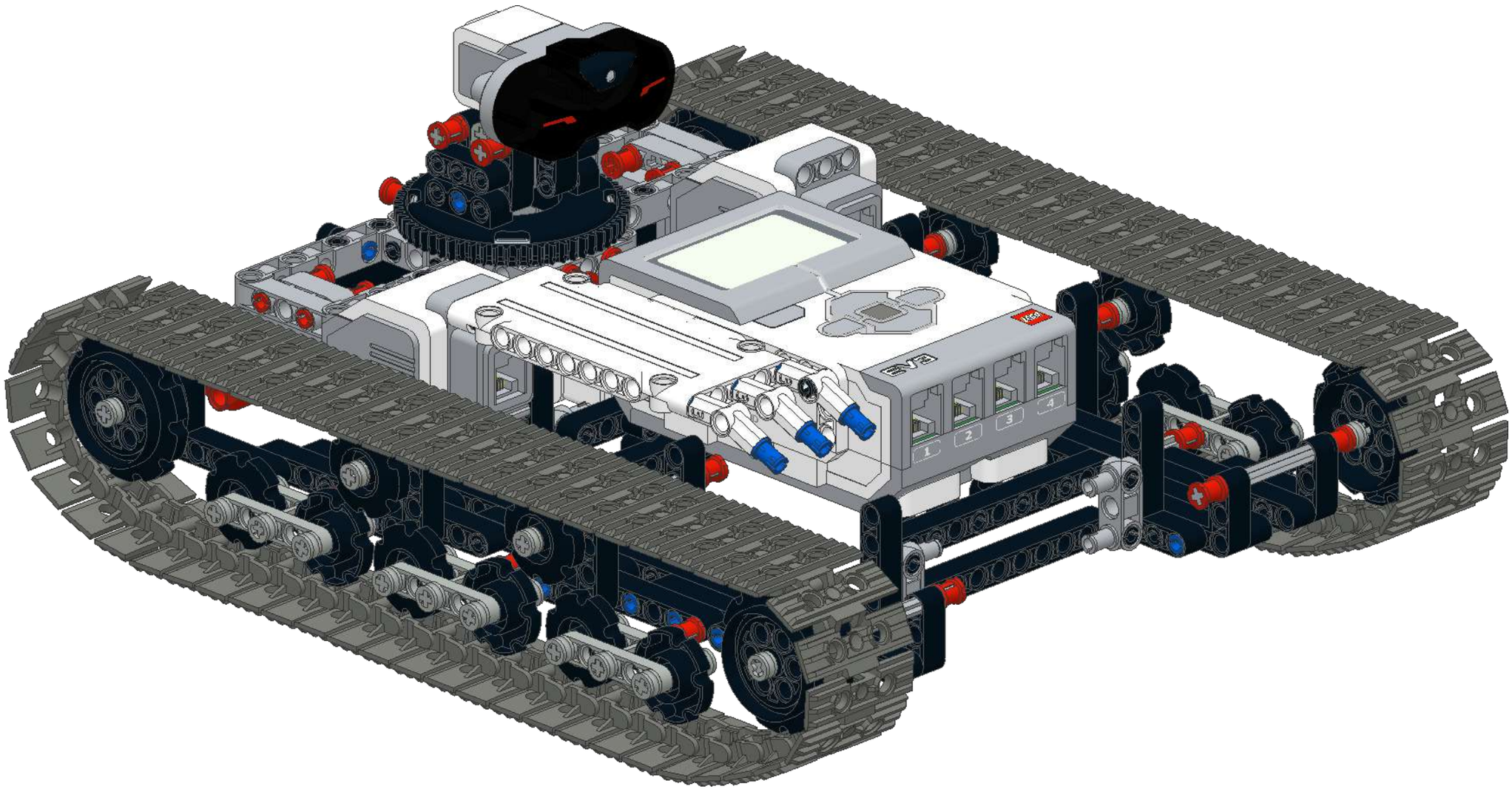

116

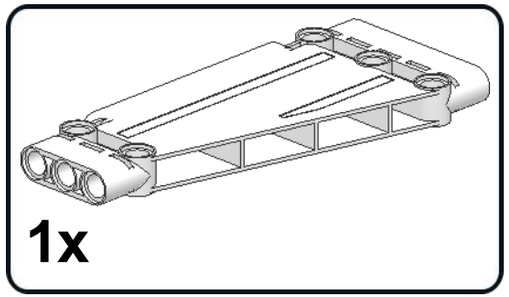

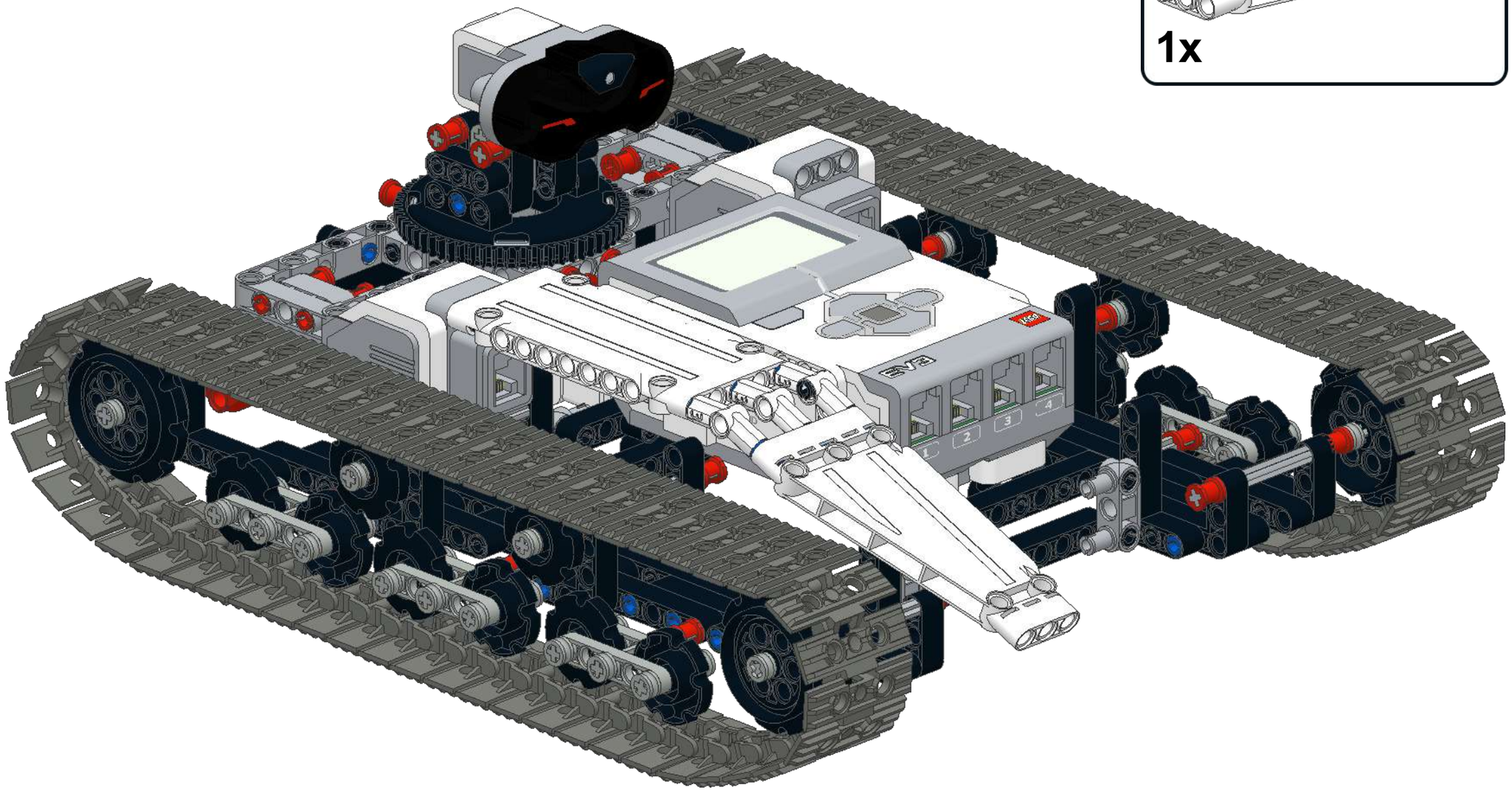

117

5x

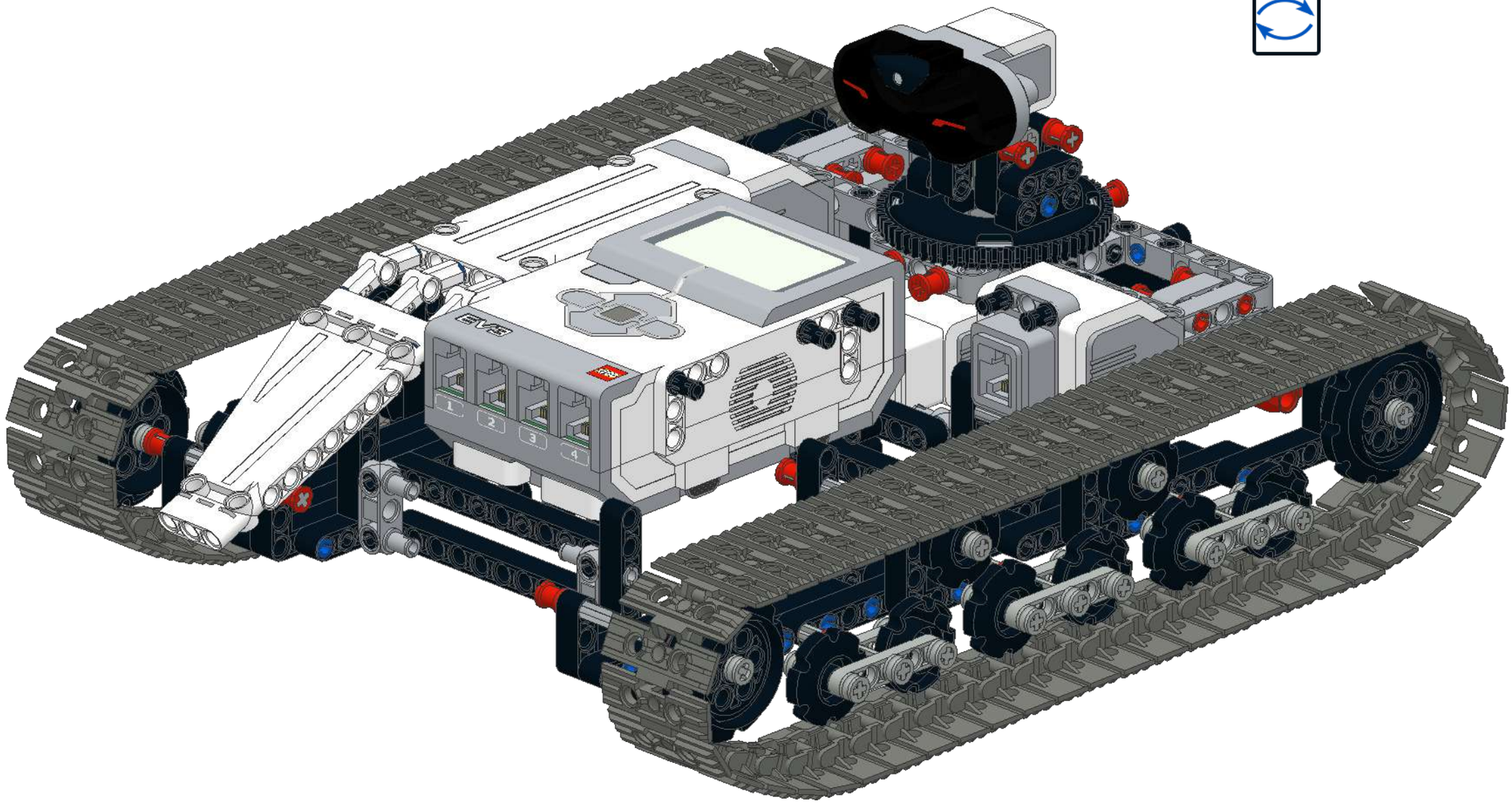

118

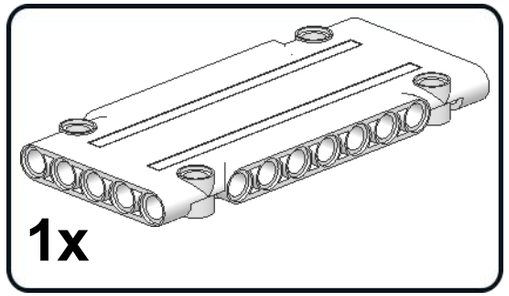

1x

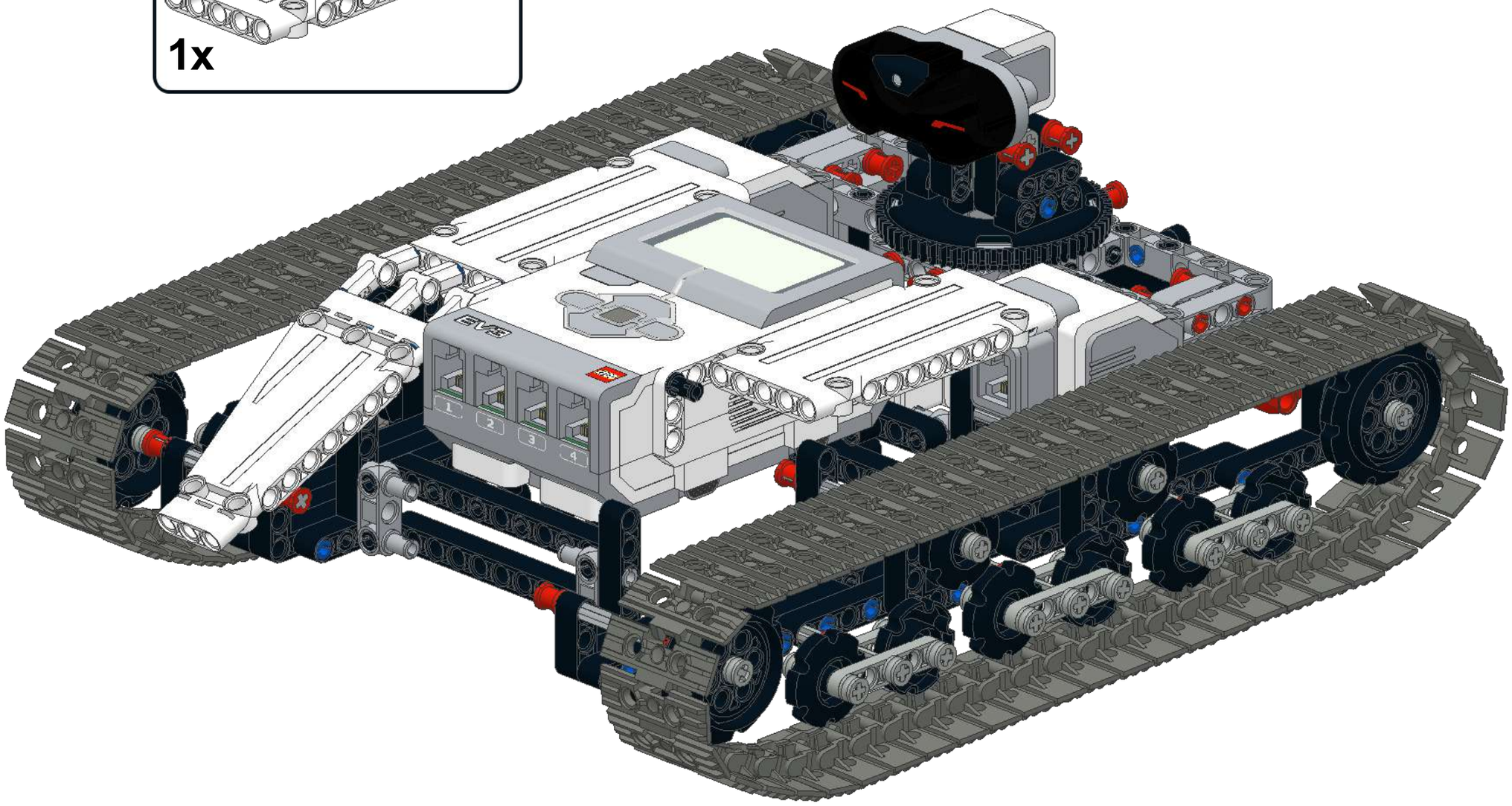

119 3x

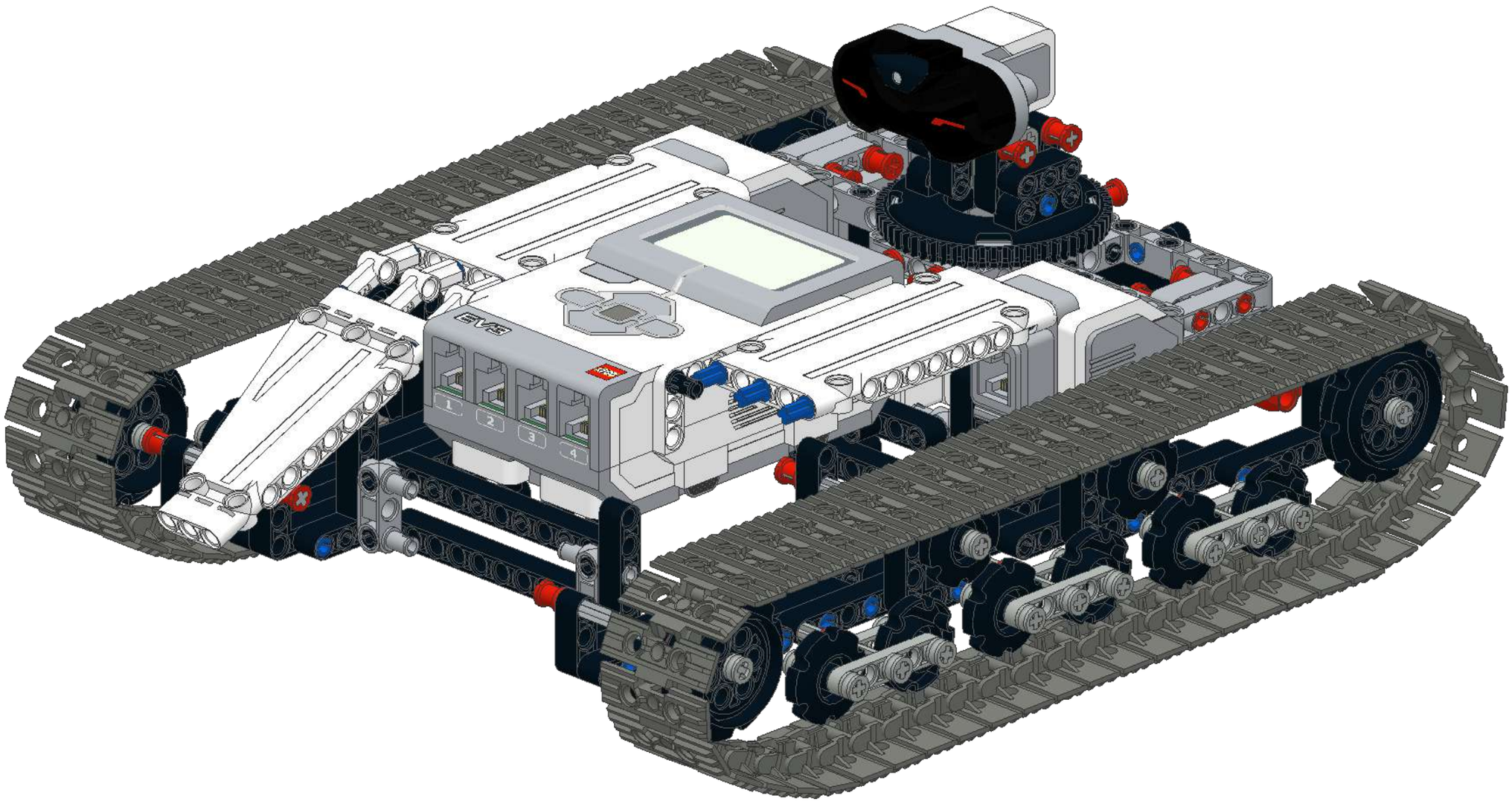

120

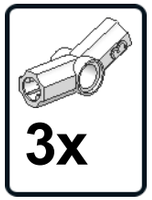

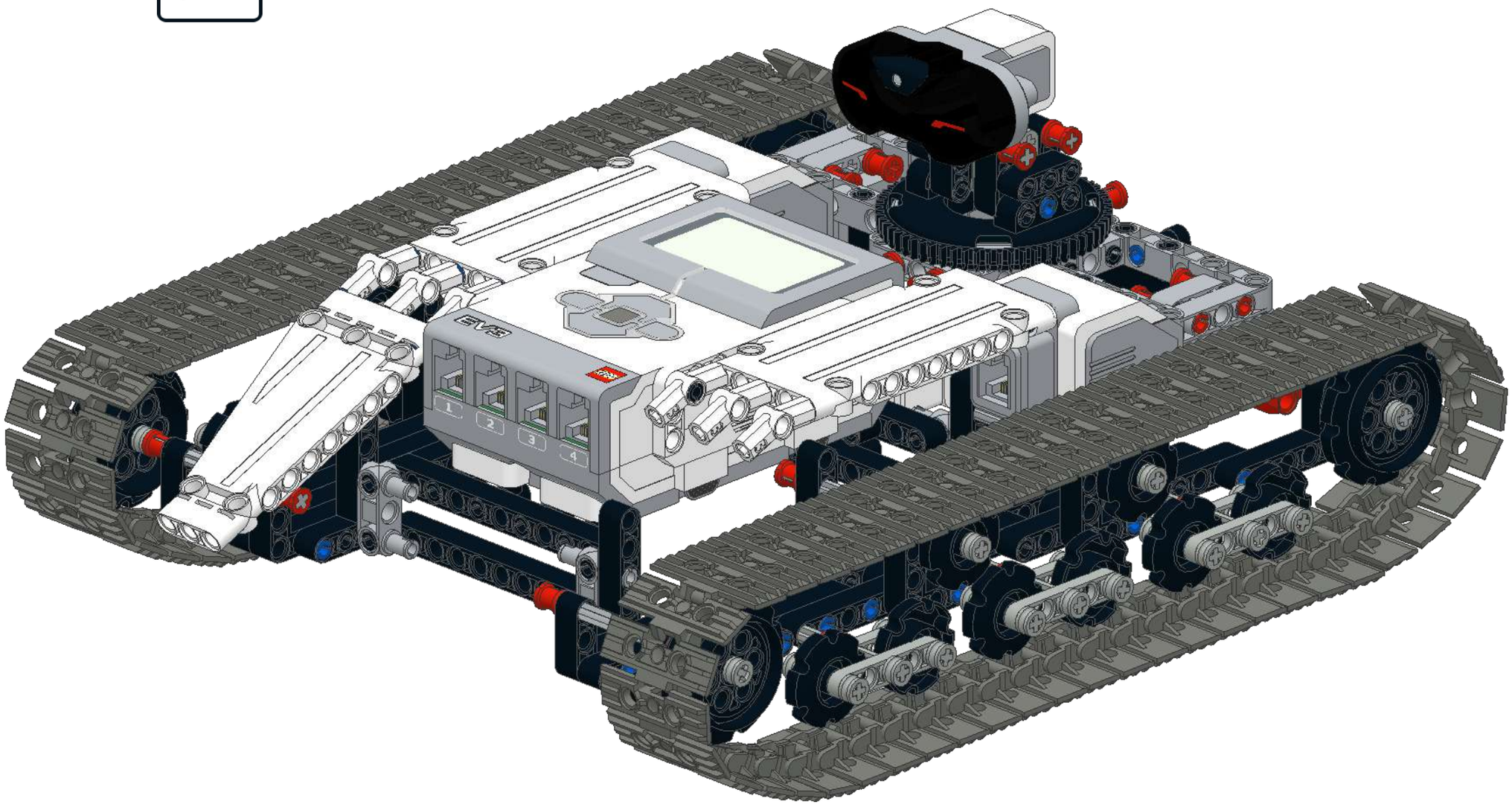

121

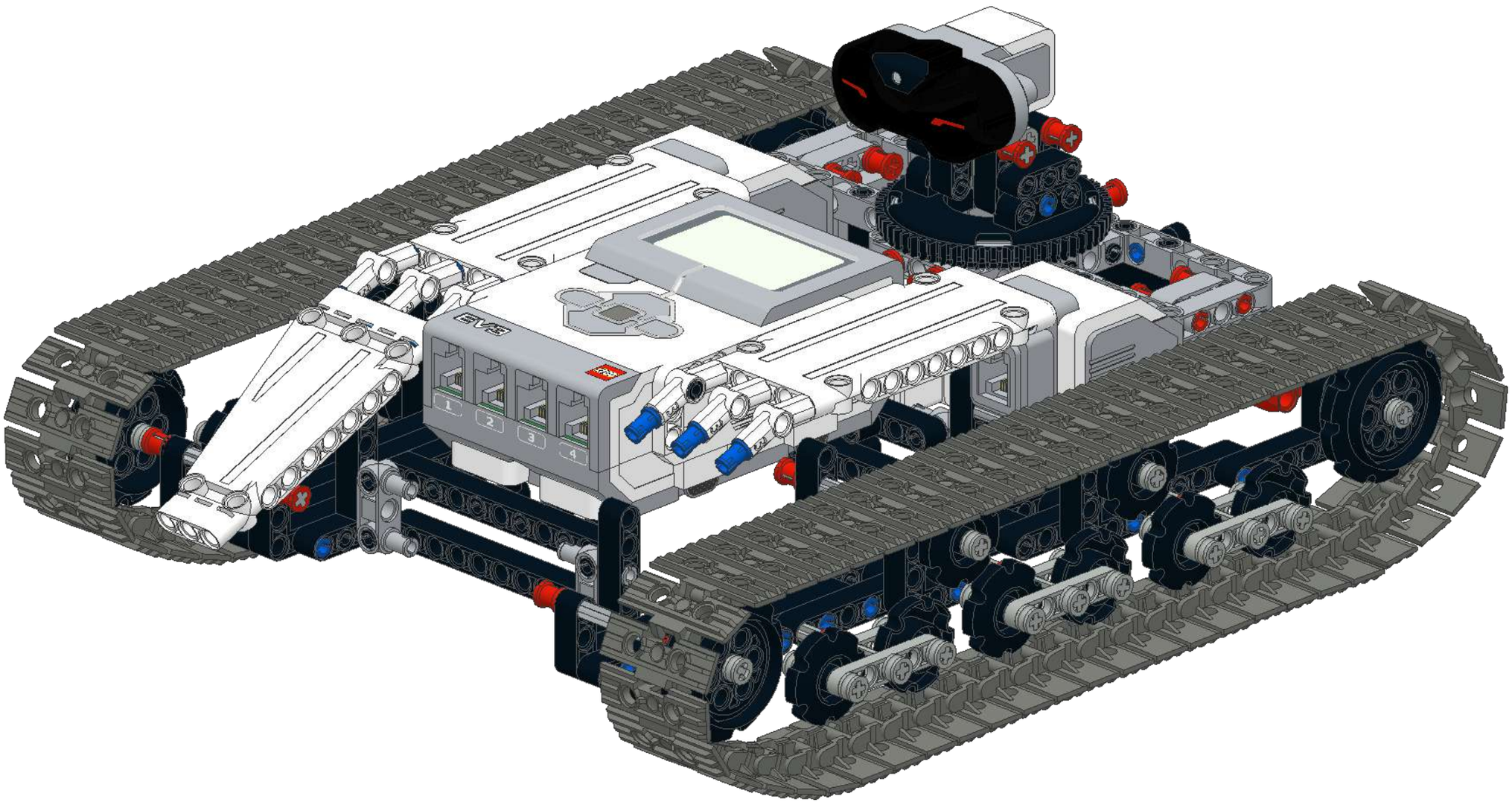

122

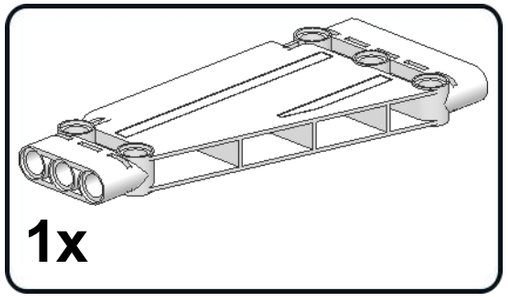

1x

123

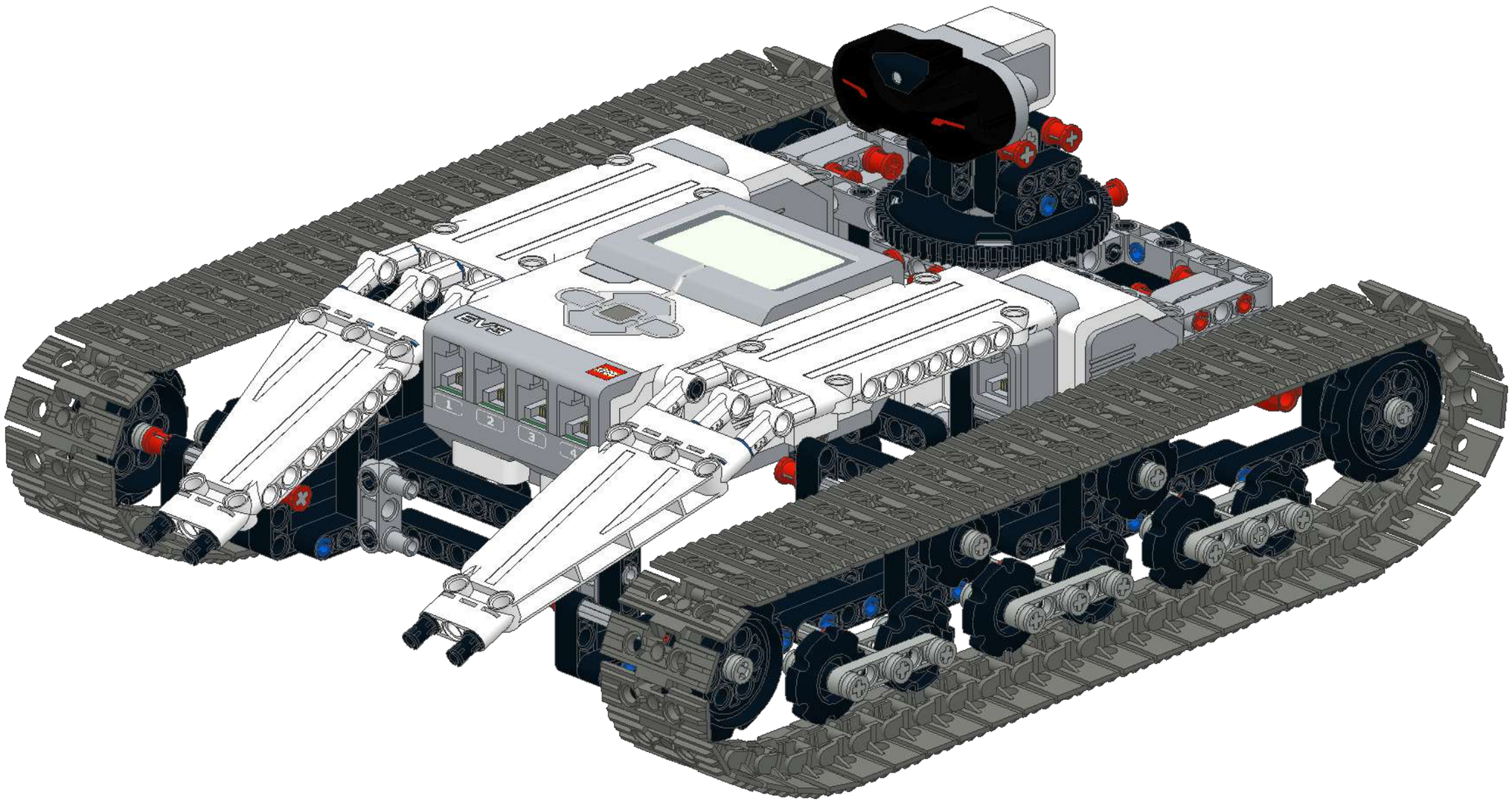

124

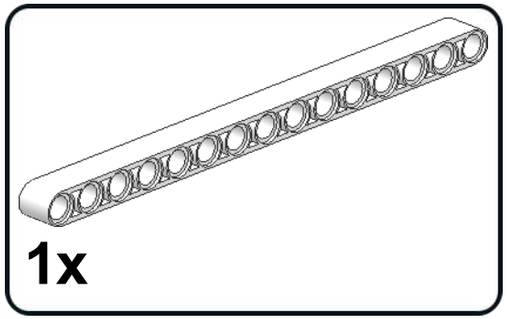

1x

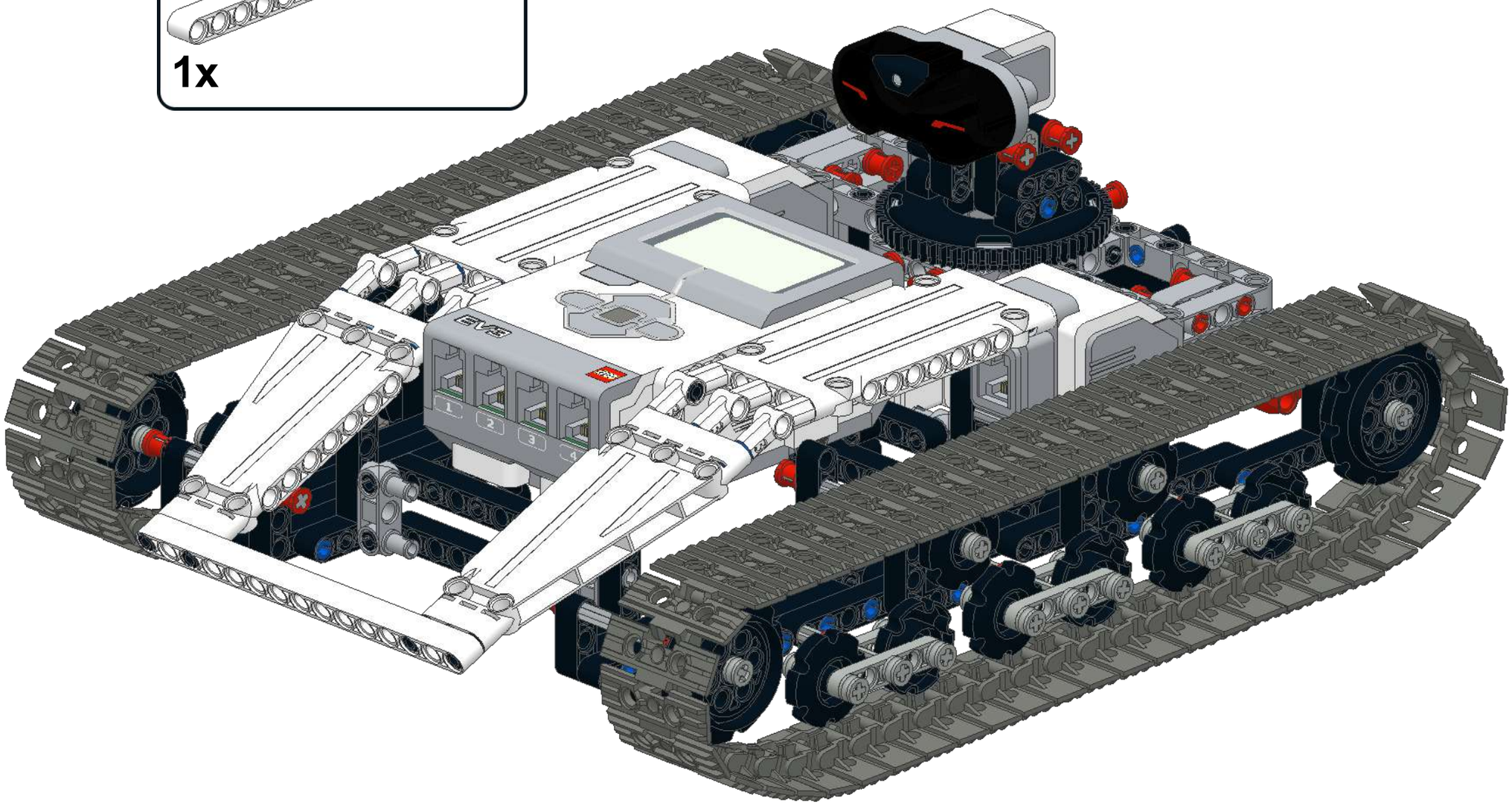

125

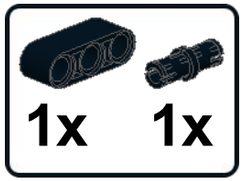

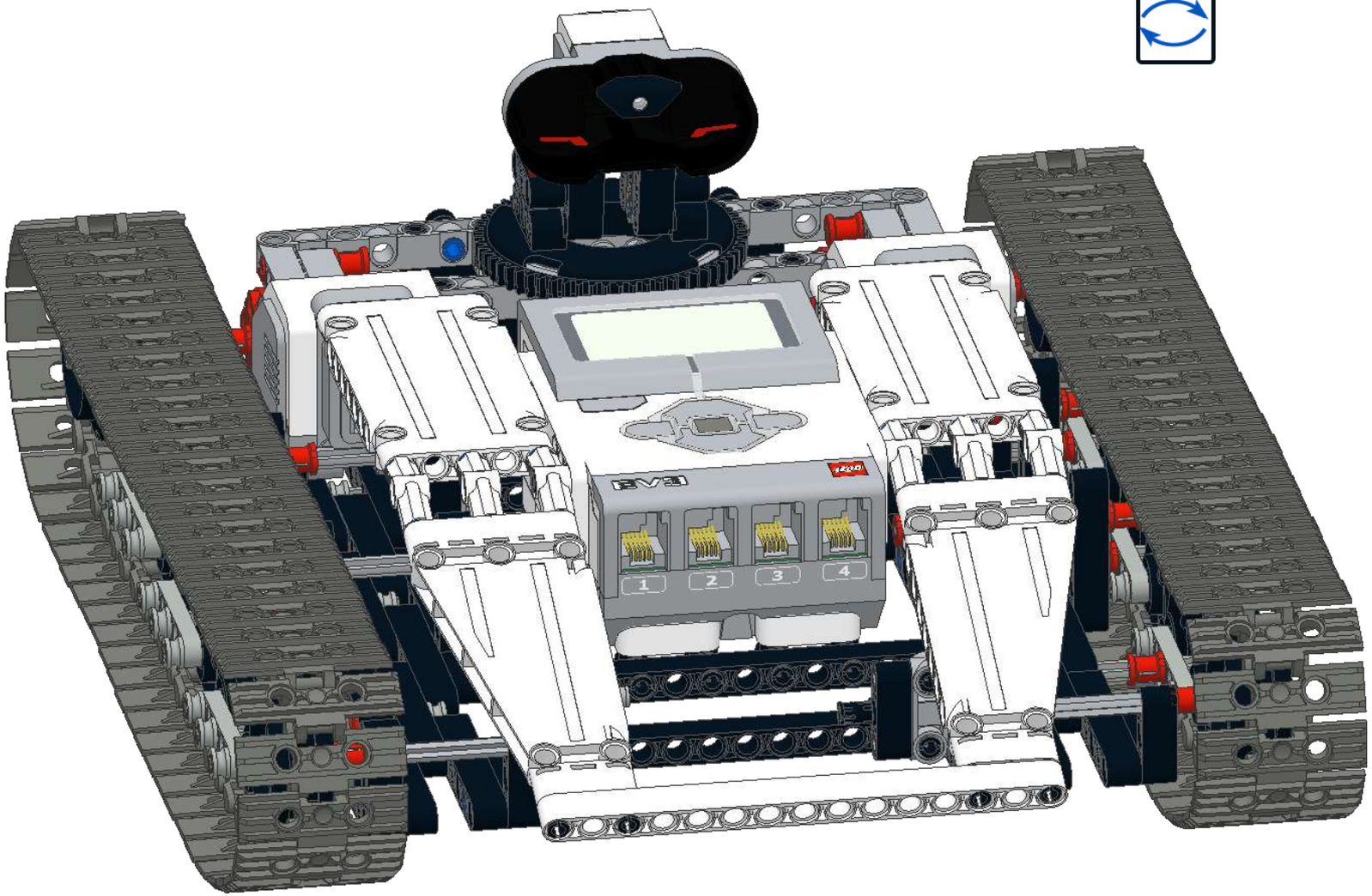

126

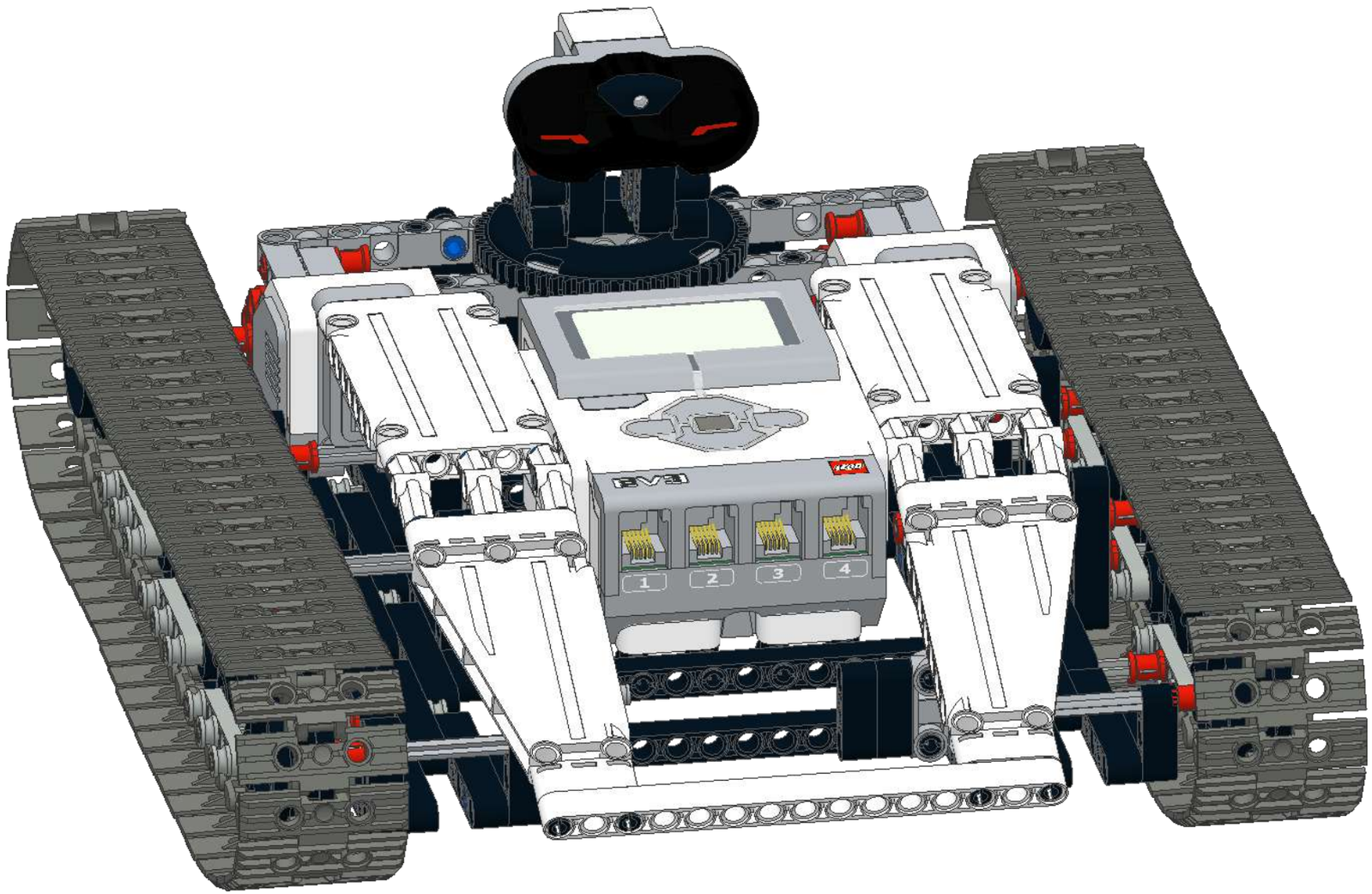

127

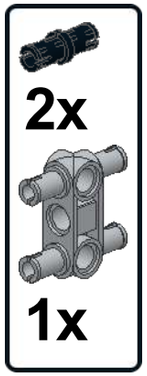

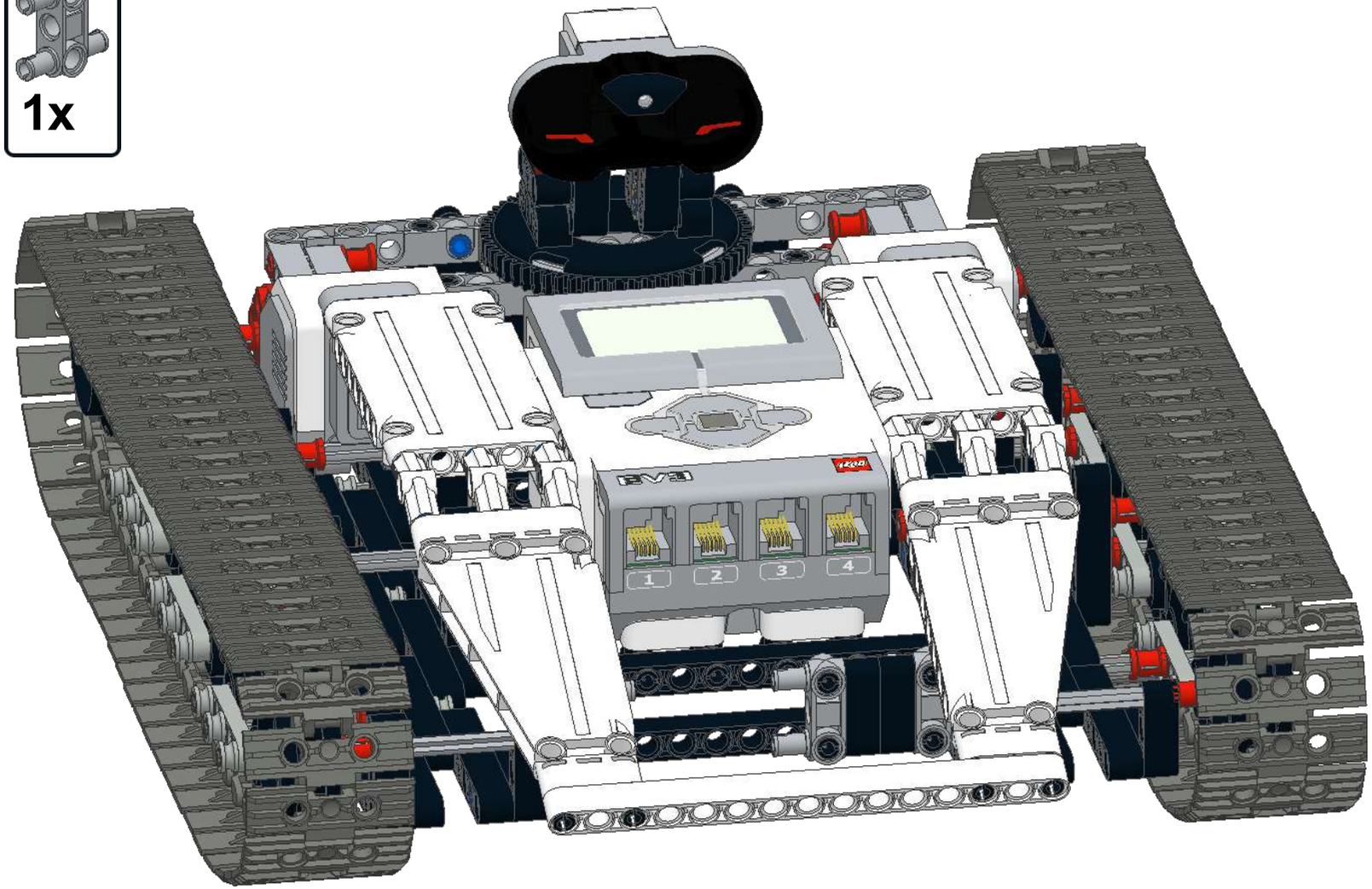

128

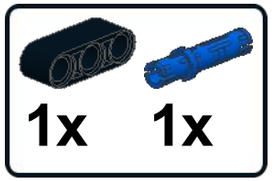

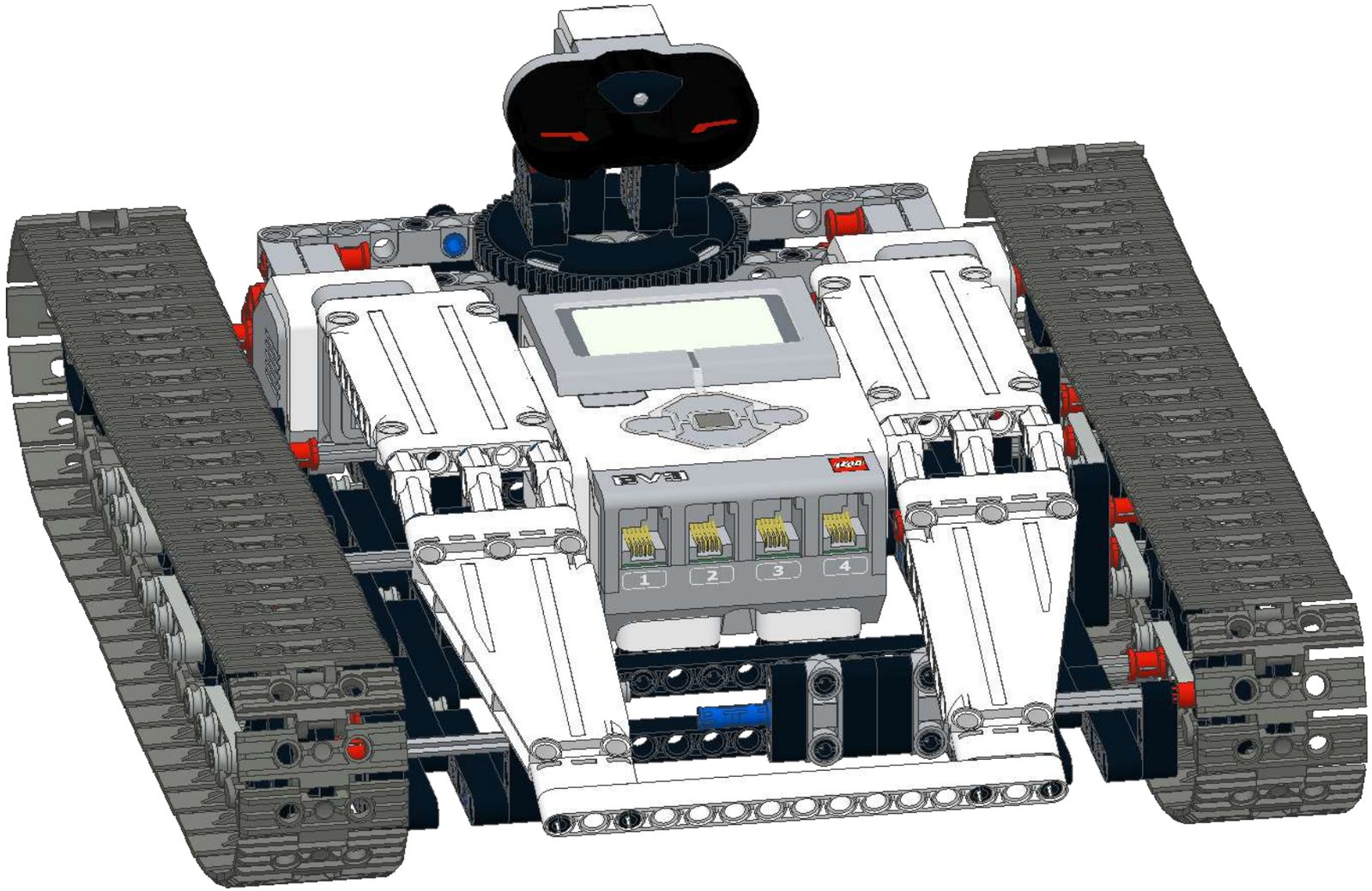

129

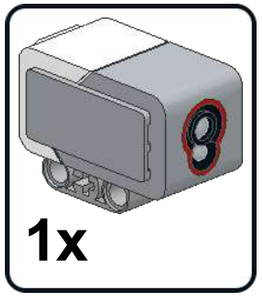

1x

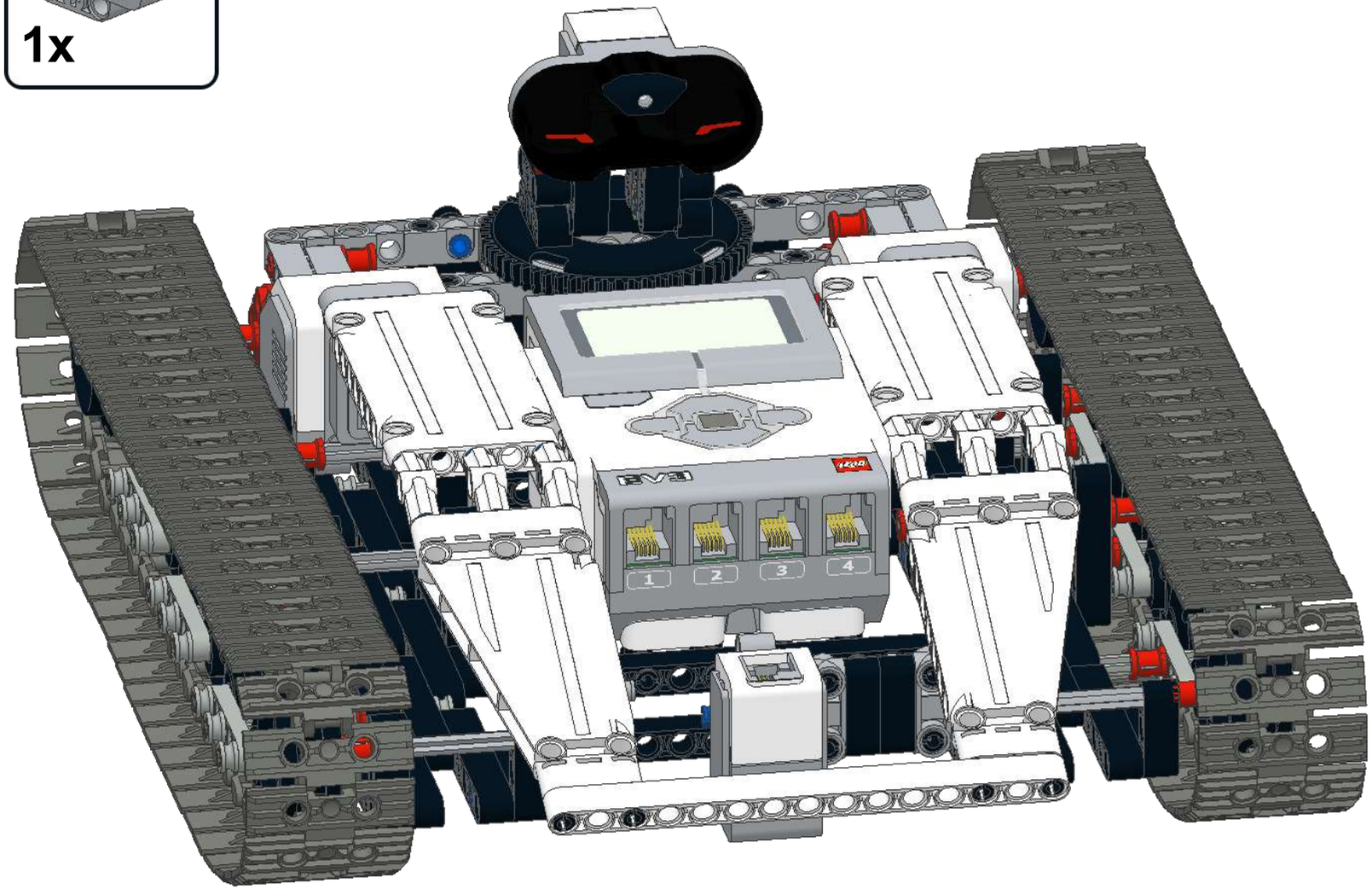

130

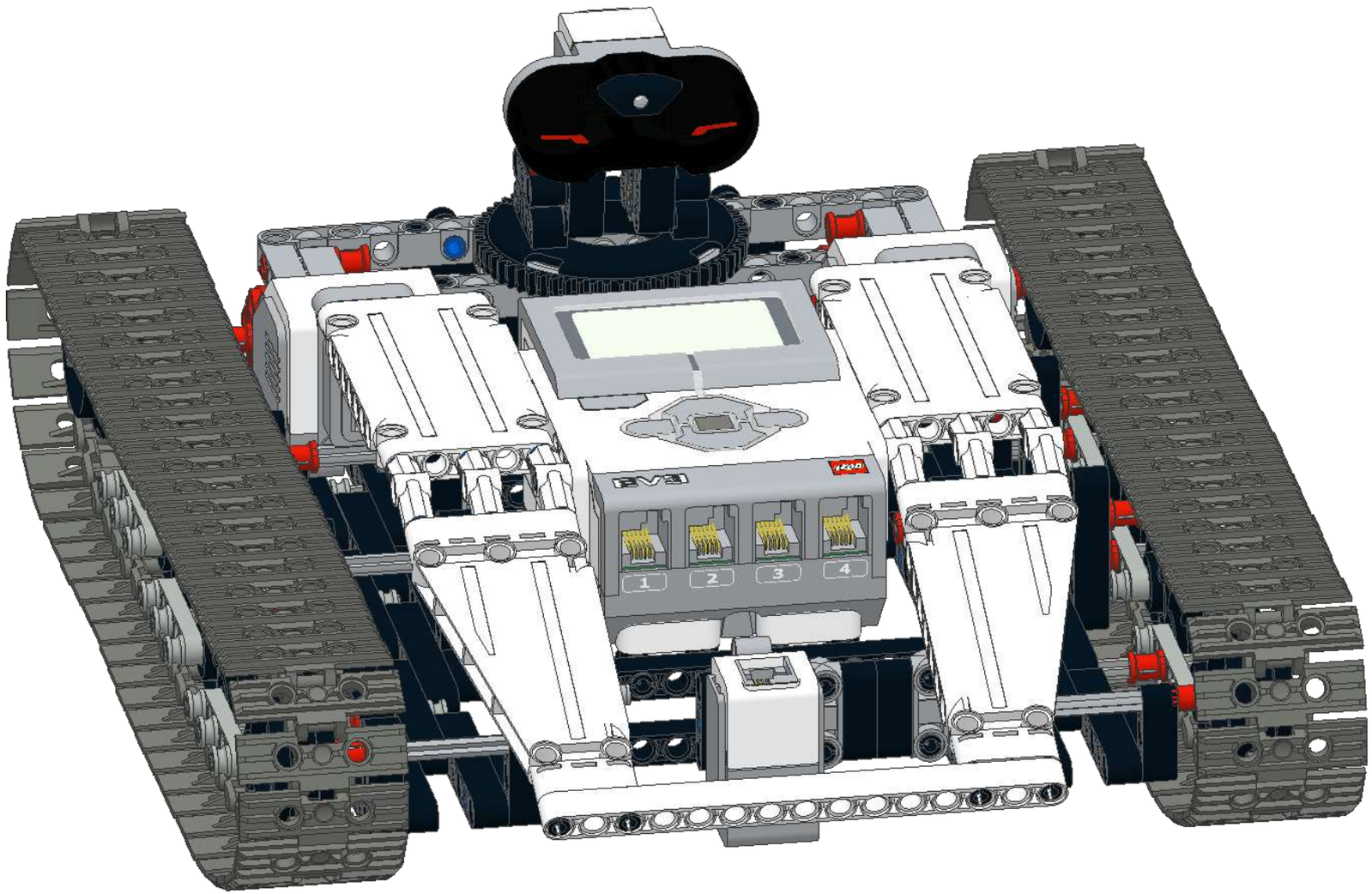

131

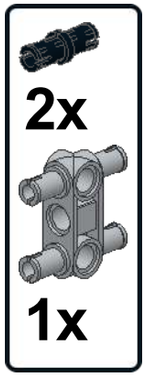

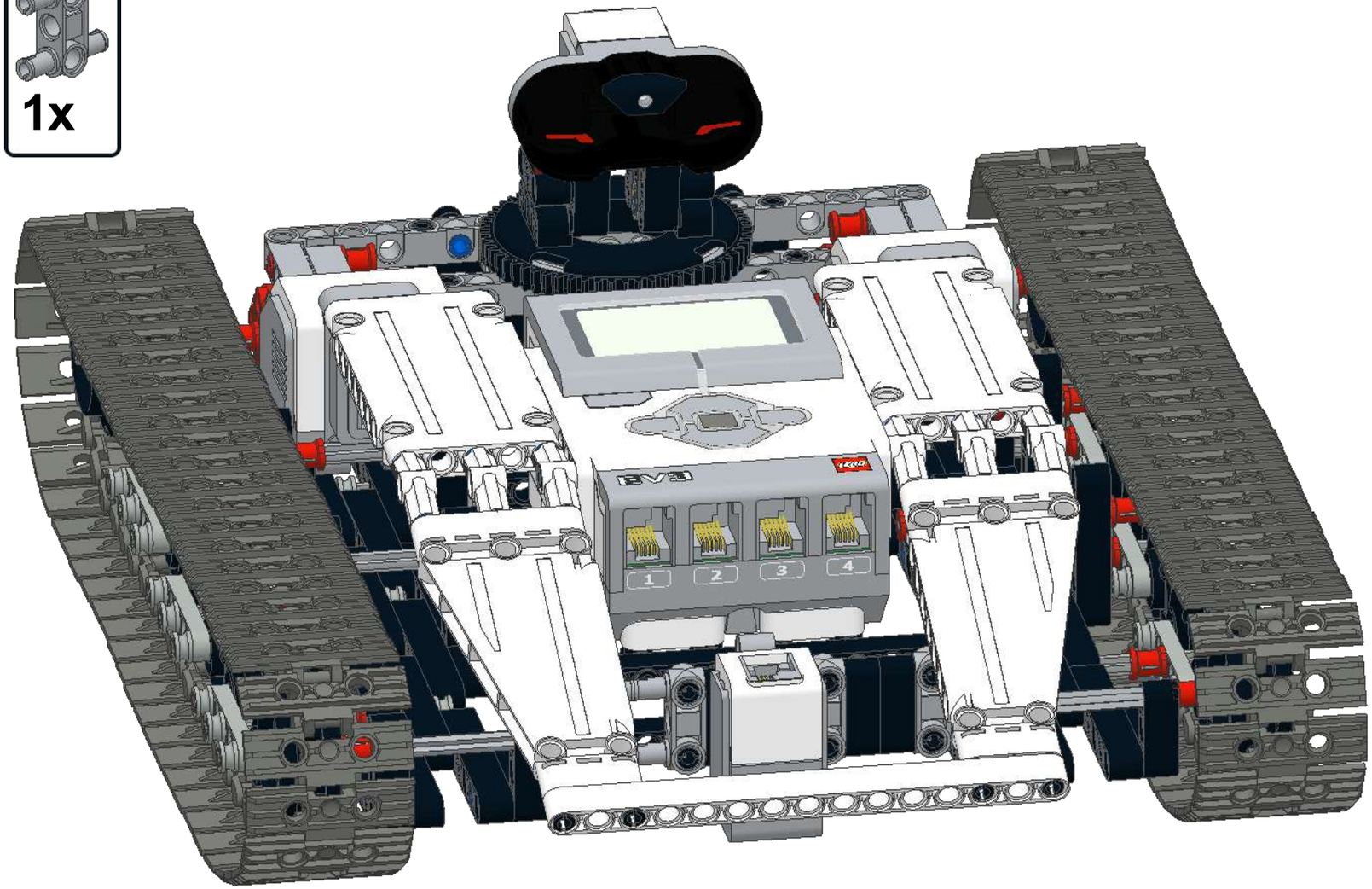

132

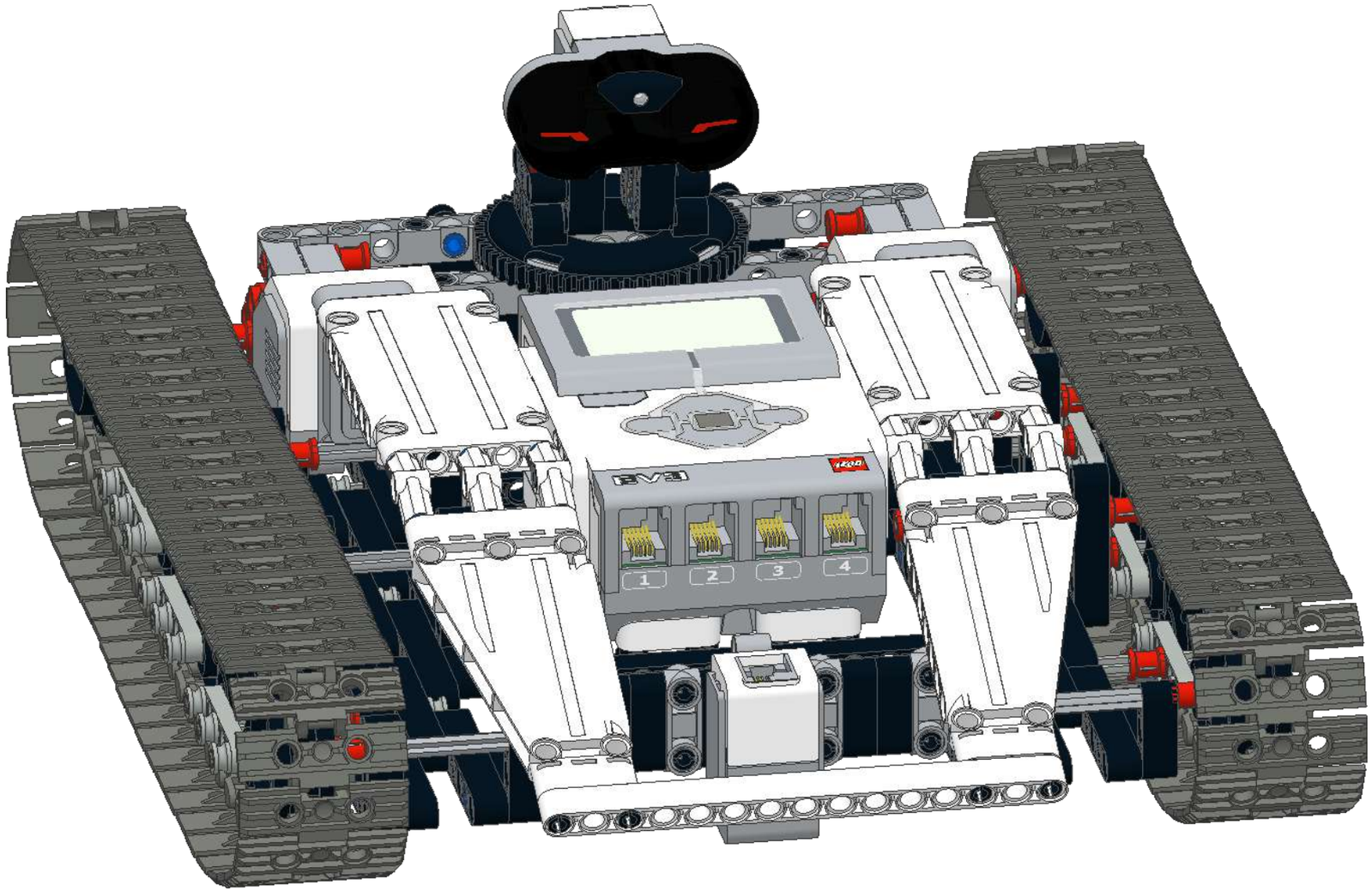

Copyright Smallrobots.it © 2017

LEGO® is a registered trademark of the LEGO Group, which does not sponsor, endorse, or authorize these instructions or the model they depict.