A Current Overview of Network Service Discovery Protocols

A list of the most prominent ones, along with a basic description and links for each

Done for Colton Idle, USA

By Fotios Basagiannis, Top Rated IT Consultant

Date: 16 August, 2024

List of currently available Network Service Discovery Protocols

1. **DNS-SD:** is not dependent on Multicast DNS (it works with unicast as well); DNS-SD and mDNS based "Service Discovery Protocols", like SSDP, are complementary technologies that can be used together.
    a. https://datatracker.ietf.org/doc/html/rfc6763
    b. https://www.ietf.org/rfc/rfc6763.txt
    c. http://www.dns-sd.org/

2. **SSDP:** uses UPnP Style UDP Multicast. HTTP on top of UDP using multicast (known as HTTPMU or HTTP over Multicast UDP) is part of SSDP.
    a. https://openconnectivity.org/upnp-specs/UPnP-arch-DeviceArchitecture-v2.0-20200417.pdf

Figure 1-1: — Discovery architecture

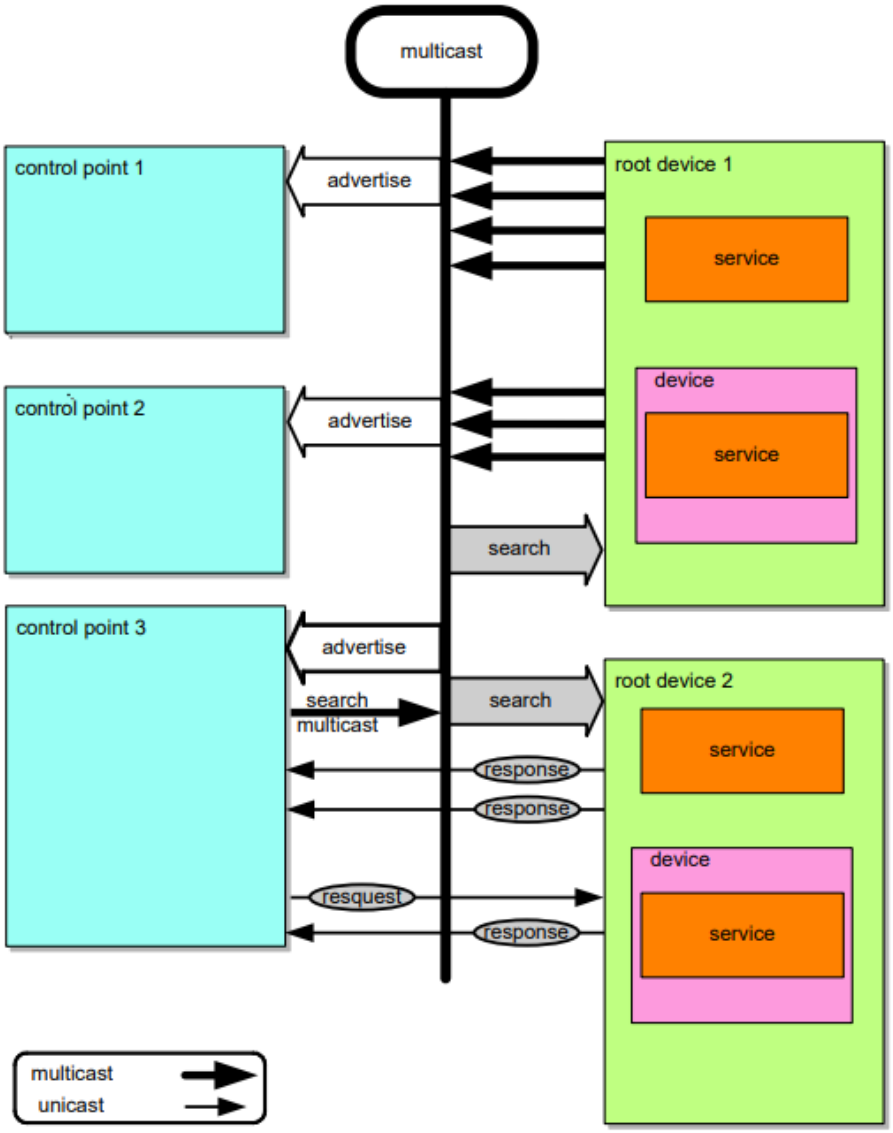

3. **Web Services Discovery (WSD)**
    a. https://docs.oasis-open.org/ws-dd/ns/discovery/2009/01

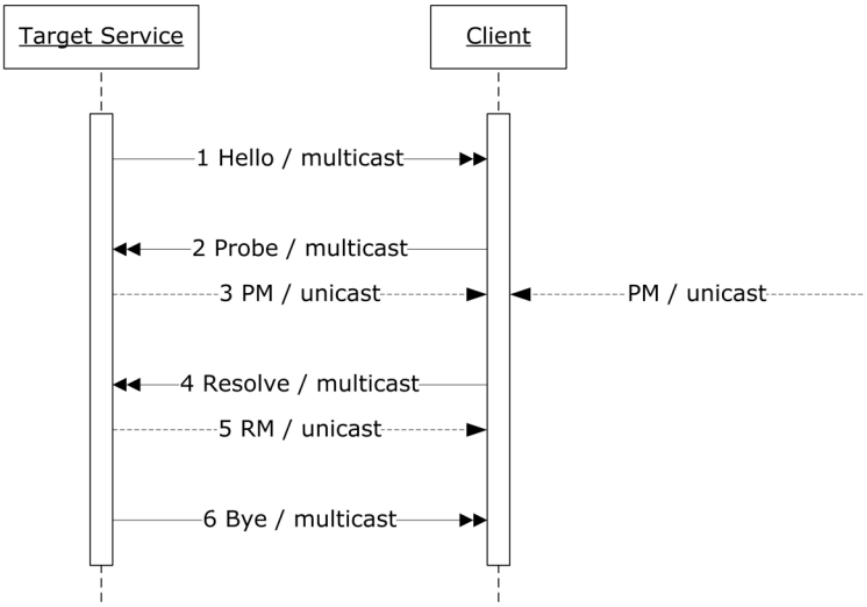

Figure 1 : Message Exchanges in an ad hoc mode.

4. **DLNA (Digital Living Network Alliance)**
    a. https://web.archive.org/web/20110630143952/http://www.dlna.org/about_us/about/DLNA_Whitepaper.pdf
5. **OCF's AllJoyn:**
    a. https://web.archive.org/web/20160311113210/https://allseenalliance.org/framework/documentation/supported-platforms
    b. GitHub: https://github.com/alljoyn/alljoyn.github.com/wiki

6. **OCF's IoTivity**
    a. https://iotivity.org/

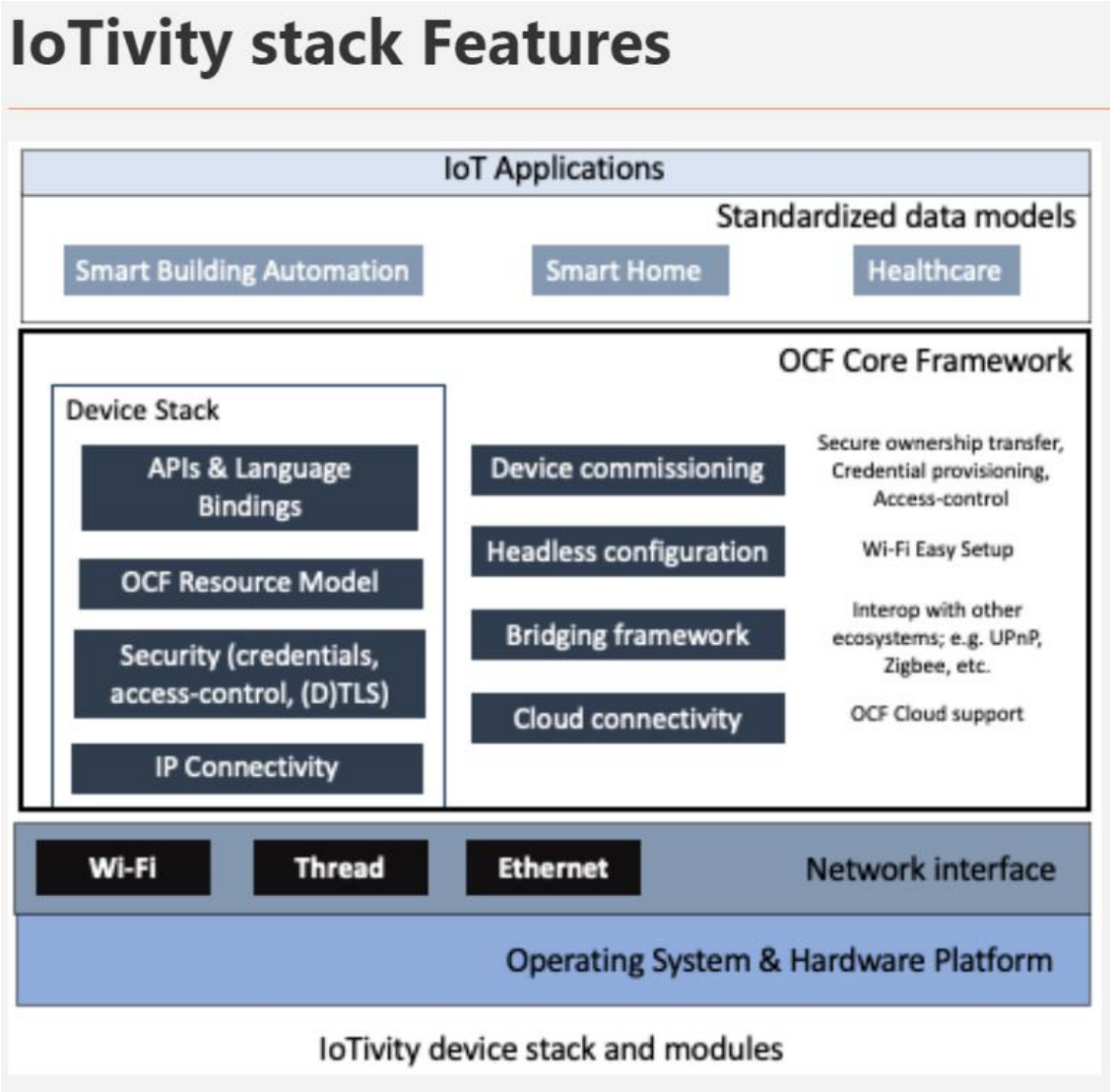

7. OCF's CoAP
    a. https://datatracker.ietf.org/doc/html/rfc7252

8. DIAL: Normally used for video casting, by OTT devices like ChromeCast, to discover compatible devices in the LAN.
    a. https://drive.google.com/file/d/18bTHirhVqfUb2O-Ob8dofC_s3Ul4H34a/view

5 DIAL Service Discovery

The DIAL Service Discovery protocol is based on SSDP (Simple Service Discovery Protocol) version 1.1 as defined in UPnP [1] and HTTP [2] and is illustrated in the following figure:

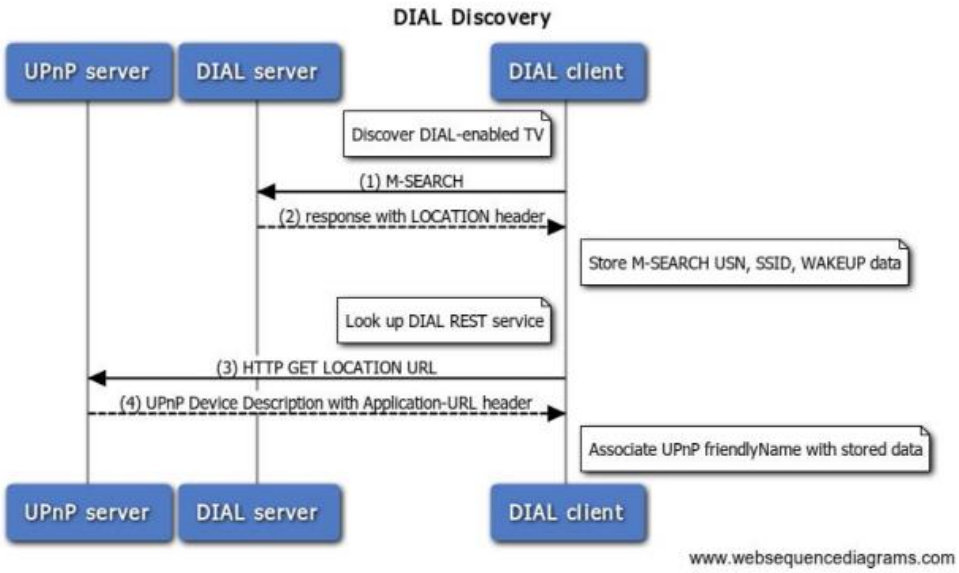

9. (Windows only but a minimum-implementation of it could be migrated to any platform) **NetBIOS Browsing** (with or without a Domain Master Browser)
    a. https://timothydevans.me.uk/nbf2cifs/nbf2cifs.pdf
10. (Not recommended) Older protocols like **Java's Jini** and the **IETF's Service Location Protocol (SLP)**

Notes

- mDNS is not a "Service Discovery Protocol" per se. It stands for "Multicast DNS and is used in complete "Service Discovery Protocols" like DIAL and DNS-SD.
- UDP broadcast/multicast is not a service discovery protocol. It is an IP protocol stack capability used in such protocols as SSDP.
- UDP multicast requires Routers that support the IGMP multicast protocol
- Bonjour from Apple, uses mDNS and DNS Service Discovery