AD7190 Assembly Document

Comments:	Company: OPEN_TRUST_LAB		Variant: PRELIMINARY	Git Hash: c0f26a3
	Board Name: AD7190		Project Name: OPEN_WEIGHT	
Sheet Title: Top/Bottom View	File Name: Cellule_de_force_V2.kicad_pcb	Designer: SIEBERT DIMITRY	Date: 2024-04-13	Revision: + (Unreleased)
Sheet Path:		Reviewer:	Size: A4	Sheet: 1 of 3

AD7190 Assembly Document

Top Assembly (Scale 1:1)

Components

Type	Front Side	Back Side	Total
THT	3	0	3
SMD	52	0	52
Total	55	0	55

ASSEMBLY NOTES (UNLESS OTHERWISE SPECIFIED)

1) DO NOT POPULATE PARTS ARE MARKED WITH A RED CROSS.

2) DO NOT POPULATE PARTS ARE NOT PRESENT IN THE BOM.

3) IF CONFLICTING INFORMATION IS FOUND BETWEEN THE ASSEMBLY FILE AND BOM, BOM SHOULD BE USED AS THE MAIN SOURCE.

4) CONFORMAL COATING IS NOT REQUIRED.

5) DOT IDENTIFIES PIN #1 LOCATION AND DEVICE ORIENTATION WHEN VIEWED FROM THE TOP.

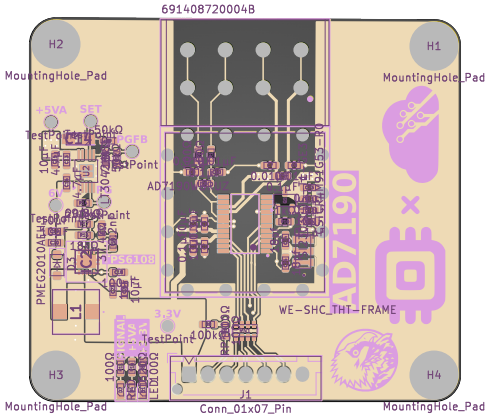

Comments:	Company: OPEN_TRUST_LAB		Variant: PRELIMINARY	Git Hash: c0f26a3
	Board Name: AD7190		Project Name: OPEN_WEIGHT	
Sheet Title: Top Assembly (Scale 1:1)	File Name: Cellule_de_force_V2.kicad_pcb	Designer: SIEBERT DIMITRY	Date: 2024-04-13	Revision: + (Unreleased)
Sheet Path:		Reviewer:	Size: A4	Sheet: 2 of 3

AD7190 Assembly Document

Bottom Assembly (Scale 1:1)

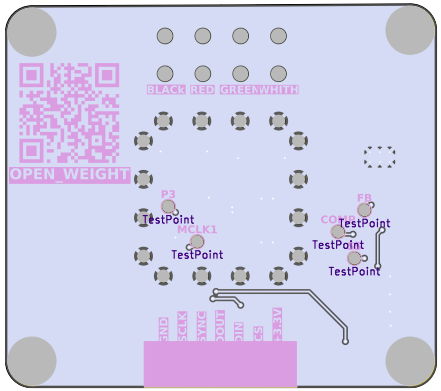

Comments:	Company: OPEN_TRUST_LAB		Variant: PRELIMINARY	Git Hash: c0f26a3
	Board Name: AD7190		Project Name: OPEN_WEIGHT	
Sheet Title: Bottom Assembly (Scale 1:1)	File Name: Cellule_de_force_V2.kicad_pcb	Designer: SIEBERT DIMITRY	Date: 2024-04-13	Revision: + (Unreleased)
Sheet Path:		Reviewer:	Size: A4	Sheet: 3 of 3