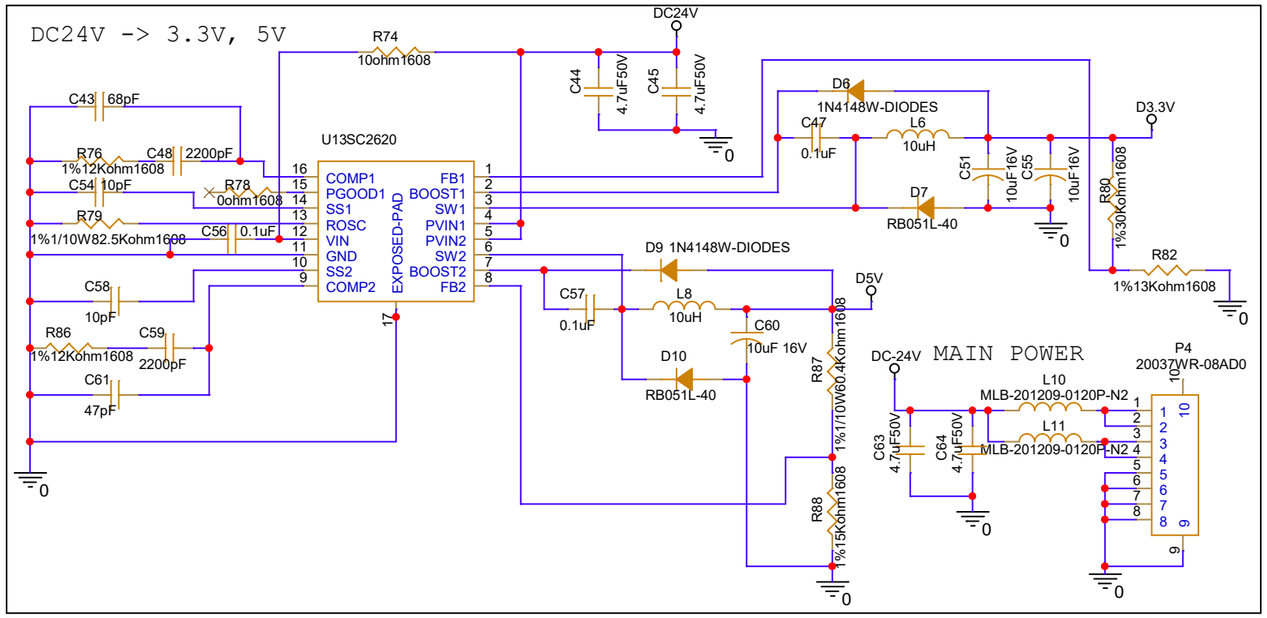

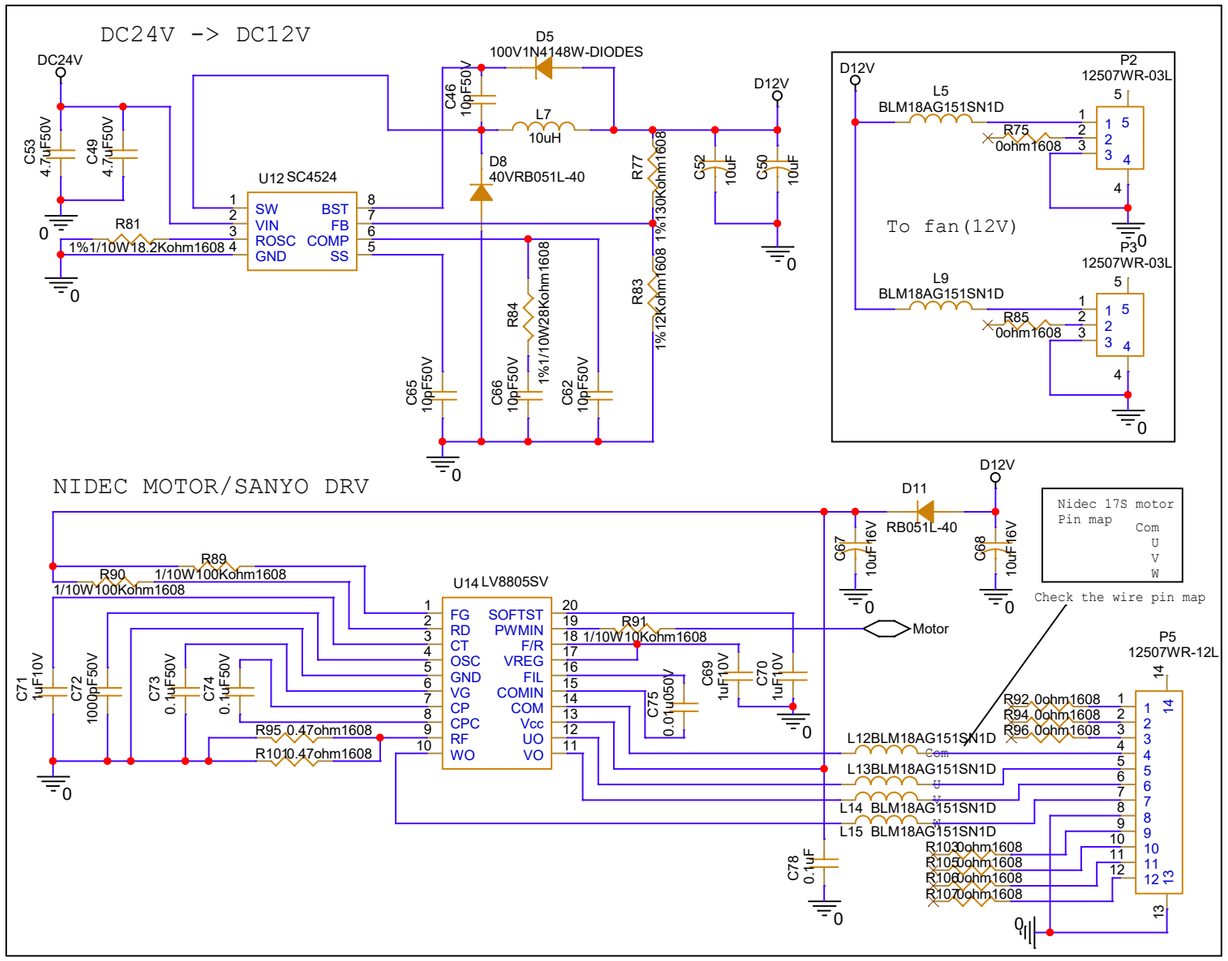

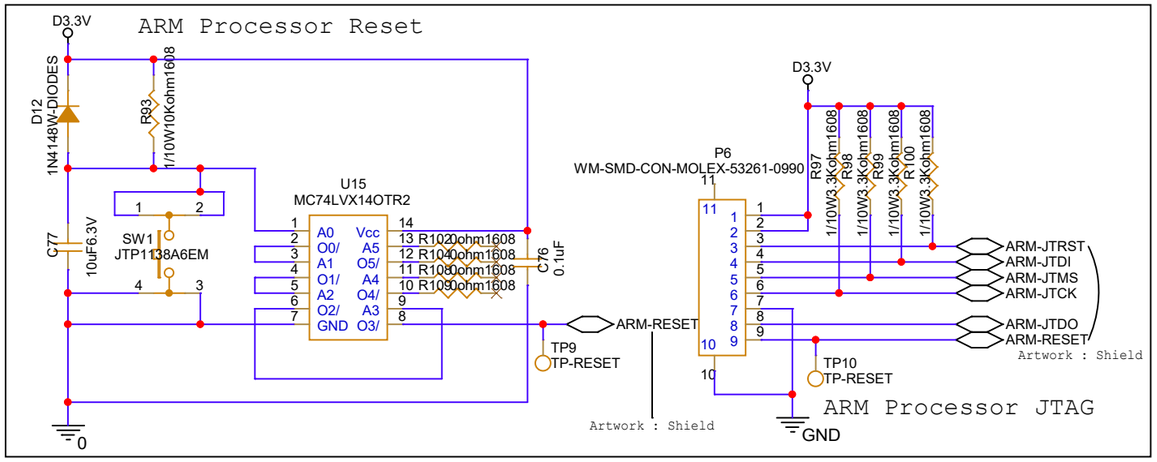

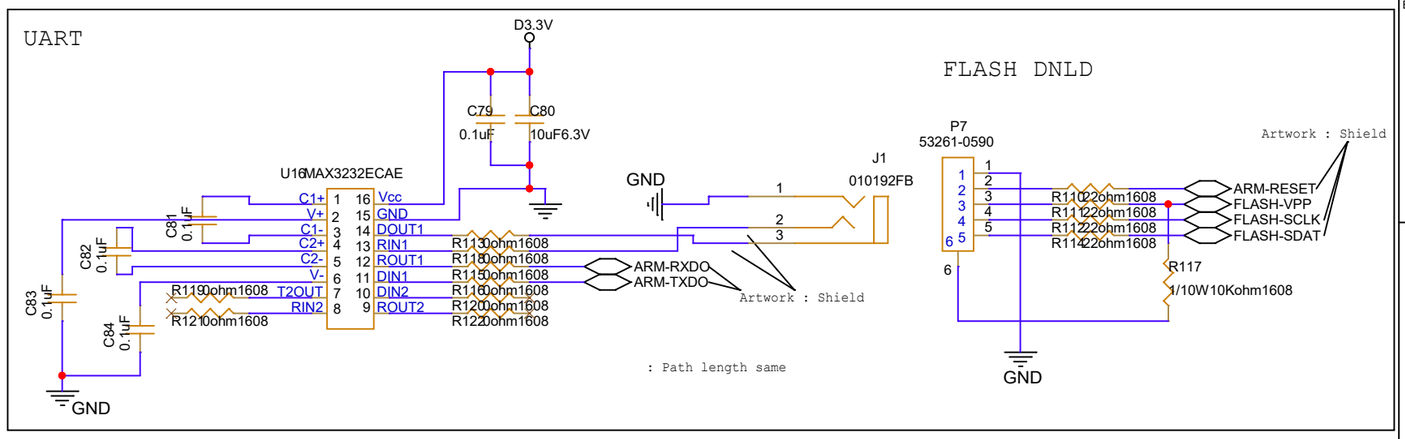

by 이정환		
Title <Title>	laser controller	
Size A3	Document Number <Doc> power module	Rev A0
Date: Monday, December 18, 2023	Sheet 2 of 3	