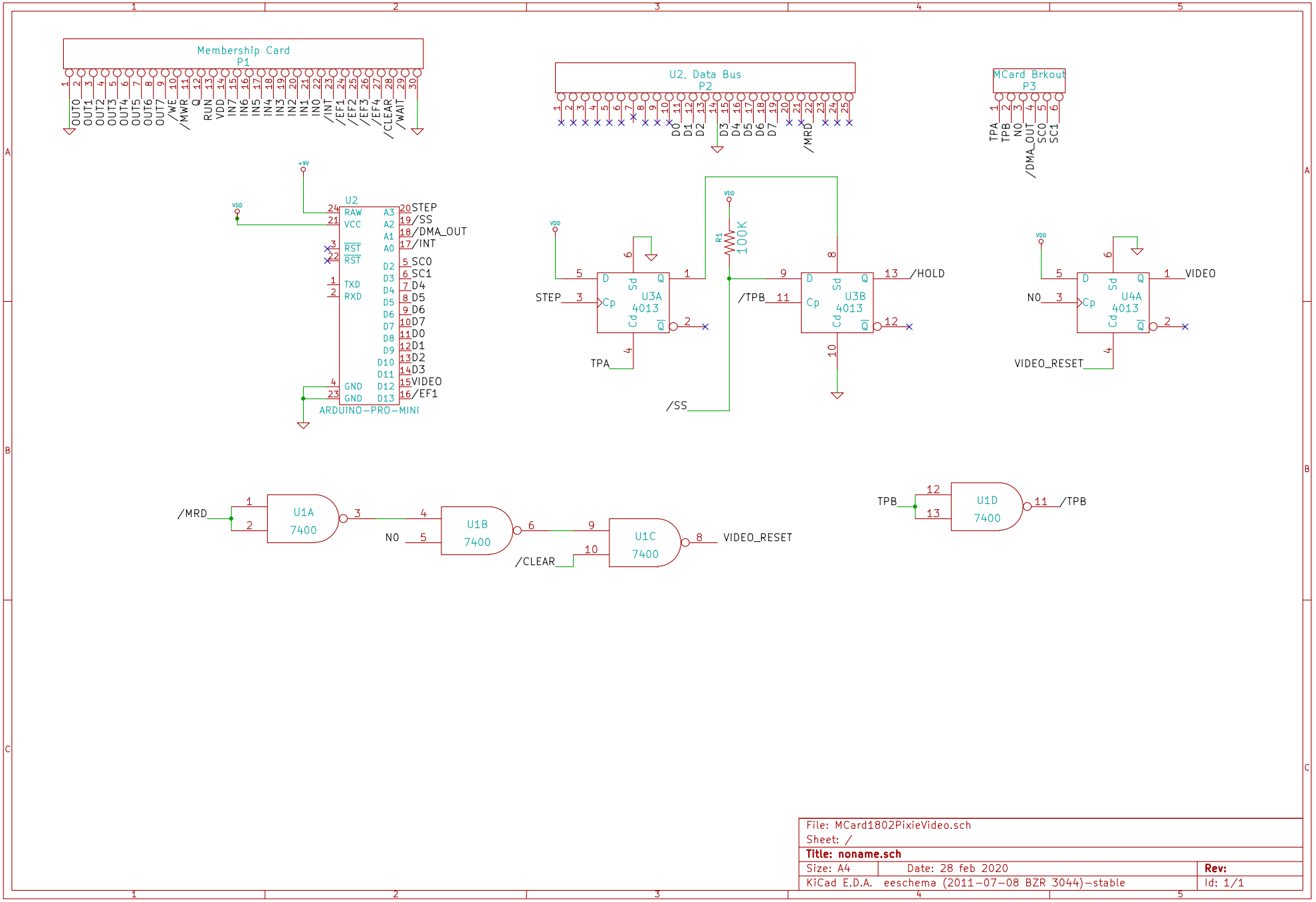

File: MCard1802PixieVideo.sch		
Sheet: /		
Title: noname.sch		
Size: A4	Date: 28 feb 2020	**Rev:**
KiCad E.D.A. eeschema (2011-07-08 BZR 3044)-stable		Id: 1/1