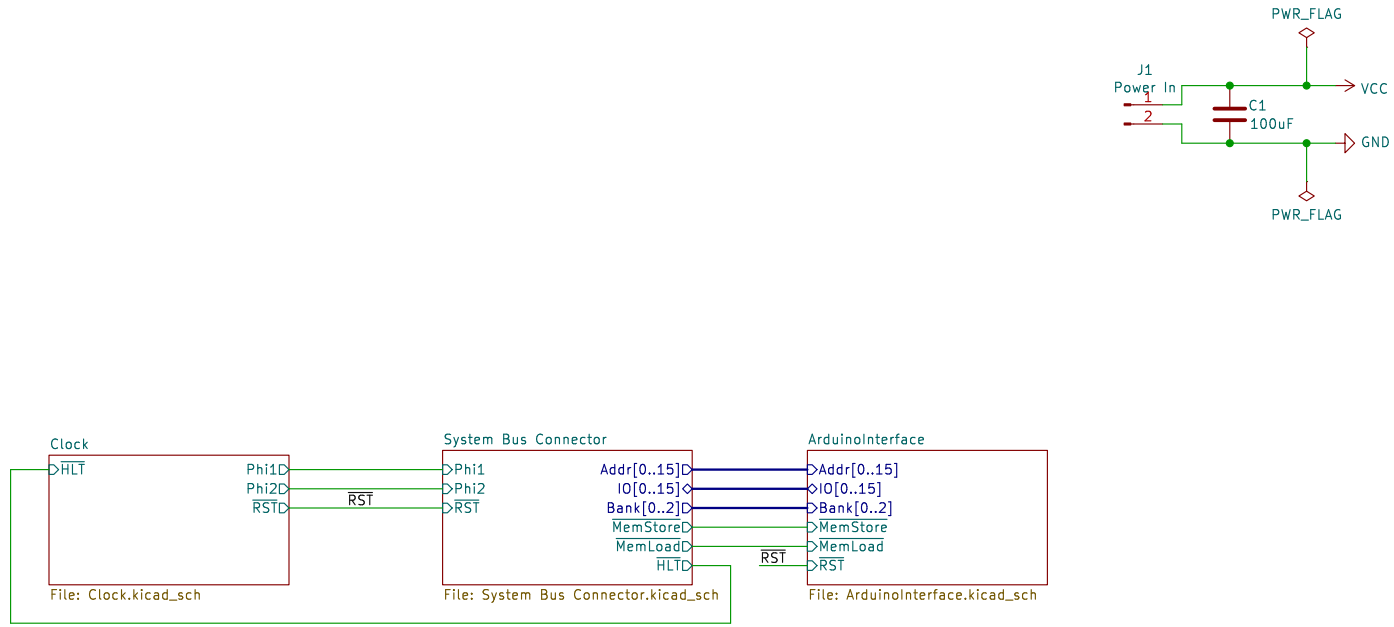

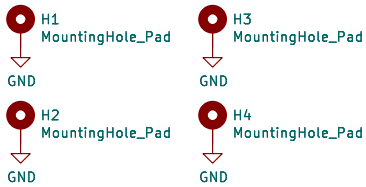

The processor and all peripherals connect to the main board.

Sheet: /
File: MainBoard.kicad_sch

Title: Turtle16: Main Board

Size: USLetter	Date: 2023-11-25	Rev: A
KiCad E.D.A. kicad 7.0.8		Id: 1/4

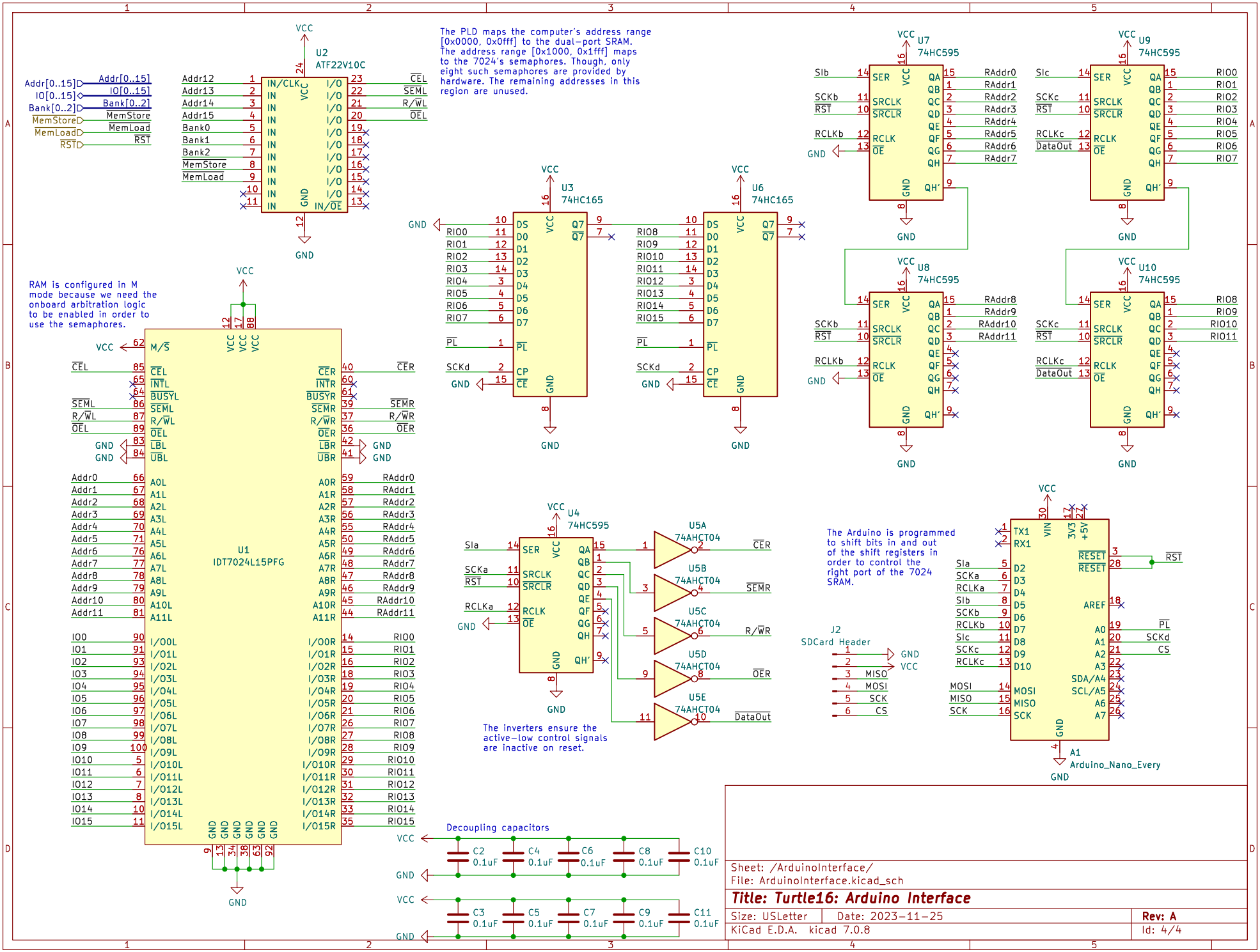
U2
ATF22V10C
The PLD maps the computer's address range [0x0000, 0x0fff] to the dual-port SRAM. The address range [0x1000, 0x1fff] maps to the 7024's semaphores. Though, only eight such semaphores are provided by hardware. The remaining addresses in this region are unused.
U3
74HC165
U6
74HC165
U7
74HC595
U8
74HC595
U9
74HC595
U10
74HC595
RAM is configured in M mode because we need the onboard arbitration logic to be enabled in order to use the semaphores.
U1
IDT7024L15PFG
U4
74HC595
U5A
74AHCT04
U5B
74AHCT04
U5C
74AHCT04
U5D
74AHCT04
U5E
74AHCT04
The inverters ensure the active-low control signals are inactive on reset.
The Arduino is programmed to shift bits in and out of the shift registers in order to control the right port of the 7024 SRAM.
J2
SDCard Header
A1
Arduino_Nano_Every
Decoupling capacitors
C2 0.1uF
C4 0.1uF
C6 0.1uF
C8 0.1uF
C10 0.1uF
C3 0.1uF
C5 0.1uF
C7 0.1uF
C9 0.1uF
C11 0.1uF
Sheet: /ArduinoInterface/
File: ArduinoInterface.kicad_sch
Title: Turtle16: Arduino Interface
Size: USLetter
Date: 2023-11-25
Rev: A
KiCad E.D.A. kicad 7.0.8
Id: 4/4

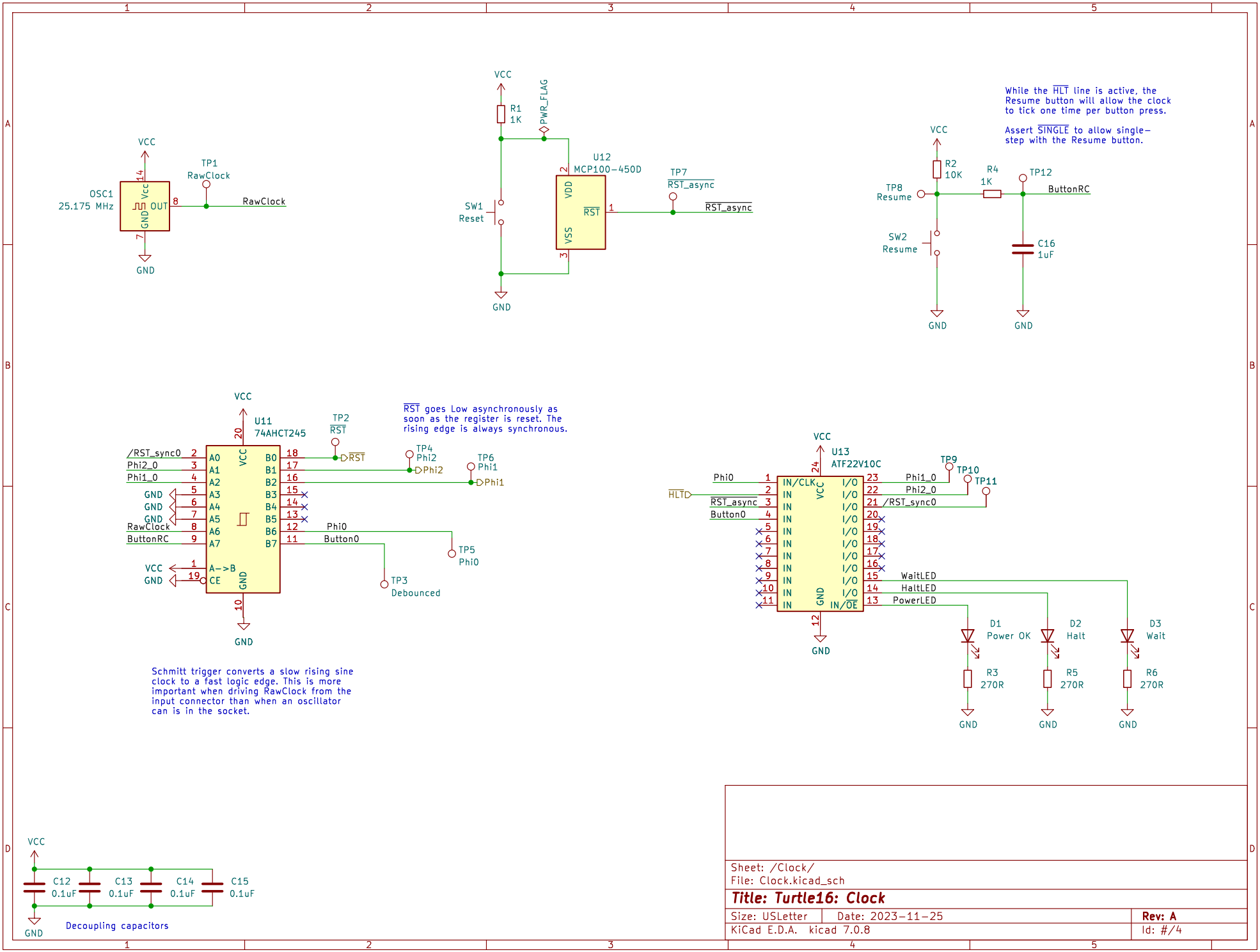

Sheet: /Clock/
File: Clock.kicad_sch

Title: Turtle16: Clock

Size: USLetter	Date: 2023-11-25	Rev: A
KiCad E.D.A. kicad 7.0.8		Id: #/4

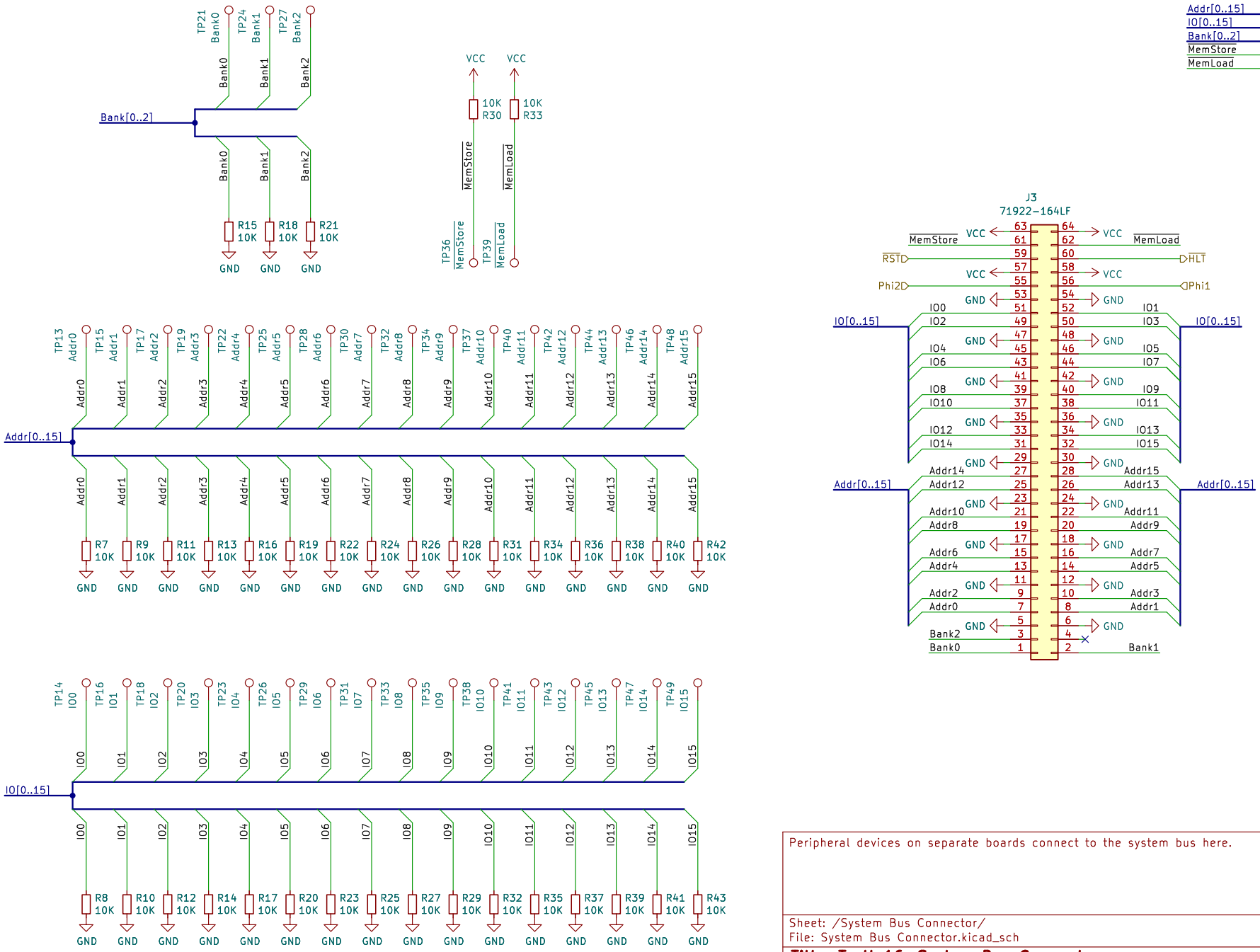

Peripheral devices on separate boards connect to the system bus here.

Sheet: /System Bus Connector/
File: System Bus Connector.kicad_sch

Title: Turtle16: System Bus Connector

Size: USLetter	Date: 2023-11-25	Rev: A
KiCad E.D.A. kicad 7.0.8		Id: #/4