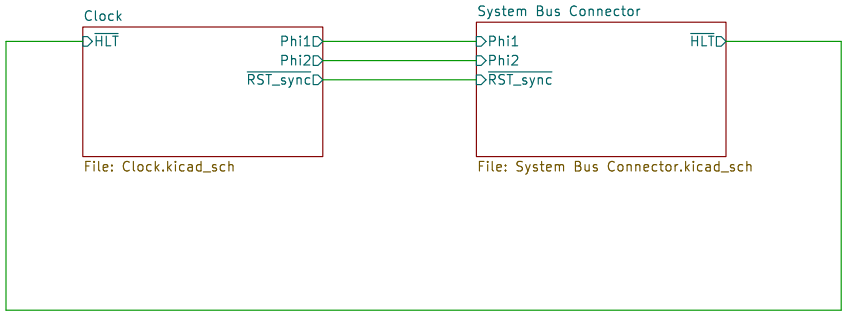

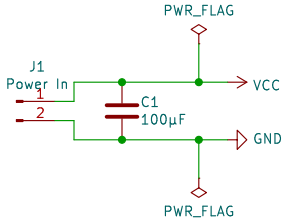

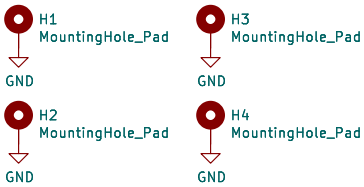

The processor and all peripherals connect to the main board.

Sheet: /
File: MainBoard.kicad_sch

Title: Turtle16: Main Board

Size: USLetter	Date: 2023-11-22	Rev: A
KiCad E.D.A. kicad 7.0.8		Id: 1/3

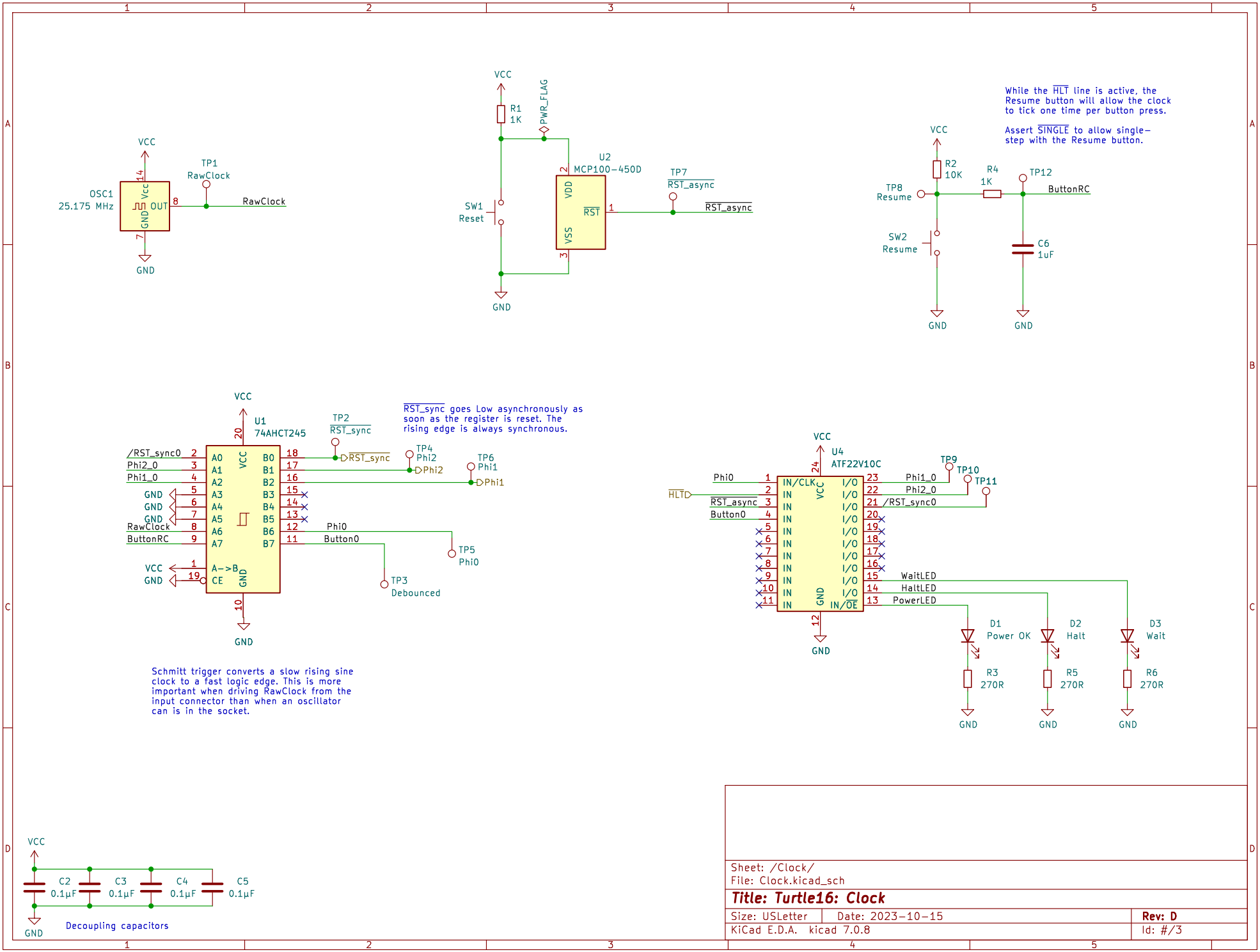

Sheet: /Clock/
File: Clock.kicad_sch

Title: Turtle16: Clock

Size: USLetter	Date: 2023-10-15	Rev: D
KiCad E.D.A. kicad 7.0.8		Id: #/3

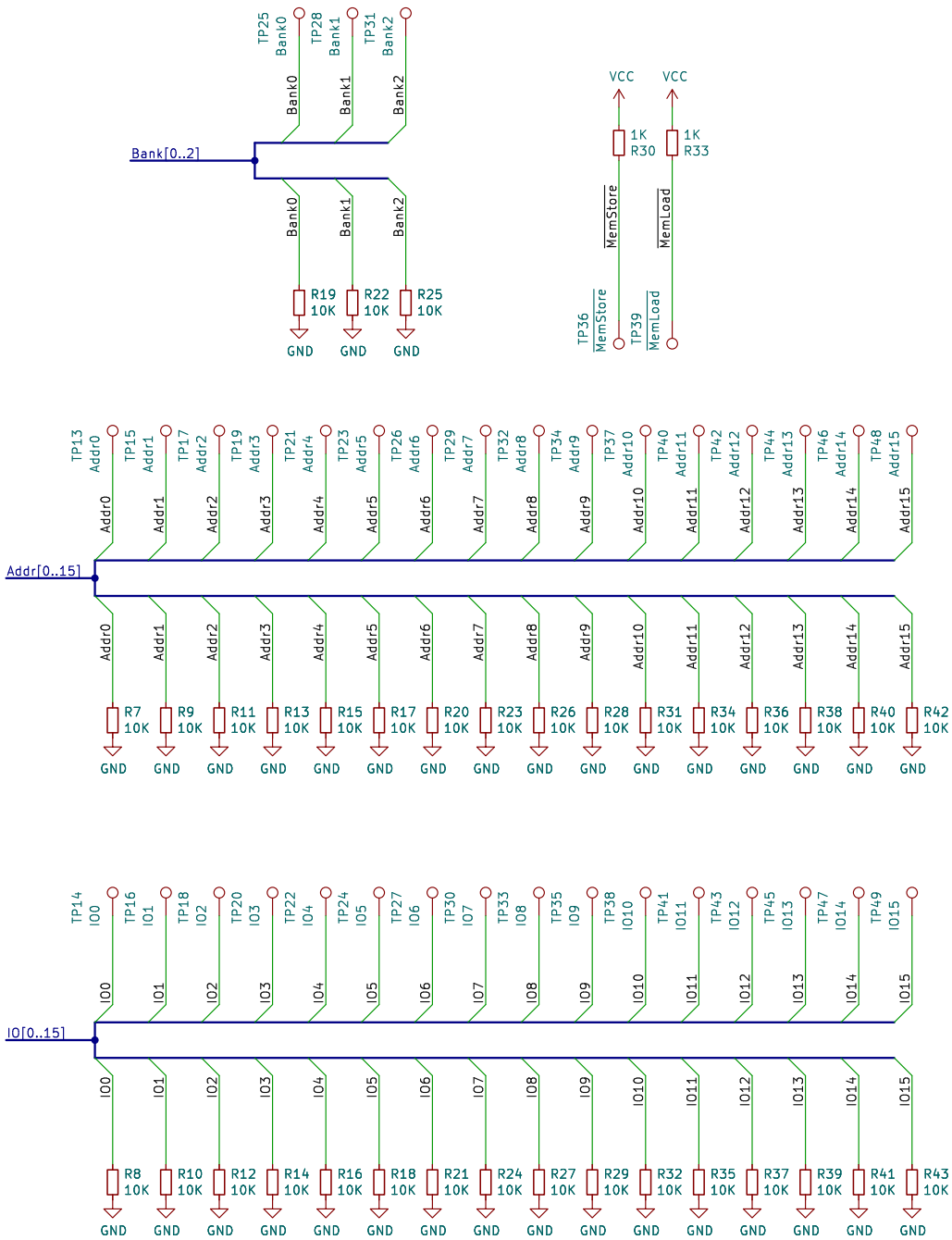

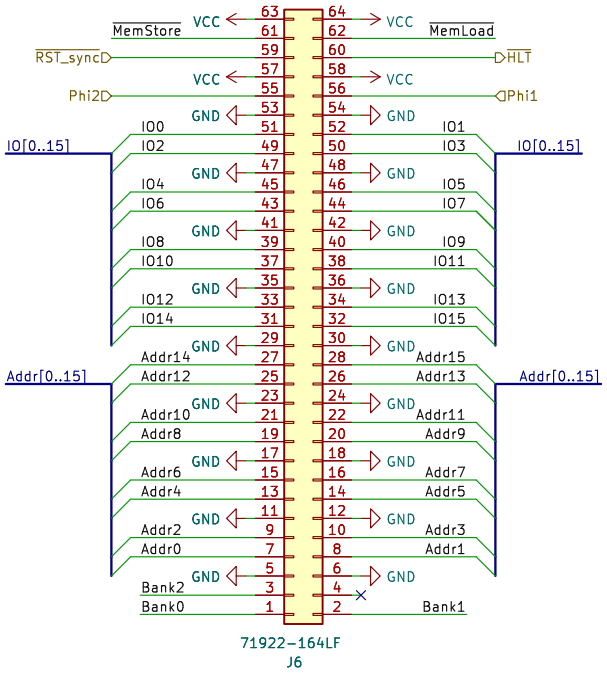

Peripheral devices on separate boards connect to the system bus here.

Sheet: /System Bus Connector/
File: System Bus Connector.kicad_sch

Title: System Bus Connector

Size: USLetter	Date: 2023-11-22	Rev: A
KiCad E.D.A. kicad 7.0.8		Id: #/3