Magnetic Field of a Straight Wire

Consider a thin, straight wire of finite length carrying a constant current I and placed along the x axis as shown in Figure. Determine the magnitude and direction of the magnetic field at point P due to this current.

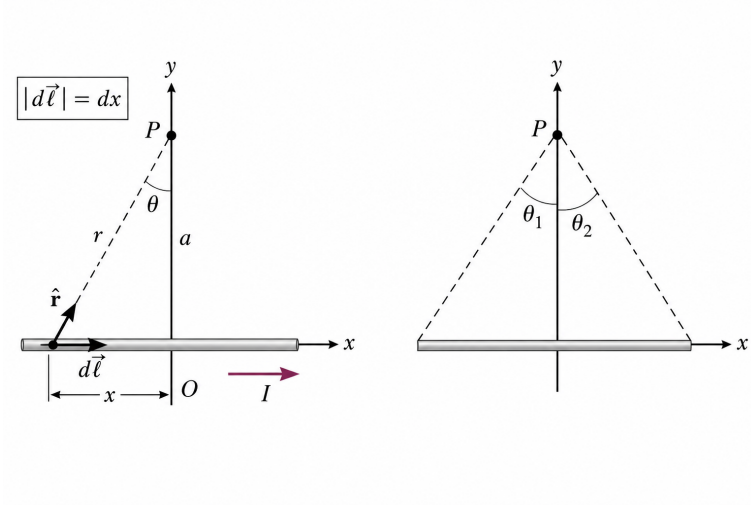

Figure 1: Magnetic field geometry for a finite straight wire

In class, we solved this problem directly using x as the integration variable, which follows naturally from the geometry of the wire.

Here, we show two alternative approaches that use different variables. The first method is using the angle θ, which simplifies the geometry through trigonometry.

In this second method, we instead use the distance r from the current element to the observation point as our integration variable. This approach keeps everything in terms of distances and avoids introducing angles, but it leads to a slightly more involved algebraic integral.

The goal is to demonstrate that the final result does not depend on the choice of variable. Different parameterizations may change the complexity of the steps, but the physics remains the same.

1 Method 1: x-parameterization

This was covered in class and is not repeated here.

2 Method 2: Angular Parameterization (θ)

Again we start by writing the differential form of the Biot-Savart law,

$$d\vec{B} = \frac{\mu_0 I}{4\pi} \frac{d\vec{\ell} \times \hat{r}}{r^2} \tag{1}$$

First, we work out the cross product,

$$d\vec{\ell} \times \hat{r} = |d\vec{\ell} \times \hat{r}|\, \hat{z} = dx\, \sin\left(\frac{\pi}{2} - \theta\right) \hat{z} = dx\, \cos\theta\, \hat{z} \tag{2}$$

By the right-hand rule, all contributions point in the $\hat{z}$ direction, so only the magnitude needs to be integrated.

$$d\vec{B} = \frac{\mu_0 I}{4\pi} \frac{dx\, \cos\theta}{r^2}\, \hat{z} \tag{3}$$

Since we are picking θ as our variable, we need to express dx and r in terms of it,

$$\tan\theta = \frac{x}{a} \qquad \Rightarrow \qquad x = a\tan\theta \qquad \Rightarrow \qquad dx = \frac{a}{\cos^2\theta}\, d\theta \tag{4}$$

$$\cos\theta = \frac{a}{r} \qquad \Rightarrow \qquad r = \frac{a}{\cos\theta} \tag{5}$$

Using Eqs.(4) and (5) in Eq.(3) we get

$$d\vec{B} = \frac{\mu_0 I}{4\pi} \frac{a\, d\theta}{\cos^2\theta} \frac{\cos\theta}{a^2} \cos^2\theta\, \hat{z} \tag{6}$$

Now we can take the integral,

$$\vec{B} = \frac{\mu_0 I}{4\pi a} \int_{\theta_1}^{\theta_2} d\theta\, \cos\theta \hat{z} = \frac{\mu_0 I}{4\pi a} \left(\sin\theta_2 - \sin\theta_1\right) \hat{z} \tag{7}$$

Writing $\sin\theta_2$ and $\sin\theta_1$ in terms of L

$$\sin\theta_2 = \frac{L/2}{\sqrt{L^2/4 + a^2}} \qquad \sin\theta_1 = -\frac{L/2}{\sqrt{L^2/4 + a^2}} \tag{8}$$

$$\vec{B} = \frac{\mu_0 I}{4\pi a} \left(\frac{L/2}{\sqrt{L^2/4 + a^2}} - \frac{-L/2}{\sqrt{L^2/4 + a^2}} \right) \hat{z} = \frac{\mu_0 I}{4\pi a} \frac{L}{\sqrt{L^2/4 + a^2}}\, \hat{z} \tag{9}$$

3 Method 3: Radial Parameterization (r)

$$d\vec{B} = \frac{\mu_0 I}{4\pi} \frac{dx \cos\theta}{r^2}\, \hat{z} \tag{10}$$

This time we are picking r as our variable. Therefore, we need to write $\cos\theta$ and dx in terms of r and dr

$$\cos\theta = \frac{a}{r} \tag{11}$$

$$r^2 = x^2 + a^2 \qquad \Rightarrow \qquad x = \sqrt{r^2 - a^2} \qquad \Rightarrow \qquad dx = \frac{r}{\sqrt{r^2 - a^2}}\, dr \tag{12}$$

Now substituting Eqs.(11) and (12) into Eq.(10) we get

$$d\vec{B} = \frac{\mu_0 I}{4\pi}\frac{a}{r^3}\frac{r}{\sqrt{r^2-a^2}}\,dr\,\hat{z} = \frac{\mu_0 I}{4\pi}\frac{a}{r^2\sqrt{r^2-a^2}}\,dr\,\hat{z} \tag{13}$$

Now that we have an expression that depends only on r, we can go ahead and take the integral,

$$\vec{B} \quad = \quad \frac{\mu_0 I a}{2\pi}\int_a^{\sqrt{a^2+L^2/4}} \frac{dr}{r^2\sqrt{r^2-a^2}}\,\hat{z} \tag{14}$$

This integral is taken as follows.

We make the following substitution,

$$u = \sqrt{r^2-a^2} \quad \Rightarrow \quad u^2 = r^2 - a^2. \tag{15}$$

Then,

$$2u\,du = 2r\,dr \quad \Rightarrow \quad r\,dr = u\,du \quad \Rightarrow \quad dr = \frac{u}{r}\,du \tag{16}$$

Using Eqs. (15) and (16) in Eq. (14)

$$\int \frac{dr}{r^2\sqrt{r^2-a^2}} = \int \frac{1}{r^2 u}\left(\frac{u}{r}\,du\right) = \int \frac{du}{r^3} \tag{17}$$

$$r^2 = u^2 + a^2 \quad \Rightarrow \quad r^3 = (u^2+a^2)^{3/2} \tag{18}$$

$$\int \frac{du}{r^3} = \int \frac{du}{(u^2+a^2)^{3/2}} \tag{19}$$

Previously we worked out this integral (Please see the lecture notes called "Solving the x-integral") and obtained the following result

$$\int \frac{du}{(u^2+a^2)^{3/2}} = \frac{u}{a^2\sqrt{u^2+a^2}} \tag{20}$$

We back-substitute,

$$u = \sqrt{r^2-a^2}, \quad \sqrt{u^2+a^2} = r \tag{21}$$

$$\int \frac{dr}{r^2\sqrt{r^2-a^2}} = \frac{\sqrt{r^2-a^2}}{a^2 r} \tag{22}$$

Now we apply the limits

$$\vec{B} = \frac{\mu_0 I a}{2\pi}\left[\frac{\sqrt{r^2-a^2}}{a^2 r}\right]_a^{\sqrt{a^2+L^2/4}}\,\hat{z} \tag{23}$$

Upper limit is,

$$r = \sqrt{a^2 + \frac{L^2}{4}} \tag{24}$$

$$\sqrt{r^2 - a^2} = \sqrt{a^2 + \frac{L^2}{4} - a^2} = \frac{L}{2} \tag{25}$$

$$\frac{\sqrt{r^2 - a^2}}{a^2 r} = \frac{L/2}{a^2\sqrt{a^2 + L^2/4}} \tag{26}$$

The lower limit is

$$r = a \quad \Rightarrow \quad \sqrt{r^2 - a^2} = 0 \tag{27}$$

The final result becomes,

$$\vec{B} = \frac{\mu_0 I a}{2\pi} \cdot \frac{L/2}{a^2\sqrt{a^2 + L^2/4}}\,\hat{z} \tag{28}$$

4 Comparison of Methods

x-variable: most direct from geometry

θ-variable: simplifies algebra via trigonometry

r-variable: removes angles but introduces a nontrivial integral

All methods give

$$\boxed{\vec{B} = \frac{\mu_0 I L}{4\pi a\sqrt{a^2 + L^2/4}}\,\hat{z}}$$