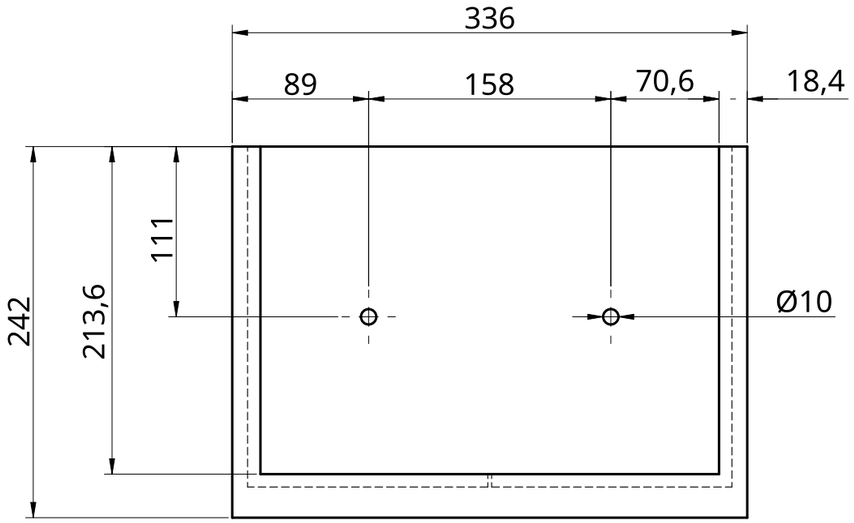

1:4

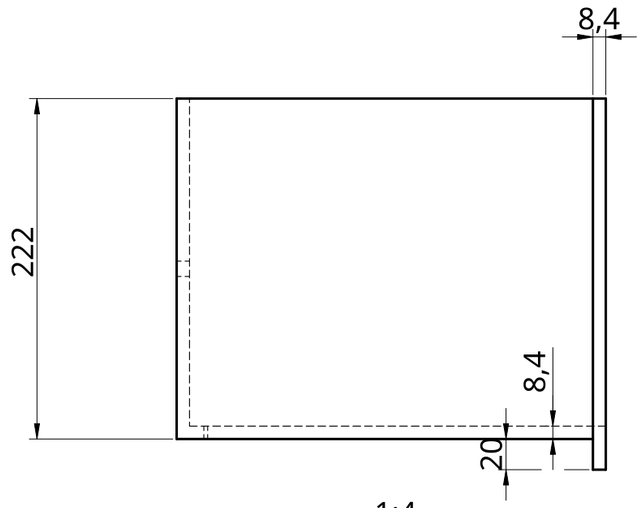

1:4

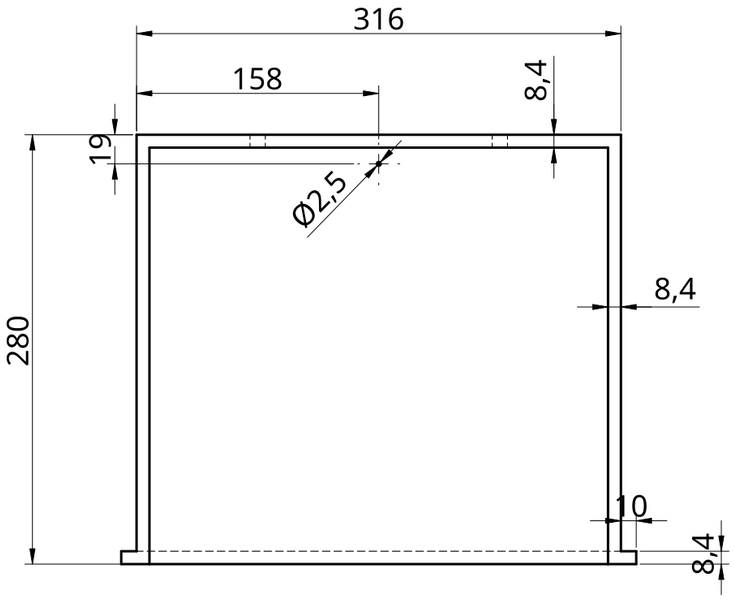

1:4

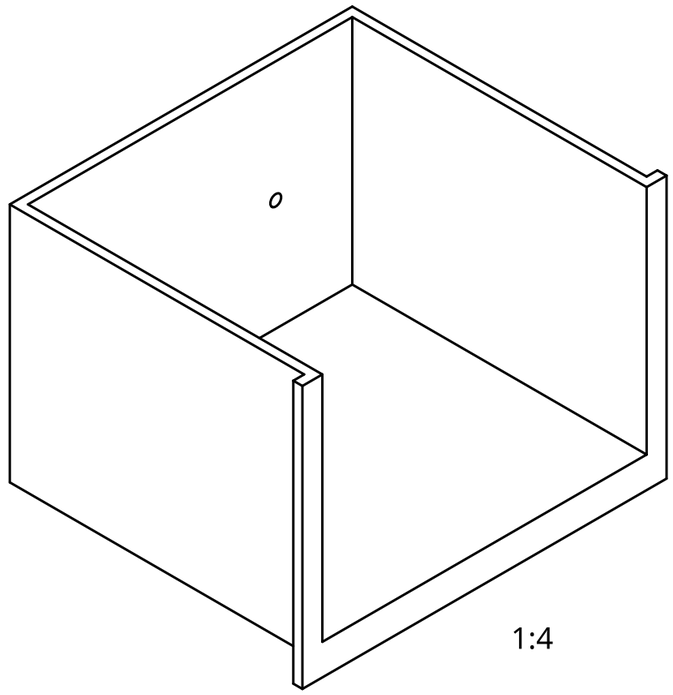

1:4

UNLESS OTHERWISE SPECIFIED, DIMENSIONS ARE IN MILLIMETERS		NAME	SIGNATURE	DATE
ANGULAR = ± °	DRAWN	MINHEE KIM		2022-12-02
SURFACE FINISH	CHECKED			
	APPROVED			
DO NOT SCALE DRAWING				
BREAK ALL SHARP EDGES AND REMOVE BURRS				
FIRST ANGLE PROJECTION	MATERIAL		FINISH	

TITLE

shelf 22, 27

SIZE A3	DWG NO.	REV.
SCALE 1:4	WEIGHT	SHEET 1 of 1