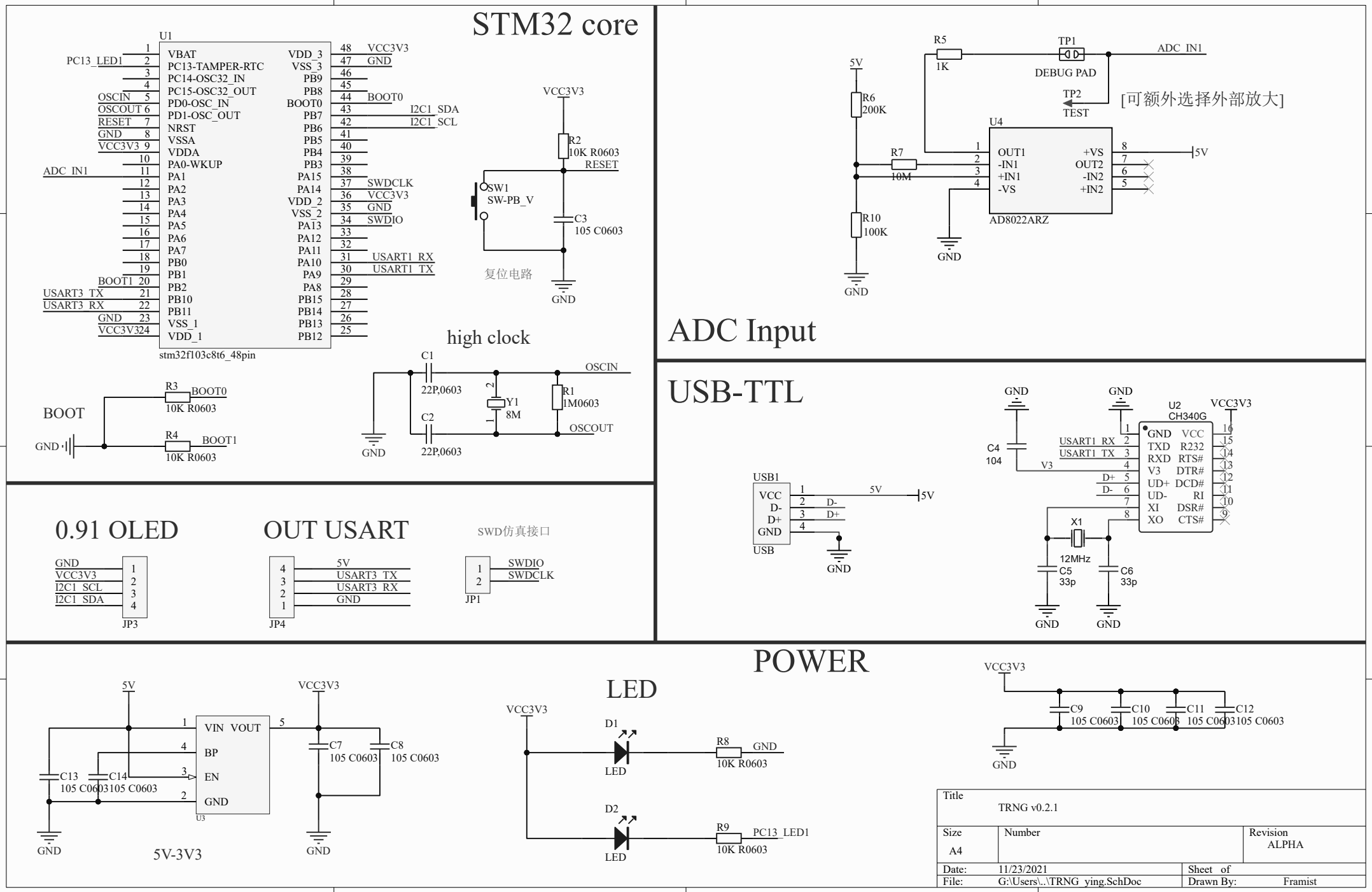
STM32 core
U1
VBAT
PC13-TAMPER-RTC
PC14-OSC32_IN
PC15-OSC32_OUT
PD0-OSC_IN
PD1-OSC_OUT
NRST
VSSA
VDDA
PA0-WKUP
PA1
PA2
PA3
PA4
PA5
PA6
PA7
PB0
PB1
PB2
PB10
PB11
VSS_1
VDD_1
VDD_3
VSS_3
PB9
PB8
BOOT0
PB7
PB6
PB5
PB4
PB3
PA15
PA14
VDD_2
VSS_2
PA13
PA12
PA11
PA10
PA9
PA8
PB15
PB14
PB13
PB12
PC13_LED1
OSCIN
OSCOUT
RESET
GND
VCC3V3
ADC_IN1
BOOT1
USART3_TX
USART3_RX
I2C1_SDA
I2C1_SCL
SWDCLK
SWDIO
USART1_RX
USART1_TX
stm32f103c8t6_48pin
VCC3V3
R2
10K R0603
RESET
SW1
SW-PB_V
C3
105 C0603
复位电路
GND
high clock
C1
22P,0603
C2
22P,0603
Y1
8M
R1
1M0603
OSCIN
OSCOUT
GND
BOOT
R3
BOOT0
10K R0603
R4
BOOT1
10K R0603
GND
ADC Input
R5
1K
TP1
DEBUG PAD
ADC_IN1
TP2
TEST
[可额外选择外部放大]
5V
R6
200K
R7
10M
R10
100K
U4
OUT1
-IN1
+IN1
-VS
+VS
OUT2
-IN2
+IN2
AD8022ARZ
GND
USB-TTL
USB1
VCC
D-
D+
GND
USB
5V
D-
D+
GND
U2
CH340G
VCC3V3
GND
C4
104
USART1_RX
USART1_TX
V3
D+
D-
GND
VCC
TXD
RXD
V3
UD+
UD-
XI
XO
R232
RTS#
DTR#
DCD#
RI
DSR#
CTS#
X1
12MHz
C5
33p
C6
33p
0.91 OLED
GND
VCC3V3
I2C1_SCL
I2C1_SDA
JP3
OUT USART
5V
USART3_TX
USART3_RX
GND
JP4
SWD仿真接口
SWDIO
SWDCLK
JP1
POWER
5V
VCC3V3
VIN
VOUT
BP
EN
GND
U3
C13
105 C0603
C14
105 C0603
C7
105 C0603
C8
105 C0603
GND
5V-3V3
LED
VCC3V3
D1
LED
R8
10K R0603
GND
D2
LED
R9
10K R0603
PC13_LED1
VCC3V3
C9
105 C0603
C10
105 C0603
C11
105 C0603
C12
105 C0603
GND
Title
TRNG v0.2.1
Size
A4
Number
Revision
ALPHA
Date:
11/23/2021
Sheet of
File:
G:\Users\..\TRNG_ying.SchDoc
Drawn By:
Framist