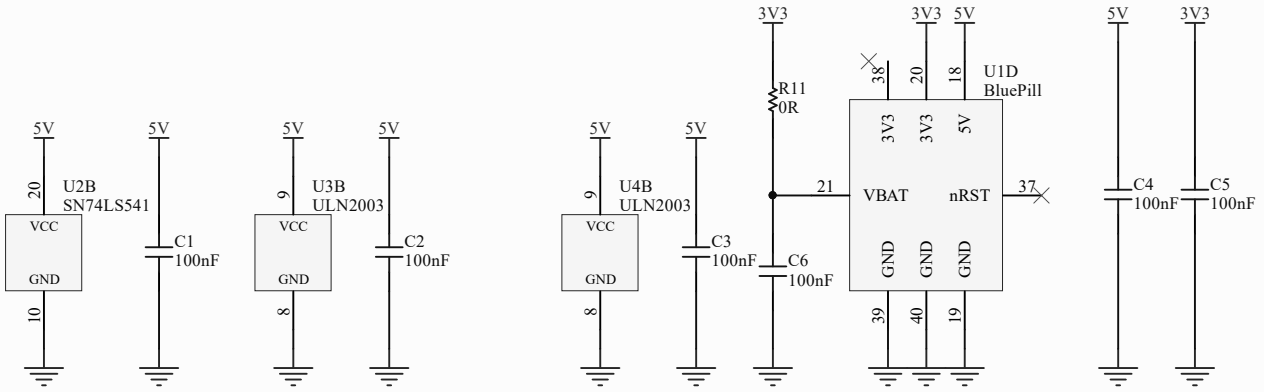

Title		
Size A4	Number	Revision
Date: 18/02/2021		Sheet of
File: C:\Users\..\Blue Pill - Power.SchDoc		Drawn By:

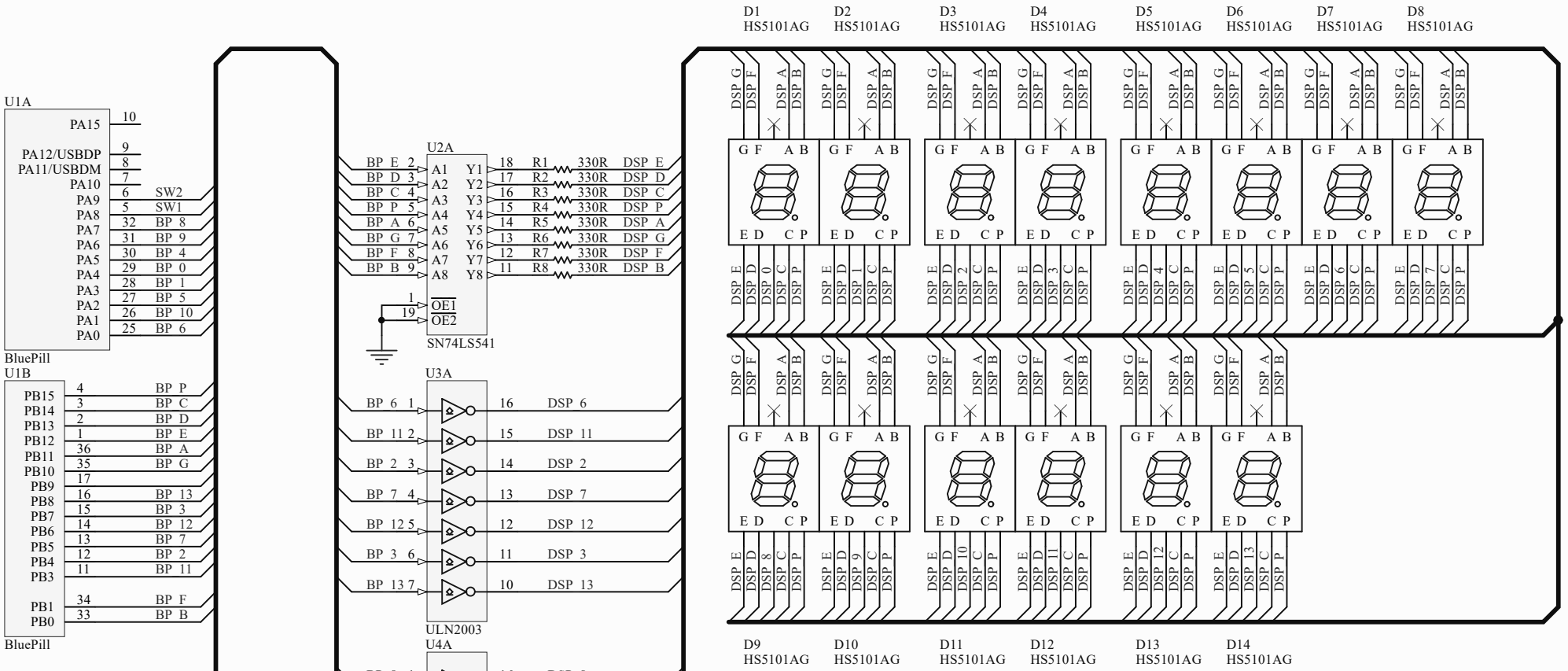

Title		
Size A4	Number	Revision
Date: 18/02/2021		Sheet of
File: C:\Users\..\Blue Pill Clock.SchDoc		Drawn By: