LA12X

owner's manual (EN)

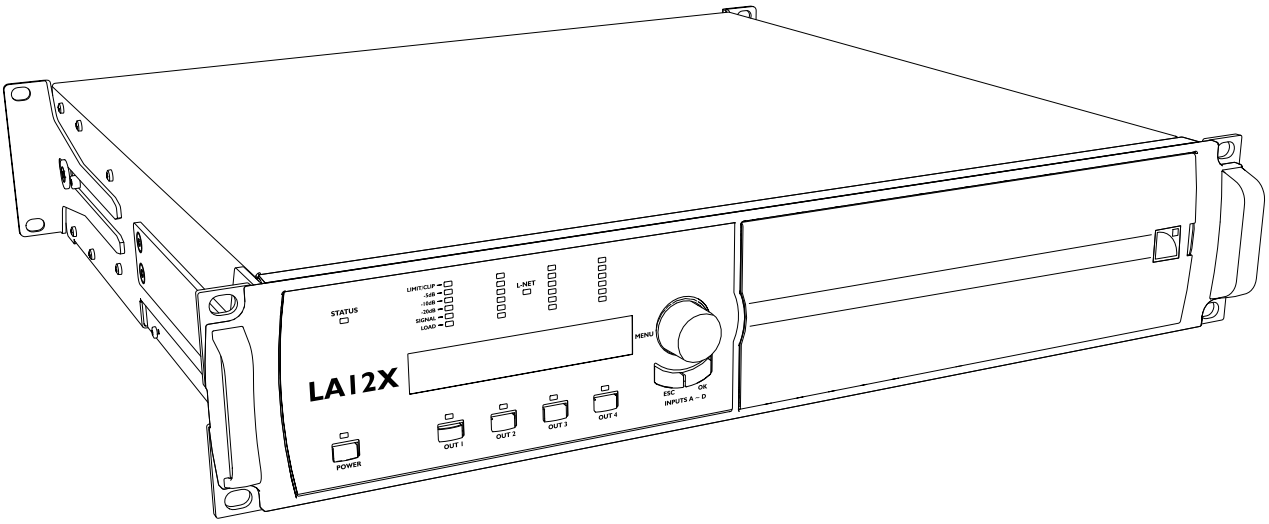

Document reference: LA12X owner's manual (EN) version 10.0
Distribution date: April 18, 2023
© 2023 L-Acoustics. All rights reserved.
No part of this publication may be reproduced or transmitted in any form or by any means without the express written consent of the publisher.

Contents

Safety....6
Important safety instructions....6
Additional important safety instructions....7
Introduction....9
LA12X amplified controller....9
How to use this manual....9
Revision history....10
System components....11
Technical description....13
Main features....13
Internal components....13
Front and rear panels....13
Signal processing and amplification....14
Signal inputs....14
DSP architecture....15
Power supply and amplifier section....16
Speaker outputs....16
Speaker protection....16
Monitoring and control....16
User interface....16
L-NET remote control network....16
Inspection and preventive maintenance....17
How to do preventive maintenance....17
CHK - External structure....17
CHK - Cleanness....18
CHK - Normal start-up sequence....18
CHK - Network functionalities and firmware....18
Installation....19
Mounting....19
Ventilation....20
Connecting to AC mains....20
Electrical specifications....20
Planning the power of the electrical generator....21
Power cord....21
Plugging the amplified controller....21

Power consumption....22
Heat power calculation....22
Audio and network cabling....22
Connection panels....22
Analog audio....25
Digital audio....26
L-NET/AVB....27
Speaker....27

Operation....28
Powering on....28
Powering off....28
Setting to standby mode....28
Interpreting the front panel LEDs....29
STATUS....29
L-NET....29
Meters....30
OUT....30
Main screen description....31
Using quick access functions....32
Locking/Unlocking the front panel....32
Muting/Unmuting an output channel....32
Modifying gain....32
Identifying an amplified controller....33
Displaying input level, input selection, input mode and group information....34
Using the main menu....35
LOAD PRESET....36
STORE PRESET....38
DELETE PRESET....39
PRESET PARAMETERS....39
CLEAR GROUP PARAMS....41
INPUT SETTINGS....42
MONITORING & INFO....50
OPTIONS....53
IP SETTINGS....58
Settings protection....62

Corrective maintenance....64
Introduction....64
Equipment and tools....64
Screws repair kit....65
Troubleshooting and diagnosis....65

Interface issues....65
L-NET network issues.... 66
Error messages.... 67
Sound issues....73
Exploded view....75
Exploded view - external modules....75
Disassembly and Reassembly procedures.... 76
D/R - Grill and foam filter....76
D/R - Side bracket....77
D/R - Rear bracket....78
D/R - Rear bracket support screws.... 79
D/R - Front handle....80
D/R - Encoder wheel knob.... 81

Specifications.... 82
General.... 82
Input signal distribution....84
Analog input.... 84
Digital input.... 84
Latency....85
AVB....85
Automatic fallback option.... 85
Remote control and monitoring....86
Physical data....86

Appendix A - Glossary.... 87

Appendix B - List of AVB reservation (RSV) errors.... 87

Appendix C - List of AVB connection (CON) errors....89

Appendix D - Approvals.... 90

Safety

Important safety instructions

Explanation of graphical symbols

The lightning flash with arrowhead symbol within an equilateral triangle is intended to alert the user to the presence of uninsulated "dangerous voltage" within the product's enclosure that may be of sufficient magnitude to constitute a risk of electric shock to persons.

The exclamation point within an equilateral triangle is intended to alert the user to the presence of important operating and maintenance instructions in the literature accompanying the product.

1. Read these instructions.

2. Keep these instructions.

3. Heed all warnings.

4. Follow all instructions.

5. Do not use this apparatus near water.

6. Clean only with dry cloth.

7. Do not block any ventilation openings. Install in accordance with the manufacturer's instructions.

8. Do not install near any heat sources such as radiators, heat registers, stoves, or other apparatus (including amplifiers) that produce heat.

9. Do not defeat the safety purpose of the grounding-type plug. A grounding-type plug has two blades and a third grounding prong. The third prong is provided for your safety. If the provided plug does not fit into your outlet, consult an electrician for replacement of the obsolete outlet.

10. Protect the power cord from being walked on or pinched particularly at plugs, convenience receptacles, and the point where they exit from the apparatus.

11. Only use attachments/accessories specified by the manufacturer.

12. Use only with the cart, stand, tripod, bracket, or table specified by the manufacturer, or sold with the apparatus. When a cart is used, use caution when moving the cart/apparatus combination to avoid injury from tip-over.

13. Unplug this apparatus during lightning storms or when unused for long periods of time.

14. Refer all servicing to qualified service personnel. Servicing is required when the apparatus has been damaged in any way, such as power-supply cord or plug is damaged, liquid has been spilled or objects have fallen into the apparatus, the apparatus has been exposed to rain or moisture, does not operate normally, or has been dropped.

15. WARNING: To reduce the risk of fire or electric shock, this apparatus should not be exposed to rain or moisture and objects filled with liquids, such as vases, should not be placed on this apparatus.

16. To completely disconnect this equipment from the mains, disconnect the power supply cord plug from the receptacle.

Pour déconnecter complètement l'appareil du secteur, débranchez la prise de la fiche secteur.

17. The main plug of the power supply cord shall remain readily accessible.

La prise principale du cordon d'alimentation doit rester totalement accessible.

Additional important safety instructions

Inspect the product before operation.

If any sign of defect or damage is detected, immediately withdraw the product from use for maintenance.

Perform preventive maintenance at least once a year.

Refer to the preventive maintenance section for a list of actions and their periodicity.

Insufficient upkeep of the product can void the warranty.

Verify the electrical conformity and compatibility of the mains supply.

Only connect the product to an AC power outlet rated 100-240 V, 50-60 Hz, with the following current values:

100-120 V: 30 A

220-240 V: 16 A

WARNING: The product is of Class 1 construction and shall be connected to a mains socket outlet with a Protective Earth connection.

When the product is used in a three-phase circuit, verify the electrical conformity and compatibility of the three-phase circuit.

Verify that the three phases work, and balance the loads between the three phases.

Verify that the neutral and earth work.

Never try to emulate a 230 V circuit connecting an apparatus to two live wires of a 120 V three-phase circuit.

Never try to emulate a 200 V circuit connecting an apparatus to two live wires of a 100 V three-phase circuit.

The power supply feeding LA12X must be equipped with circuit breakers meeting the following requirements:

The circuit breaker must operate on each phase separately (no mechanical link between phases).

Use these references, or equipment with equivalent characteristics:

100-120 V: 30 A, Schneider Electric Square D 30A QO (in North America), or Mitsubishi CP30-BA-M (in Japan).

220-240 V: 16 A, Type C.

Circuit breakers of different characteristics could trip in case of short-term, high current draw, because they do not match LA12X Fuse Protect algorithms.

Electrical generator

You must power on the generator before powering on the product.

Verify that the product is turned off before powering on the generator.

Terminals marked with the lightning flash symbol are HAZARDOUS LIVE.

The external wiring connected to these **terminals** requires installation by an **instructed person** or the use of ready-made leads or cords.

Never attempt to touch any exposed speaker wiring while the product is operating: first disconnect the connector from the product.

Mute all output channels before connecting a speaker to an amplified controller.

Do not connect a speaker output in parallel or series with any output of another amplified controller.

Do not connect the speaker outputs to any other voltage source, such as a battery, power mains, or power supply, regardless of whether the amplified controller is turned on or off.

Never incorporate equipment or accessories not approved by L-Acoustics.

Read all the related PRODUCT INFORMATION documents shipped with the products before exploiting the system.

Intended use

This system is intended for use by trained personnel for professional applications.

As part of a continuous evolution of techniques and standards, L-Acoustics reserves the right to change the specifications of its products and the content of its documents without prior notice.

Check www.l-acoustics.com on a regular basis to download the latest document and software updates.

Beware of sound levels.

Do not stay within close proximity of loudspeakers in operation.

Loudspeaker systems are capable of producing very high sound pressure levels (SPL) which can instantaneously lead to permanent hearing damage to performers, production crew and audience members. Hearing damage can also occur at moderate level with prolonged exposure to sound.

Check the applicable laws and regulations relating to maximum sound levels and exposure times.

Beware of over power risks.

Only use compatible loudspeakers with appropriate presets to avoid damage to the loudspeakers.

Do not use the product outside its operating temperature range.

The product operates at a room temperature between -5 °C / 23 °F and 50 °C / 122 °F.

Do not expose the product to direct sun.

Only use the product in a conformed electro-magnetic environment.

Conformed environments are: E1 (residential), E2 (commercial and light industrial), E3 (urban outdoors), E4 (controlled EMC environment, ex. TV studio), E5 (heavy industrial), as per EN55103-2 standards.

Avoid radio interference.

This product has been tested and complies with the limits indicated in the EMC directive (Electro Magnetic Compatibility). These limits are designed to provide reasonable protection against harmful interference from electrical equipment, but it cannot be guaranteed that interference will never occur.

Read the maintenance section of this document before servicing the product.

Contact L-Acoustics for advanced maintenance.

Any unauthorized maintenance operation will void the product warranty.

Before sending a product to L-Acoustics for maintenance, save all user presets to files using LA Network Manager.

Shipping

Use the original packaging for shipping the product, unless it is mounted in a rack with the front and rear panels fixed to the rack, as described in this manual.

Introduction

LA12X amplified controller

L-Acoustics amplified controllers offer high performance and efficient loudspeaker amplification, digital signal processing and comprehensive system protection in a single ergonomic package. The onboard preset library allows for rapid system optimization with minimum EQ correction and delivers a unique sonic signature across all L-Acoustics systems.

The LA12X is the most powerful unit in the range. Thanks to its DSP-controlled, universal Switched Mode Power Supply with advanced Power Factor Correction, it delivers high output power with outstanding hold times even on less-than-ideal A/C mains. It offers maximum versatility with its 4x4 architecture and its ability to drive all L-Acoustics loudspeaker enclosures including the KS28 reference subwoofer.

How to use this manual

The LA12X owner's manual is intended for all actors involved in the system design, implementation, preventive and corrective maintenance of the LA12X product. It must be used as follows:

1. Read the technical description for an overview of all product elements, their features, and their compatibilities.
   - Technical description (p.13)
2. Before installing the product, perform mandatory inspections and functional checks.
   - Inspection and preventive maintenance (p.17)
3. To deploy the product, follow the step-by-step installation instructions and refer to the cabling schemes.
   - Installation (p.19)
   - Audio and network cabling (p.22)
4. To configure the settings and parameters of the product, follow the step-by-step operation instructions.
   - Operation (p.28)

The Corrective maintenance (p.64) section contains the operations authorized for the end user.
Performing another operation exposes to hazardous situations.
For advanced maintenance, contact your L-Acoustics representative.

As part of a continuous evolution of techniques and standards, L-Acoustics reserves the right to change the specifications of its products and the content of its documents without prior notice.

Check www.l-acoustics.com on a regular basis to download the latest document and software updates.

Contact information

For information on advanced corrective maintenance:
- contact your Certified Provider or your L-Acoustics representative
- for Certified Providers, contact the L-Acoustics customer service: customer.service@l-acoustics.com (EMEA/APAC), laus.service@l-acoustics.com (Americas).

Symbols

The following symbols are used in this document:

This symbol indicates a potential risk of harm to an individual or damage to the product.
It can also notify the user about instructions that must be strictly followed to ensure safe installation or operation of the product.

This symbol indicates a potential risk of electrical injury.
It can also notify the user about instructions that must be strictly followed to ensure safe installation or operation of the product.

This symbol notifies the user about instructions that must be strictly followed to ensure proper installation or operation of the product.

This symbol notifies the user about complementary information or optional instructions.

Do not open unless authorized.
This symbol indicates the presence of electrical shock hazards.
It also indicates that no maintenance performed by the end user requires access to internal components.

Revision history

version number	publication date	modification
7.2	Oct. 2019	Initial version in the owner's manual format.
8.0	Nov. 2019	Updated the Error messages (p.67).
8.1	Dec. 2019	Fixed minor issues.
9.0	Apr. 2020	LA12X is compliant with MILAN.
9.1	Dec. 2020	Fixed minor issues.
9.2	Oct. 2021	• Added information on the circuit breaker to the Specifications (p.82). • Updated the Error messages (p.67).
9.3	Jan. 2022	Updated RESET TO FACTORY DEFAULT SETTINGS? (p.57).
9.4	Apr. 2022	Updated power consumption in Idle and Standby modes.
9.5	Nov. 2022	• Updated SPANNING TREE (p.54) and NETWORK MODE (p.55). • Added recommandations on using multicore loudspeaker cables..
10.0	May 2023	• Updated the noise level in Specifications (p.82). • Fixed minor issues.

System components

Powering and driving system

LA12X	Amplified controller with DSP, preset library and networking capabilities

Loudspeaker enclosures

Refer to the user documentation of the loudspeaker systems for detailed instructions about the enclosures and their connection to the amplified controllers.

Rack

LA-RAK II AVB	Touring rack containing three LA12X, LA-POWER II for power distribution, LA-PANEL II for audio and network distribution, and two LS10 for AVB distribution

Case

L-Case	2U Electronics transport and protection case

Cables

DOE cables	Dual AVB Network cable CAT6A, etherCON (black = primary network, red = secondary network) Come in different sizes: DOE2 (2 m / 6.6 ft), DOE45 (45 m / 147.6 ft), and DOE100 (100 m / 328.1 ft)

Software applications

Soundvision	3D acoustical and mechanical modeling software
LA Network Manager	Software for remote control and monitoring of amplified controllers

Refer to the **Soundvision** help.
Refer to the **LA Network Manager** help.

System component illustrations

Cables

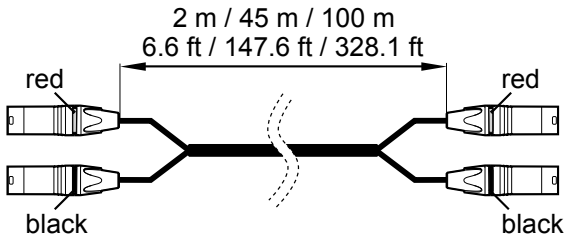

DOE cables

Software applications

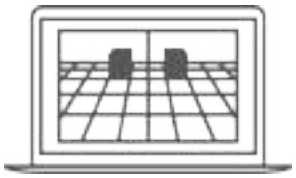

Soundvision

LA Network Manager

Technical description

Main features

Internal components

The core of the LA12X is a dual DSP engine driving four channels of amplification from four inputs. The LA12X also features a flash memory for preset storage and management, high performance A/D-D/A converters and AES/EBU inputs for audio signals, a universal SMPS (Switched Mode Power Supply) with PFC (Power Factor Correction), a front panel user interface, and a 1 Gb/s Ethernet dual port.

Front and rear panels

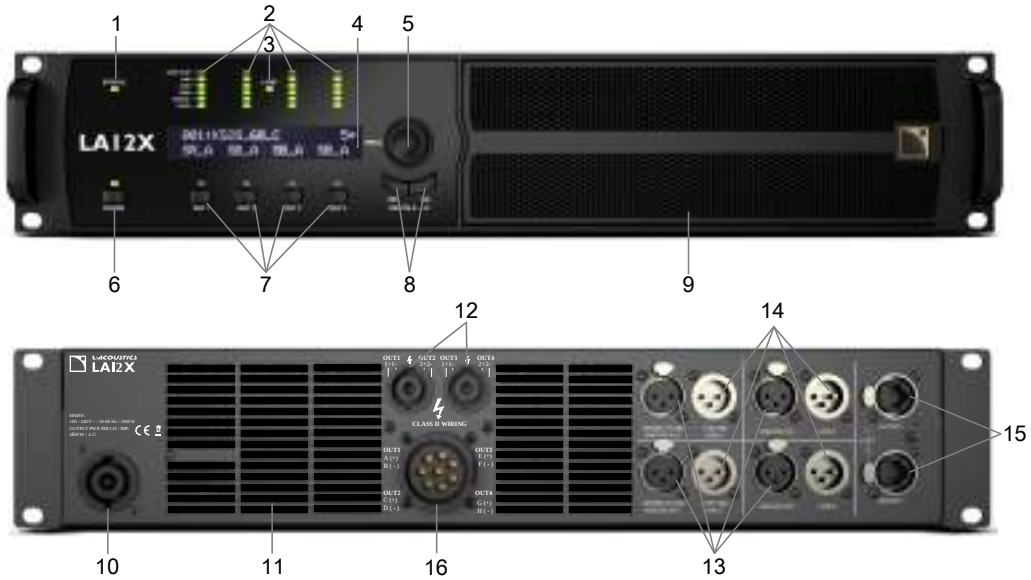

1 status LED

2 LED meters:

— LIMIT/CLIP level

— audio levels (-5 dB, -10 dB and -20 dB)

— SIGNAL presence

— LOAD presence

3 L-NET network control LED

4 2 x 24 characters LCD display

5 navigation/edition encoder wheel

6 power/standby key and LED

7 channel selection keys

8 menu keys

9 inward ventilation grill and foam filter

10 powerCON power supply connector (32 A)

11 outward ventilation grills

12 speakON output connectors

13 XLR analog and AES/EBU input connectors

14 XLR analog and AES/EBU link connectors

15 1 Gb/s etherCON network connectors

16 8-point output connector

Signal processing and amplification

Signal inputs

The LA12X features four input connectors allowing it to receive four analog signals, four digital signals, or two analog and two digital signals, depending on the input mode selected by the user — see section XLR INPUT MODE (p.44). This architecture also allows digital-to-analog or digital-to-digital fallback.

In addition, four channels may be retrieved from an AVB stream containing up to eight channels at 48 kHz or 96 kHz, connected by one of the two 1 Gb/s Ethernet ports.

AVB

One AVB stream of up to eight channels may be connected to LA12X. LA12X retrieves up to four channels from this stream.

Each Ethernet port uses a high speed data transfer protocol up to 1 Gb/s and supports the IEC 61883-6 AM824 and AAF PCM32 stream formats with stream frequencies of 48 kHz or 96 kHz.

The amplified controller synchronizes its audio clock on the clock used by the talker through the incoming stream.

LA12X embeds an AVB bridge and may therefore be used to create an AVB network.

In redundant mode, LA12X can receive two parallel streams from two separate networks to mitigate network failures.

AES/EBU

LA12X can be fed with up to four AES/EBU digital audio signals (transported in pairs) using XLR input connectors AES/EBU IN A&B and AES/EBU IN C&D.

Each AES/EBU input port is an XLR female connector. The audio signals can come from a digital mixing desk or a digital audio network bridge compliant with the AES/EBU (AES3) digital audio standards. Each AES/EBU input port is ESD protected and transformer balanced.

The AES/EBU input panel also features two XLR male link ports actively connected to the input ports (with failsafe relay in case of mains absence). The link connectors allow transmitting the input signals to daisy-chained amplified controllers. Each AES/EBU link port is ESD protected and transformer balanced.

Each AES/EBU input port is equipped with an SRC (Sample Rate Converter) that has been selected to support a wide range of input formats (16 - 24 bits / 44.1 - 192 kHz). The SRC converts the formats to the 24 bits / 96 kHz internal format used by the amplified controller. The SRC is a high-quality hardware component (140 dB dynamic range, THD+N < -120 dBFS, strong input jitter attenuation) and provides constant propagation delay regardless of the input sampling frequency.

There is no external synchronization mode. The amplified controller's clock runs using its high-precision internal quartz at 96 kHz (or on the clock of the connected AVB input stream). This ensures low jitter and high audio quality in live conditions (large cable lengths, large number of amplified controllers) while preventing phase shift, as required for line source systems.

Digital domain benefits

Keeping the signal in the digital domain provides the following benefits (with any digital mixing desk or any audio device) compared to the analog signal distribution:

- Better audio quality by removing one D/A - A/D cycle.
- Optimized level chain by removing the risk of level misalignment between console and amplified controllers.
- Digital signal refreshed at each amplified controller in a daisy-chain.
- Improved maximum cable length. LA12X has been tested with up to 300 m / 984 ft of two models of AES/EBU rated cables (single cuts, digital source signal running at Fs = 48 kHz):
  - 1696A from BELDEN INC.
  - OT234H from KLOTZ communications GmbH.

Analog

LA12X can be fed with up to four balanced analog audio signals using XLR female input connectors ANALOG IN A to ANALOG IN D — see illustration in section Front and rear panels (p.13). Each analog input port is ESD protected.

The analog input panel also features four XLR male link connectors passively wired to the input connectors. The link connectors allow transmitting the input signals to daisy-chained amplified controllers. Each analog link port is ESD protected.

To be processed by the DSP, the analog signal must be converted into a digital signal. For this purpose, the LA12X amplified controller is fitted with two cascaded 24-bit A/D converters with a sampling rate of 96 kHz allowing an encoding dynamic range of 130 dB.

DSP architecture

The proprietary algorithms allow optimum performance and protection of each individual transducer of the L-Acoustics systems for an even more natural, transparent, and realistic sound experience.

- The DSP engine is a 32-bit floating point DSP at 96 kHz sampling rate providing an enhanced dynamic range since it does not generate calculation clips like a fixed point DSP.
- A dedicated engineering approach combining IIR and FIR filters generates perfectly linearized phase curves and significantly improved impulse responses.
- The 4 × 4 matrix architecture offers flexibility for various system configurations.
- A delay of up to 1000 ms can be set for each output channel.
- The L-DRIVE transducer protection system offers advanced protection by simultaneously monitoring the excursion and the temperature of the transducer.
- With a complete factory preset library and the possibility to create additional user presets, the flash memory provides a quick access to all the usual L-Acoustics speaker system configurations (refer to the **Preset Guide**).

audio path parameters

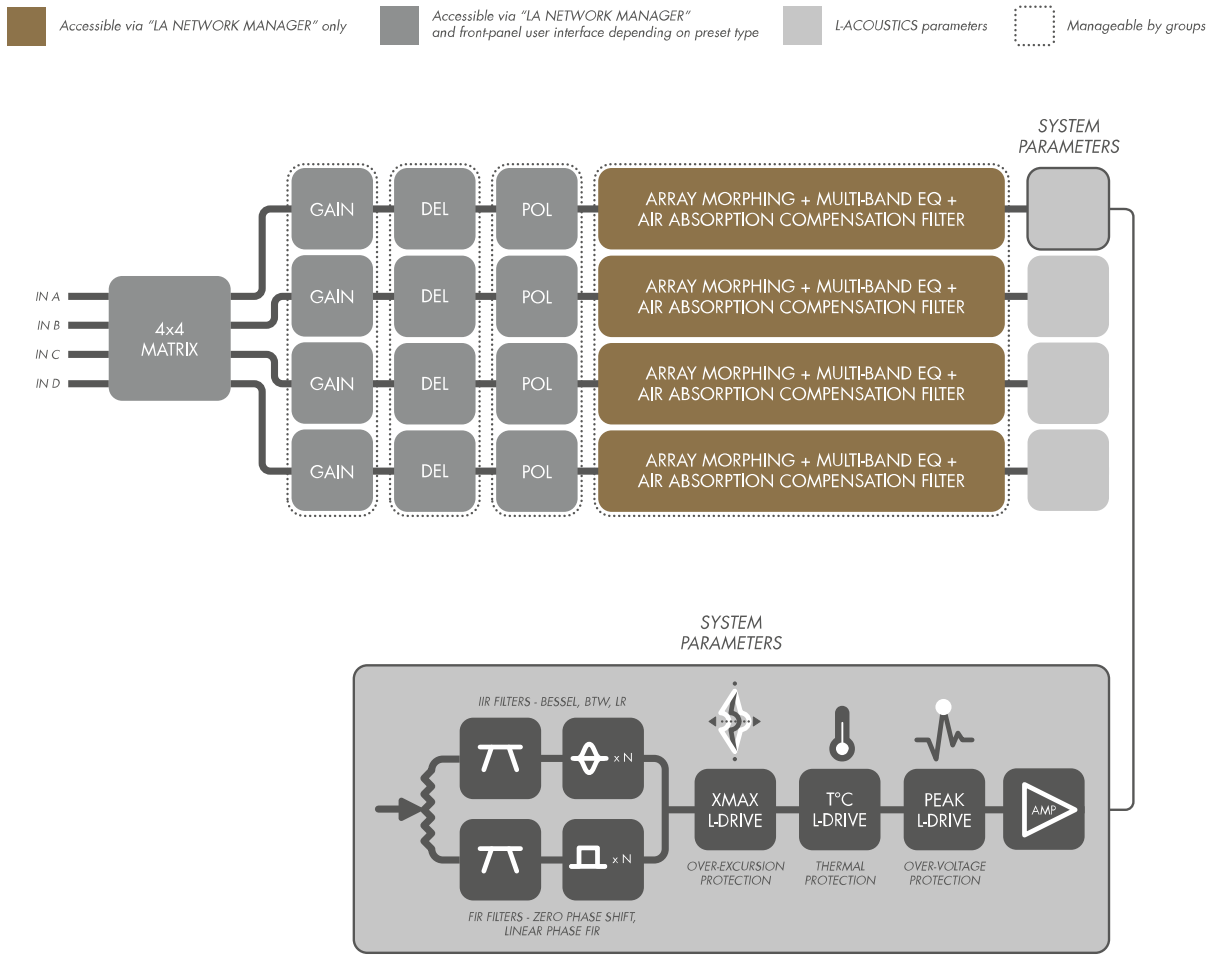

Power supply and amplifier section

The Class D amplification circuits ensure the LA12X energy-efficiency for minimal heat dissipation. LA12X delivers 4 x 1400 W at 8 Ω, 4 x 2600 W at 4 Ω or 4 x 3300 W at 2.7 Ω.

LA12X is a green amplified controller that relies on a universal SMPS (Switch Mode Power Supply) suitable for mains from 100 to 240 V (±10%). The SMPS features a PFC (Power Factor Correction) which maximizes the amplifier efficiency and takes advantage of nearly 100% of the electrical power available with a very high tolerance to unstable mains. This represents a reduction of the electrical power requirements (cable gauge, power conditioning, etc.) for substantial savings.

Speaker outputs

LA12X features two 4-point speakON connectors and one 8-point connector for loudspeaker outputs.

Speaker protection

The L-DRIVE transducer protection system provides a dual analysis of both signal intensity and voltage in real-time and RMS. Under extreme conditions, when component membranes reach the over-excursion zone or if the coil temperature reaches a critical point, L-DRIVE is activated and acts as a power regulator.

As a result, the amount of power delivered at any channel is adjusted to the dynamic and thermal capacity of each individual transducer.

Monitoring and control

User interface

The front panel user interface provides:

- Real-time monitoring functionalities via the LED display (signals presence and level) and the LCD screen (system parameters).
- Instant access to navigation and parameters control using the encoder wheel and the six keys.

See also illustration in section Front and rear panels (p.13).

Refer to section Operation (p.28) for detailed operating instructions.

L-NET remote control network

The integration of the L-NET Ethernet-based network, with its high speed data transfer protocol up to 1 Gbit/s, allows up to 253 amplified controllers to be controlled and monitored in real-time from LA Network Manager.

Multiple network topologies such as daisy-chain, star and hybrid are configurable. The computer running LA Network Manager and the amplified controllers are connected to each other using industry standard CAT5e U/FTP cables (or higher category) fitted with RJ45 connectors.

The LA12X connects to the network via the two etherCON sockets located on its rear panel.

Refer to the **LA Network Manager** Help for detailed operating instructions.

Third party management solutions

L-Acoustics provides SNMP support to facilitate the integration via third party control and monitoring systems.

L-Acoustics is a certified member of the Crestron® and Extron® partner programs, and provides software modules allowing control integration into their automation systems.

L-Acoustics provides a plug-in for control and monitoring of LA4X and LA12X on the QSC Q-SYS platform.

Inspection and preventive maintenance

How to do preventive maintenance

Inspect the product periodically as indicated, and after any corrective maintenance operation.

Structure and cleanness

Before and after each deployment (touring applications), or at least once a month (fixed installations):

- CHK - External structure (p.17)
- CHK - Cleanness (p.18)

Functionalities

At least once a year:

- CHK - Normal start-up sequence (p.18)
- CHK - Network functionalities and firmware (p.18)

CHK - External structure

The indicates a visual inspection.

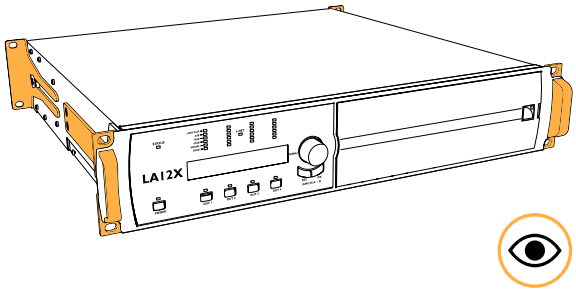

side brackets, front handles, and rear brackets are present and not damaged

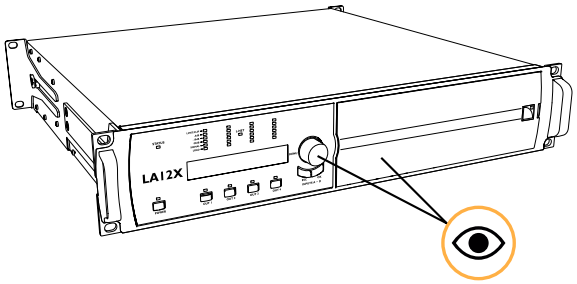

encoder wheel, and grill and foam filter are present and not damaged

see also CHK - Cleanness (p.18)

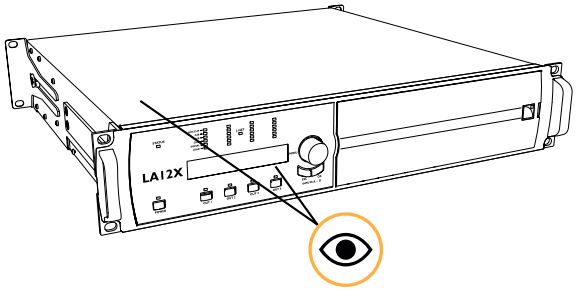

chassis, Lexan plate, LCD screen, and LEDs are not damaged

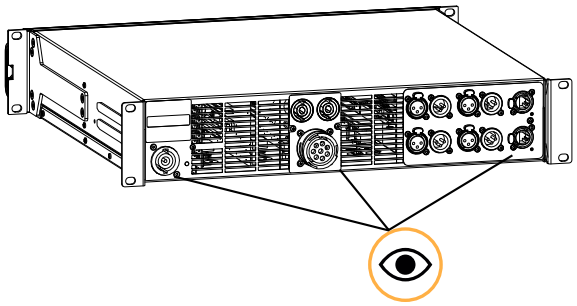

connectors are not damaged

CHK - Cleanness

Equipment

- air blower

Procedure

1. Disassemble the grill to clean the foam filter.
   Refer to the D/R - Grill and foam filter (p.76) procedure.
2. Clean the amplified controller through the front grill with an air blower.
3. Reassemble the foam filter and the grill.

CHK - Normal start-up sequence

Procedure

1. Plug the amplified controller to mains.
2. Power on the amplified controller.
3. Check that the LCD screen and the Status, Power and Mute LEDs light up during the start-up sequence.
4. Check that fan noise can be heard for a few seconds during the start-up sequence.

CHK - Network functionalities and firmware

Equipment

- computer with LA Network Manager version 2.4.3 minimum
- appropriate network cable

Procedure

1. Connect the Ethernet port 1 of the amplified controller to an Ethernet port of a computer running LA Network Manager.
   Use the CAT5e U/FTP cable.
2. Run LA Network Manager.
3. Check that the amplified controllers are detected as online Units.
   Refer to the **LA Network Manager Help**.
4. Check that all LA12X in the system run the same version of the firmware, and that it matches with the version of LA Network Manager in use.
   Refer to the **LA NWM and Firmware Compatibility Issues** technical bulletin.
5. If convenient, update LA Network Manager and the firmware to the latest versions.

   i If using a third-party control system such as Crestron or QSC Q-SYS, check that updating the firmware does not break compatibility.

Installation

Mounting

The LA12X is two rack units high (2U) and can be mounted in an EIA-standard 19″ rack using the four points on the front panel. Use the fixing material provided by the rack manufacturer to mount the controller to the rack front rails.

LA12X dimensions

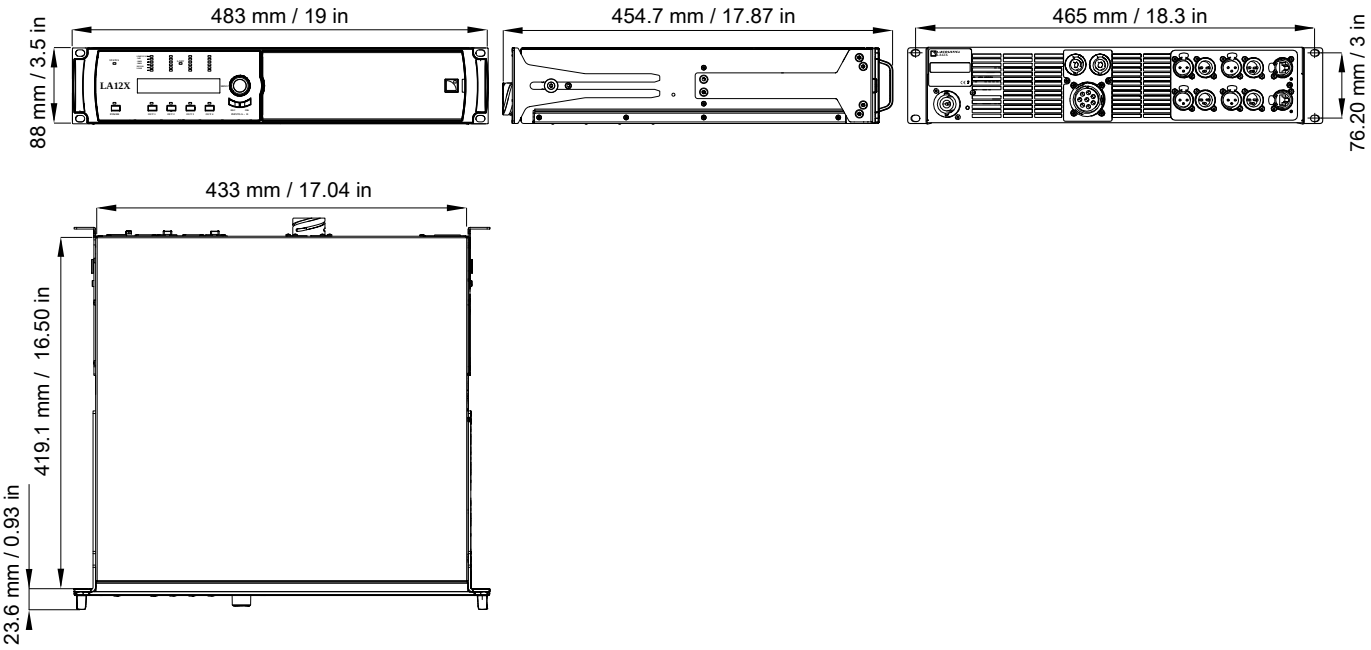

Risk of damaging the amplified controller during transport

During transport or while on tour the amplified controller should be rear supported in addition to the front panel mounting.

Use the rear brackets provided with the amplified controller.

Any mechanical damage to the amplified controller used in portable applications without rear support is not covered by warranty.

LA12X with rear rack support brackets

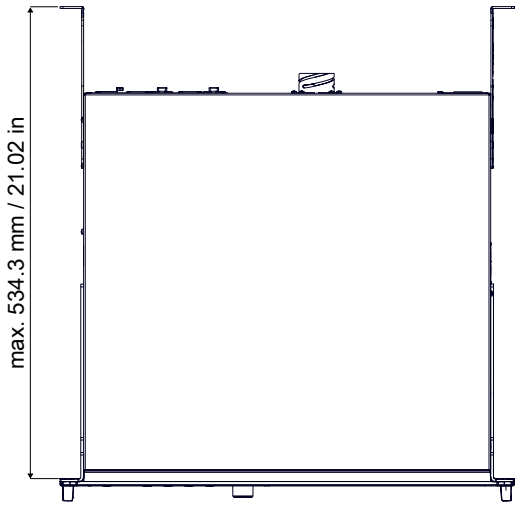

The LA-RAK II AVB touring rack contains three LA12X, and panels for power, audio and network distribution. Refer to the **LA-RAK II AVB** user manual.

Ventilation

To maintain moderate operating temperatures, the LA12X is equipped with fans and grills providing front to rear airflow.

Ventilation instructions

Install the controller in an open area so that the front and rear panels are located at a minimum distance of 30 cm / 12 in from any external object or structure.

Ensure the front foam filter is clean and dirt free.

Do not block the front and rear ventilation grills.

Ventilation when rack-mounted

Do not block the ventilation grills with front or back panels or doors. If not possible, use a forced-ventilation system.

When stacking more than one controller in a rack, mount them directly on top of each other or close any open space in the rack with blank panels.

Connecting to AC mains

Electrical specifications

AC mains specifications

Verify the electrical conformity and compatibility of the mains supply.

Only connect the product to an AC power outlet rated 100-240 V, 50-60 Hz, with the following current values:

100-120 V: 30 A

220-240 V: 16 A

WARNING: The product is of Class 1 construction and shall be connected to a mains socket outlet with a Protective Earth connection.

Three-phase circuit

When the product is used in a three-phase circuit, verify the electrical conformity and compatibility of the three-phase circuit.

Verify that the three phases work, and balance the loads between the three phases.

Verify that the neutral and earth work.

Never try to emulate a 230 V circuit connecting an apparatus to two live wires of a 120 V three-phase circuit.

Never try to emulate a 200 V circuit connecting an apparatus to two live wires of a 100 V three-phase circuit.

Circuit breaker

The power supply feeding LA12X must be equipped with circuit breakers meeting the following requirements:

The circuit breaker must operate on each phase separately (no mechanical link between phases).

Use these references, or equipment with equivalent characteristics:

100-120 V: 30 A, Schneider Electric Square D 30A QO (in North America), or Mitsubishi CP30-BA-M (in Japan).

220-240 V: 16 A, Type C.

Circuit breakers of different characteristics could trip in case of short-term, high current draw, because they do not match LA12X Fuse Protect algorithms.

Planning the power of the electrical generator

Electrical generator

You must power on the generator before powering on the product.

LA12X draws 16 A from 230 V.

A typical generator has a power factor of 0.8 and should operate at 70% load for good efficiency.

The kVA provision for one LA12X should therefore be:

(16 A × 230 V) / (0.8 × 70%) = 6.5 kVA

This calculation is an example using typical values. It can be adapted using the table in section Power consumption (p.22).

Power cord

The removable power cord is fitted at one end with a 32 A powerCON connector.

The other end and the wires color code depends on the cord type, as follows:

type	plug	live	neutral	ground
CE CN	CEE 7/7, 16 A / 250 V, grounded GB1002 GB2099, 16 A	brown	blue	green/yellow
US	NEMA L5-30P, 30 A / 125 V, grounded	black	white	green
INT	bare ends (local power plug to be fitted)	black	white	green/yellow

Strictly apply the specific safety regulations of the country of use.

Do not defeat the ground connection of the supplied power cord using an adaptor or any other method.

A suitable plug must be wired to the INT power cord.

Verify that the plug conforms to the specific voltage and current rating given in section Electrical specifications (p.20).

Plugging the amplified controller

How to plug the amplified controller to the AC mains.

Procedure

— First, connect the powerCON to the amplified controller mains panel.

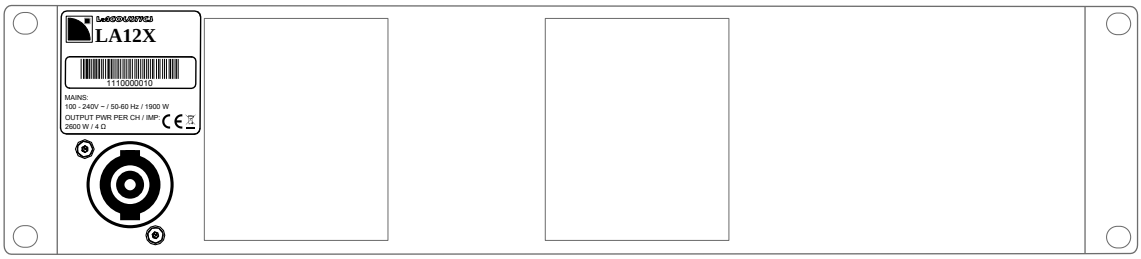

— Then, connect the power plug to the mains socket.
Following this order improves the powerCON longevity.

Power consumption

The LA12X power requirements depend on the load impedance and the signal level.

Mains input power and current draw (all channels driven)

Maximum output power	4 x 1400 W at 8 Ω	4 x 2600 W at 4 Ω	4 x 3300 W at 2.7 Ω
1/3 output power (-5dB)	10.5 A / 2300 W	19 A / 4200 W	26 A / 5500 W
1/8 output power (-9 dB)	4.8 A / 1050 W	8.1 A / 1850 W	11.5 A / 2400 W

Current values given for mains rated at 230 V. Multiply by:

- 2.3 for 100 V
- 1.9 for 120 V
- 1.15 for 200 V

Output power references

A third (1/3) of the maximum output power corresponds to the worst case scenario of a program source using highly compressed music or pink noise with amplified controller driven to clip level.

An eighth (1/8) of the maximum output power corresponds to a loud music program with a small dynamic range and 9 dB of headroom (IEC standard power rating).

Mains input power and current draw in Idle and Standby modes

	230 V	**120 V**	**100 V**
Idle	1 A / 141 W	1.2 A / 141 W	1.3 A / 141 W
Standby	0.6 A / 10 W	0.4 A / 10 W	0.3 A / 10 W

Heat power calculation

If a 4 Ω load is connected to each output channel of the LA12X, each channel delivers up to 2600 W.

With a standard use at 1/8 of full power (9 dB headroom), the power delivered per channel is:

2600 / 8 = 325, so a total power of 4 x 325 = 1300 W.

According to the table in section Power consumption (p.22), the LA12X power consumption is 1850 W. The heat power produced is then (difference between power consumption and output power):

1850 - 1300 = 550 W

Audio and network cabling

Connection panels

The amplified controller's rear side features connectors for audio and network cabling:

1. For connection to the loudspeakers.
2. For connection of the analog and digital (AES/EBU) audio sources, and for linking the signals to another amplified controller.
3. For connection to an AVB network, and to be remotely controlled by LA Network Manager.

LA12X audio and network connection panels

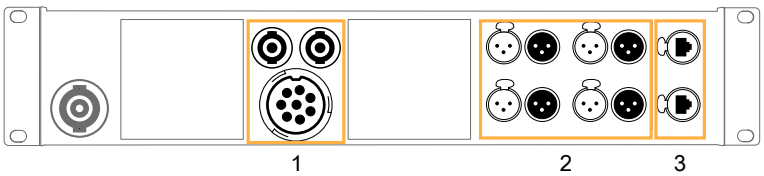

Speaker panel

The two 4-point speakON connectors and the 8-point connector on the rear panel are for loudspeaker connection. They are wired as follows:

left speakON connector		right speakON connector	
Pin 1+	Out 1+	Pin 1+	Out 3+
Pin 1 -	Out 1 -	Pin 1 -	Out 3 -
Pin 2+	Out 2+	Pin 2+	Out 4+
Pin 2 -	Out 2 -	Pin 2 -	Out 4 -

8-point output connector			
Pin A	Out 1+	Pin E	Out 3+
Pin B	Out 1 -	Pin F	Out 3 -
Pin C	Out 2+	Pin G	Out 4+
Pin D	Out 2 -	Pin H	Out 4 -

output audio paths

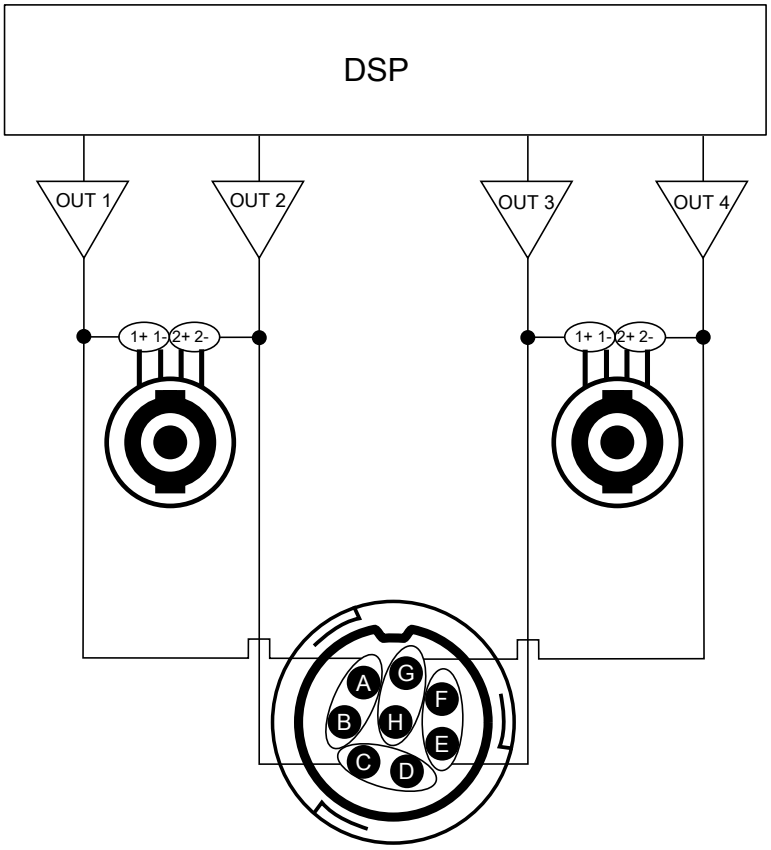

Signal panels

The eight XLR connectors on the rear panel are for analog or digital signal cabling.

The XLR connectors can transport analog or digital signals depending on the input mode selected by the user for channel pairs AB and CD (the two selections can be different). Connections to the IN connectors are referenced in the table. Refer also to section XLR INPUT MODE (p.44).

input mode AB	**IN A / IN A&B**	**IN B**
Analog	analog audio source (1 channel)	analog audio source (1 channel)
AES/EBU	digital audio source (2 channels)	not used

input mode CD	**IN C / IN C&D**	**IN D**
Analog	analog audio source (1 channel)	analog audio source (1 channel)
AES/EBU	digital audio source (2 channels)	not used

Each LINK connector is wired to the corresponding IN connector, and thus transports the same type of signal.

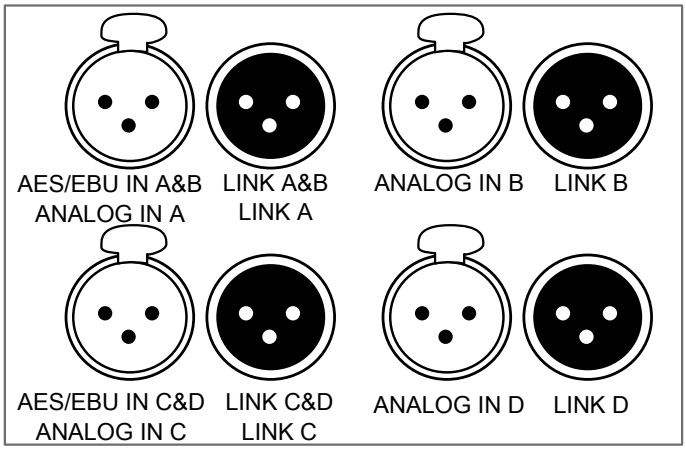

Analog input mode

The XLR connectors are wired according to IEC 60268-12:

- pin 1: shield
- pin 2: + signal
- pin 3: - signal

The female XLR input connectors ANALOG IN A to ANALOG IN D can receive up to four analog signals (when setting the analog input mode for channel pairs AB and CD). The headroom of the input circuits is high enough to accept the maximum output level from virtually any line level signal source (up to 22 dBu).

Each LINK connector is passively wired in parallel to the corresponding IN channel. The input impedance is high enough (22 kΩ, balanced) to allow multiple parallel input connections.

AES/EBU input mode

Digital audio source specifications
Standard: AES/EBU (AES3)
Sampling frequency: 44.1, 48, 88.2, 96, 176.4 or 192 kHz
Word length: 16, 18, 20 or 24 bits

The AES/EBU inputs are transformer balanced and their XLR connectors are wired according to IEC 60268-12.

The female XLR input connectors AES/EBU IN A&B and AES/EBU IN C&D can receive up to four digital signals (when setting the AES/EBU input mode for channel pairs AB and CD). The input format is AES/EBU (AES3).

Each LINK connector is electronically buffered to allow daisy-chaining any number of amplified controllers. It also features a failsafe relay to ensure wiring continuity in case of amplified controller shutdown.

L-NET panel

Use the two etherCON connectors for the remote control of LA12X over the L-NET network using LA Network Manager. The etherCON connectors are AVB-capable.

In normal network mode, the two etherCON connectors are part of an internal AVB switch, and allow for daisy-chaining of additional devices.

In redundancy mode, the two etherCON connectors are independent: the LINK/ACT 1 connector is used for the primary network, and the LINK/ACT 2 connector is used for the secondary network.

Analog audio

Balanced cables

Symmetrical (balanced) shielded cables are highly recommended as balanced signals are less sensitive to AC hum and radio interference.

Unbalanced lines may add noise especially over long cable runs.

In a daisy-chain layout, the male XLR link connectors LINK A to LINK D feed the input signal to the next amplified controller in the signal chain.

daisy-chaining analog audio

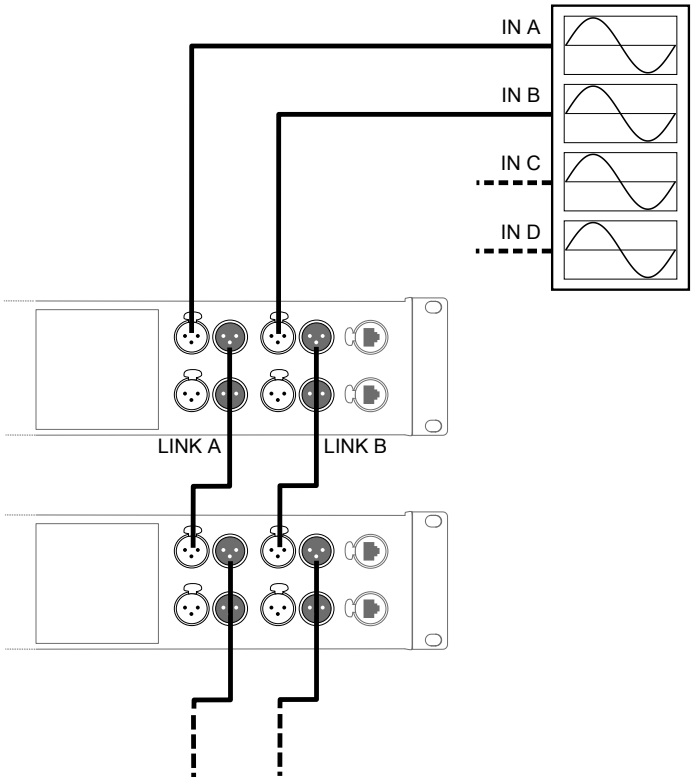

Analog daisy-chain and LA4/LA8 with power off or in standby

In an analog daisy-chain, LA4 and LA8 with power off or in standby cause sound distortion at high input levels to the other amplified controllers they are connected to.

Make sure all LA4 and LA8 are powered on and in operating (not in standby) mode, or disconnect them from the daisy-chain.

Digital audio

In a daisy-chain layout, the male XLR link connectors LINK A&B and LINK C&D feed the input signals to the next amplified controller in the signal chain.

daisy-chaining digital audio

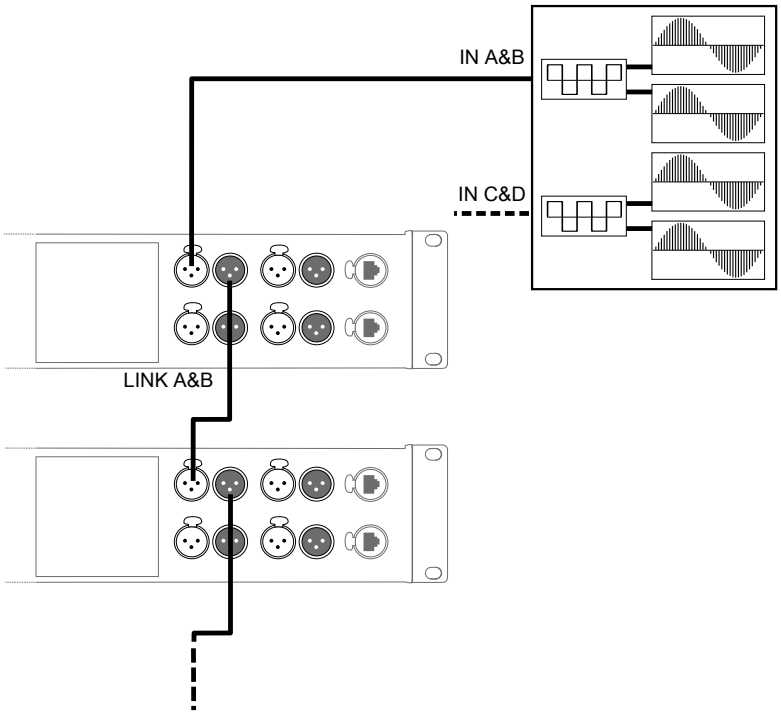

Cables for AES/EBU digital audio

AES3 specifies that the nominal characteristic impedance of cables used for AES/EBU digital audio transmission shall be 110 Ω ± 20%, and closer tolerances allow for increased transmission reliability over long lengths or higher sampling rates.

Therefore, it is highly recommended to use high-quality AES/EBU rated cables only, although certain cables designed for balanced analog audio prove to be acceptable at 48 kHz sampling rate over very short distances.

It is recommended to use single lengths of cable between AES/EBU outputs and inputs. Using several shorter cables joined together reduces performance. If it is not possible to use single lengths, it is required to use the same model of cable between two AES/EBU interfaces.

In case an amplified controller shuts down, the failsafe relay makes a passive connection between the AES/EBU IN ports and the LINK ports to maintain continuity. However the signals are no longer refreshed for the next amplified controller, so that the input cable and the link cable must be considered as a unique input cable with regard to the maximum supported length.

In case of transmission losses, try to reduce the sampling frequency of the digital audio source. Moreover, as a general rule, avoid using sources rated beyond 96 kHz, as the maximum possible cable length is reduced, while the additional information is discarded by the SRC to 96 kHz.

L-NET/AVB

Do not create loops in the network setup.

Always place LA4 and LA8 *after* other types of amplified controllers in daisy-chain networks.
LA4 and LA8 amplified controllers are equipped with former generation 100 Mb/s Ethernet ports that cannot communicate with Ethernet ports of different capabilities, creating detection issues in LA Network Manager.

Use the two etherCON connectors on the rear panel to connect LA12X both to L-NET and to an AVB network. Real-time audio traffic and control traffic are automatically managed by AVB on the same network.

LA12X supports AVB Milan in normal mode and in redundant mode. In Redundant mode, LA12X must be connected in star topology, port 1 being used for the primary network, port 2 being used for the secondary network. In normal mode, daisy-chain, star, or hybrid topologies are supported.

Refer to the **LA Network Manager** Help for network setup.

Speaker

Use the speakON or the 8-point output connectors to connect an enclosure to the amplified controller.

Consider supporting the cable connected to the 8-point output to reduce mechanical stress on the LA12X chassis.

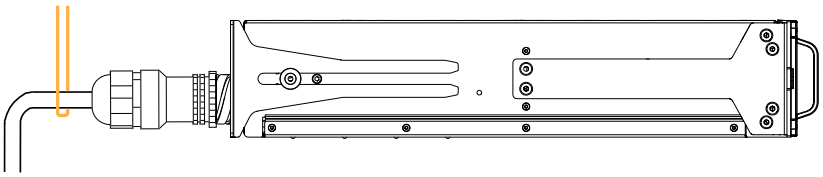

For cabling schemes, refer to the **Amplification reference** technical bulletin.

For the enclosure drive capacity per amplified controller, refer to the **Amplification reference** technical bulletin or the **Preset guide**.

Using multicore loudspeaker cables
Never connect more than one amplified controller on a single multicore loudspeaker cable.
Connecting several amplified controllers may cause audible interferences on the loudspeaker enclosures when the amplified controllers are in idle mode, even when muted.

Operation

Powering on

Press the POWER key (2) for one second.

The amplified controller goes through a 9 seconds start-up sequence displaying **Initializing Controller**. The POWER LED turns off, then is lit in orange (1).

The amplified controller is ready for use when the main screen is displayed and the power LED is lit in green. Refer to section Main screen description (p.31).

Powering off

Press the POWER key for one second.

The LCD screen and LEDs turn off. The POWER LED is lit in red to indicate that the controller is not disconnected from mains.

The amplified controller is no longer detected over the network.

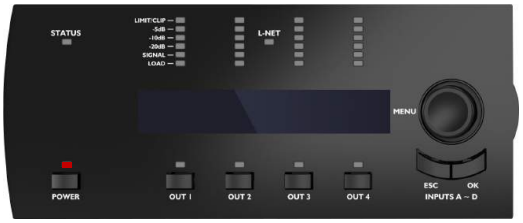

Powering off the amplified controller does not disconnect it from mains.

Power loss

If power is lost, the amplified controller shuts down, but all parameters are restored when the amplified controller switches on again.

Setting to standby mode

To reduce the electrical consumption, the amplified controller can be put in standby mode.

Use LA Network Manager to set the amplified controller to standby or back to operating mode. Refer to the **LA Network Manager** Help.

An amplified controller in standby mode displays **Standby mode** and its POWER LED is lit in orange.

Standby mode can also be cancelled from the amplified controller front panel by pushing and holding the encoder wheel for one second.

Interpreting the front panel LEDs

STATUS

The STATUS LED on the front panel displays the state of the amplified controller.

- green: when the LA12X operates normally
- red: during firmware update or when a fault is detected in the LA12X circuitry, indicating a protection system is active. Refer to Error messages (p.67)

L-NET

The L-NET LED on the front panel displays the L-NET status.

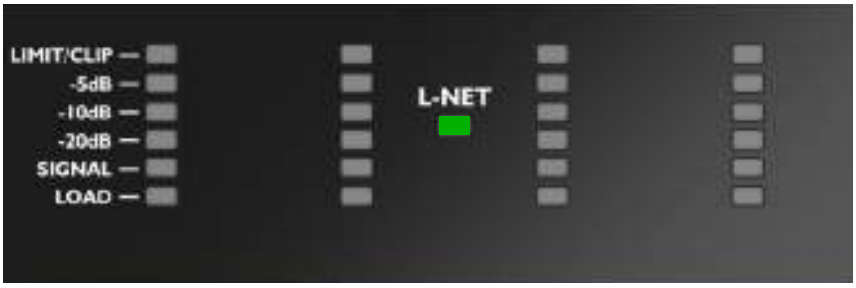

- green: when LA12X is remotely controlled by software such as LA Network Manager (refer to the **LA Network Manager** Help).
- off: when no software remotely controls the amplified controller.

The front panel commands remain accessible when the L-NET LED is lit.

Meters

The four LED meters (six LEDs each) display the state of the corresponding output channel.

LIMIT/CLIP	orange: the L-DRIVE limiter is activated with gain reduction of at least 3 dB red: the output voltage reaches the maximum level (signal clip)
-5dB	
-10dB	green: the output voltage reaches 5, 10 or 20 dB below the maximum level
-20dB	
SIGNAL	green: a signal is detected and the output voltage reaches 0.1 V
LOAD	green: a load is connected and the output module delivers a minimum of 0.8 A

OUT

The four OUT LEDs on the front panel display the mute status.

- white: when the corresponding output channel is muted
- off: when the corresponding output channel is unmuted

Main screen description

The amplified controller displays the main screen at the end of the startup sequence.

1. **low latency symbol:** indicates loaded preset is a low latency preset (refer to the **LA Network Manager** help)
2. **preset memory number (001 to 255):** memory space containing the current preset. The preset can be a user preset or come from the on-board preset library — refer to section LOAD PRESET (p.36)
3. **preset name:** as in the on-board preset library or as entered by the user (if stored in a user preset)
4. **R:** indicates the amplified controller is in AVB redundancy mode — refer to section NETWORK MODE (p.55)
5. **last number of the IP address (1 to 254):** identifies the controller within the L-NET network — refer to section ADDRESS (p.59)
6. **star sign:** indicates unsaved changes in the preset parameters — refer to section STORE PRESET (p.38)
7. **output name and input selection:** placed above the corresponding output key, written in the **xx_y** form, where:
   - **xx** indicates the type of transducer section or enclosure to be connected to the output channel:

     LF: low frequency transducer section, part of a 2 or 3-way loudspeaker enclosure
     MF: mid frequency transducer section, part of a 3-way loudspeaker enclosure
     HF: high frequency transducer section, part of a 2 or 3-way loudspeaker enclosure
     PA: passive loudspeaker enclosure
     SB: subwoofer enclosure with the front face towards the audience
     SR: subwoofer enclosure with the front face in the opposite direction from the audience (in a cardioid configuration)
   - **y** indicates the input selection of the output channel (input channel or input channels combination selected to drive the output channel) — refer to section PRESET PARAMETERS (p.39):

     A: IN A
     B: IN B
     A+: sum of IN A and IN B (A+B)
     A-: difference between IN A and IN B (A-B)
     C: IN C
     D: IN D
     C+: sum of IN C and IN D (C+D)
     C-: difference between IN C and IN D (C-D)
     X: sum of IN A, IN B, IN C and IN D (A+B+C+D)

Using quick access functions

Quick access functions are available directly from the main screen.

Locking/Unlocking the front panel

The front panel can be locked to prevent unintentional operations.

- To lock: press and hold simultaneously the ESC and OK keys until **Display Locked** is displayed.
- To unlock: press and hold simultaneously the ESC and OK keys until **Display Unlocked** is displayed

Muting/Unmuting an output channel

By default, all output channels are muted in all factory presets (the OUT LEDs are lit).

- To unmute an output channel: press the corresponding OUT key for less than 0.3 seconds.
- To mute an output channel: press the corresponding OUT key for less than 0.3 seconds.

The screen displays **MUTE OUT** and the mute status of each output channel for 2 seconds.

example: unmuting OUT1

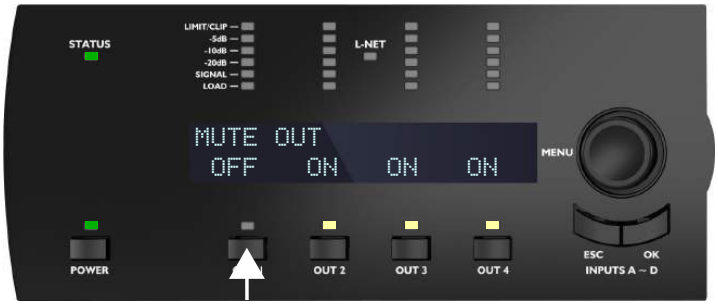

Gain can be set before unmuting.

Modifying gain

About this task

Gain can be modified for sets of output channels having input channels in common in their input selections.

Examples of output channels having input channels in common:

- The OUT1 key displays gain for OUT1, OUT3 and OUT4 (containing IN A)
- The OUT2 key displays gain for OUT2, OUT3 and OUT4 (containing IN B)
- The OUT3 and OUT4 keys display all channels (containing IN A and/or IN B)

For individual gain settings, refer to section PRESET PARAMETERS (p.39).

Procedure

1. Press and hold the OUT key of the corresponding output channel.
   The screen displays the gain values of all the output channels having an input channel in common.

   example with OUT3 displaying OUT3 and OUT4 (IN B)

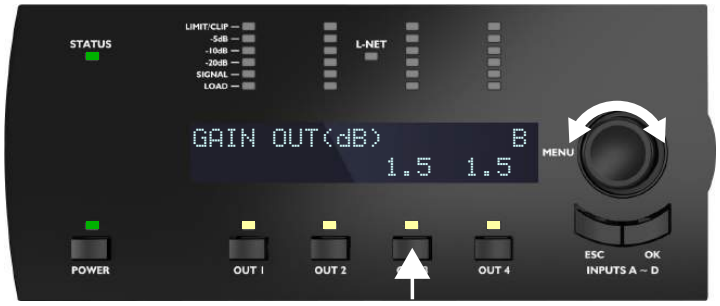

2. Turn the encoder wheel to modify the gain values.

   Turn the encoder wheel to modify gain by steps of 0.1 dB, or
   Press and turn simultaneously the encoder wheel to modify gain by steps of 1 dB.

3. Release the OUT key to return to the main screen.

Identifying an amplified controller

If the amplified controller is connected to the L-NET network, it can be identified among other amplified controllers on the Workspace of LA Network Manager (refer to the **LA Network Manager** Help).

To identify an amplified controller, press and hold the encoder wheel.

On the Workspace of LA Network Manager, the amplified controller blinks in yellow.

On the amplified controller, the L-NET and OUT LEDs flashes and the screen displays **IDENTIFICATION** and the complete IP.

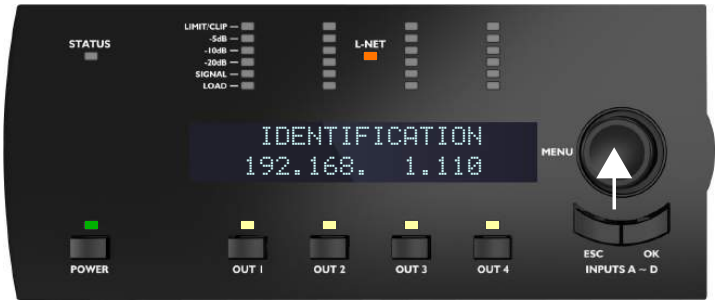

Displaying input level, input selection, input mode and group information

Press and hold the ESC or the OK key to display information about the input level, the input selection, the input mode and the group(s) the amplified controller is assigned to.

- The LED meters and the first line of the screen display information about input channels IN A, IN B, IN C and IN D respectively from left to right:
  - The SIGNAL to LIMIT/CLIP LEDs (1) indicate the level of the signal of the corresponding input channel.

    Input voltage values

    The SIGNAL LED is lit when the input voltage reaches -38 dBu (analog audio source) or -60 dBFS (digital audio source).

    The LIMIT/CLIP LED is lit when the input voltage reaches +22 dBu (analog audio source) or -0.1 dBFS (digital audio source).

    Reminder: -38 dBu = 10 mV, 22 dBu = 9.8 V.
  - The LOAD LED (2) is lit if the corresponding input channel is part of the input selection of at least one output channel.
  - The first line of the LCD screen (3) indicates the input mode and status of input channel pairs AB and CD. Brackets indicate Channel Sets — refer to PRESET PARAMETERS (p.39).
- The second line of the screen indicates the group names (if any) of output channels OUT1, OUT2, OUT3 and OUT4 respectively from left to right — refer to section CLEAR GROUP PARAMS (p.41). In case of multiple group assignations, the screen displays **mult_grp**.

For example, in the illustration:

- The signal of channel IN A has a level of -10 dB, the signal of channel IN B has a level of -20 dB and channels IN C and IN D receive no signal (1).
- Channels IN A and IN B are selected and channels IN C and IN D are not selected (2).
- The IN A/IN B pair receives an AES/EBU signal of 44.1 kHz and pair IN C / IN D is configured to receive ANALOG signals. Input mode cannot be different between IN A and IN B or between IN C and IN D (3).
- Channels OUT1 and OUT2 are assigned to the same set of groups, OUT3 is not assigned to any group, and OUT4 is assigned to group **All** (4).

Using the main menu

The main menu gives access to functions and submenus.

```
↓LOAD PRESET USER      ↔
 LOAD PRESET FACTORY
```

```
↕STORE PRESET          ↔
 DELETE PRESET
```

```
↕PRESET PARAMETERS     ↔
 CLEAR GROUP PARAMS
```

```
↕INPUT SETTINGS        ↔
 MONITORING & INFO
```

```
↕OPTIONS               ↔
 IP SETTINGS
```

The vertical arrows on the left indicate the current position in the menu:

- ↓ The page is the first in the menu.
  Turn the encoder wheel clockwise to display the other pages.
- ↕ The page is between the first and last in the menu.
  Turn the encoder wheel clockwise or counterclockwise to display the other pages.
- ↑ The page is the last in the menu.
  Turn the encoder wheel counterclockwise to display the other pages.

The horizontal arrows on the right indicate submenus availability:

- ↔ Indicates a submenu is available.
  Press the OK key or the encoder wheel to access it.
- ← No submenu is available.

Procedure

1. From the main screen, press and release the encoder wheel.
2. Turn the encoder wheel to select the page.
   A page is selected when it is displayed on the top line of the screen.
3. Press the OK key or the encoder wheel to enter the page.
   To return to the main screen, press the ESC key.

Main menu pages

LOAD PRESET (p.36)	load a user preset (from memories 1 to 10)
	load a factory preset (from memories 11 to 199)
STORE PRESET (p.38)	save the current preset (including current settings) as a user preset (in a memory from 1 to 10)
DELETE PRESET (p.39)	delete a user preset (in memory from 1 to 10)
PRESET PARAMETERS (p.39)	set parameters for gain, delay, polarity and input selection
CLEAR GROUP PARAMS (p.41)	remove the group parameters defined in LA Network Manager (name, gain, delay, and Contour EQ)
INPUT SETTINGS (p.42)	set the input mode, fallback mode and AES/EBU & AVB gain
MONITORING & INFO (p.50)	display real-time measured values: RMS output voltage, output temperature (in percentage of the maximum values) and mains voltage (min, max and average) display firmware and preset library versions and amplified controller's MAC address launch ENCLOSURE CHECK
OPTIONS (p.53)	set the amplified controller's delay unit, screen contrast, and operating modes (RSTP, network mode) reset audio parameters, or all parameters to factory settings
IP SETTINGS (p.58)	set the amplified controller's IP settings (IP address, subnet mask and gateway)

All parameters can also be selected from LA Network Manager. Refer to the **LA Network Manager** Help.

LOAD PRESET

A preset can be loaded from two pages:

page	memory range	contents
LOAD PRESET USER	1 to 10 (read and write)	User presets stored by user — refer to STORE PRESET (p.38)
LOAD PRESET FACTORY	11 to 199 (read only)	Factory preset library created by L-Acoustics and automatically installed during firmware update (refer to the **LA Network Manager** Help)

Example with a factory preset:

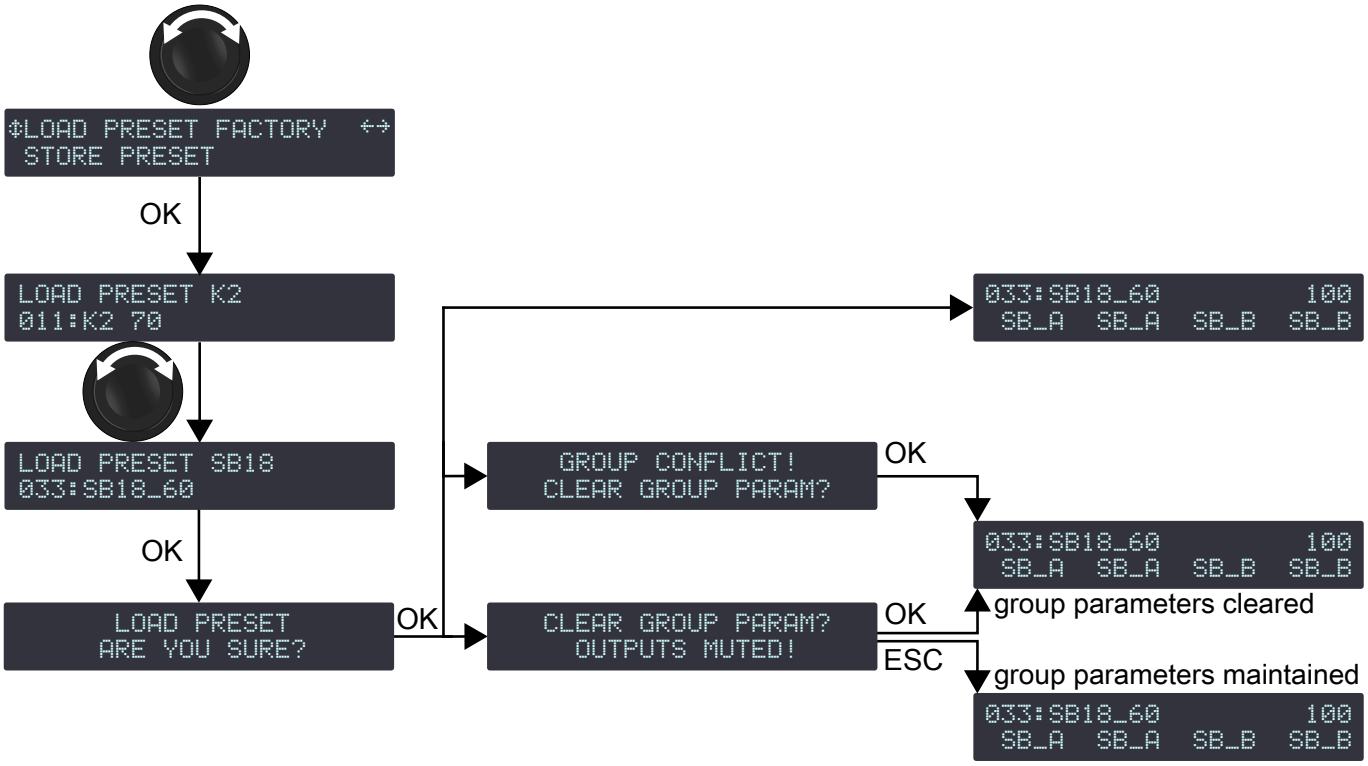

Procedure

1. From the main menu, select **LOAD PRESET USER** or **LOAD PRESET FACTORY**.

   When selecting **LOAD PRESET USER**, the amplified controller displays **NO PRESETS AVAILABLE!** when all user memories are empty.

   Press the ESC key to cancel.

2. Turn the encoder wheel and select the preset.

   The first line displays **LOAD PRESET** and the preset family name to help make a coarse selection.

   The second line displays the preset name to select within a family.

   If a user preset has a customized name, press and hold the encoder wheel to display the original name — refer to section STORE PRESET (p.38).

3. Press the OK key to load the selected preset.

   The amplified controller displays **ARE YOU SURE?**

4. Press the OK key or the encoder wheel to validate (or press the ESC key to cancel).
   - The amplified controller displays **CLEAR GROUP PARAM? OUTPUTS MUTED!** when it is assigned to groups and is no longer connected to the L-NET network.

     Either press the OK key to load the preset while clearing the group parameters
     Or press the ESC key to load the preset while maintaining the group parameters
   - The amplified controller displays **GROUP CONFLICT! CLEAR GROUP PARAM?** when it is assigned to groups and there is a group conflict. Loading the preset is only possible while clearing the group parameters.

     Either press the OK key to load the preset while clearing group parameters
     Or press the ESC key twice to cancel
   - The amplified controller displays **GROUP CONFLICT! CANNOT LOAD PRESET!** when it is assigned to groups and there is a group conflict, but it is not possible to clear the group parameters as the amplified controller is connected to the L-NET network.

     Press the ESC key twice to cancel.

Possible group conflicts:

The output channels are assigned to groups and the assignation structure is not compatible with the channel sets of the preset to be loaded.

Group parameters include enabled FIR filters (Zoom Factor, FIR1, FIR2, FIR3, FIR4, or Air Absorption Compensation) and the preset to be loaded is a low latency preset.

STORE PRESET

The currently loaded preset, including all modified settings, can be stored to a user memory (in memory location 1 to 10).

Unsaved modifications to the preset parameters are indicated by a star sign at the end of the first line.
Unsaved modifications are lost if the preset is reloaded prior to storing.
However, the current state of a loaded preset is saved when the amplified controller is turned off.

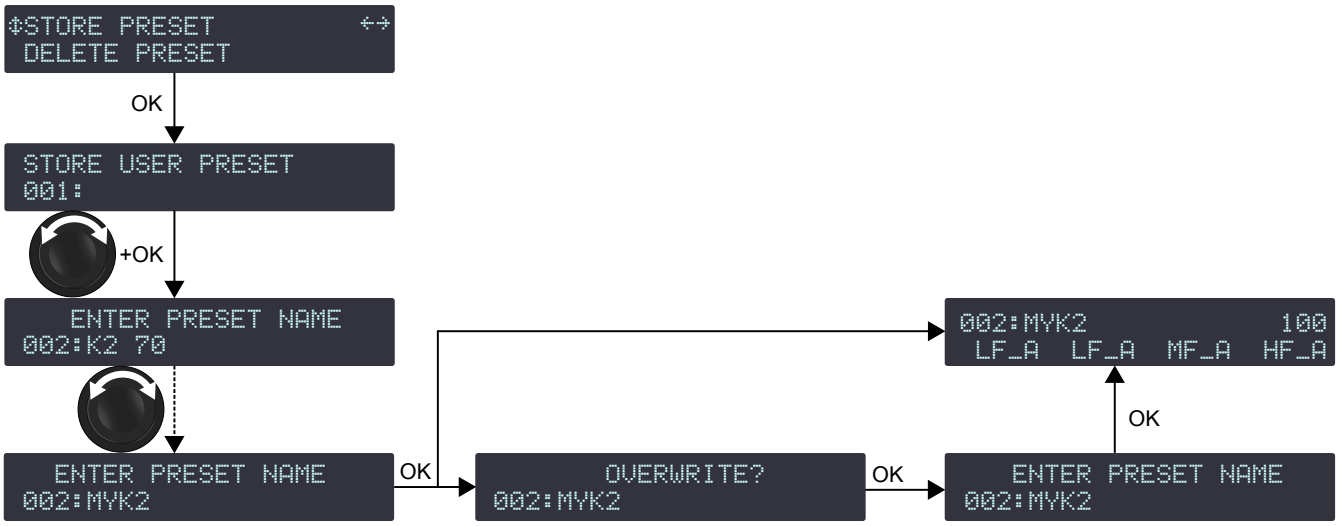

Procedure

1. From the main menu, select **STORE PRESET**.
2. Turn the encoder wheel and select the user memory space.
3. Press the OK key or the encoder wheel to validate.
4. If necessary, enter a user preset name (16 characters max):
   a) Turn the encoder wheel to select the first character.
   b) Press the encoder wheel to set the cursor on the second character.
   c) Repeat until all characters are entered.

   Pressing the encoder wheel after the 16th character sets the cursor back to the first character.
5. Press the OK key to validate the name.

   The controller displays **OVERWRITE?**, when the selected memory space is not empty.
   Press the OK key to overwrite (or the ESC key to cancel).

DELETE PRESET

A user preset stored in a user memory (in memory range 1 to 10) can be deleted.

Procedure

1. From the main menu, select **DELETE PRESET**.

   The amplified controller displays **NO PRESETS AVAILABLE!** when all user memories are empty.
   Press the ESC key to cancel.
2. Turn the encoder wheel to select the user memory space.
3. Press the OK key or the encoder wheel to validate.

   The amplified controller displays **CANNOT DELETE THE CURRENT PRESET**, when the selected preset is the currently loaded preset. It is not possible to delete the currently loaded preset.
   Press the ESC key to cancel.

   The amplified controller displays **ARE YOU SURE?**.
4. Press the OK key or the encoder wheel to validate (or press the ESC key to cancel).

PRESET PARAMETERS

The preset parameters include gain, delay, polarity and input selection.

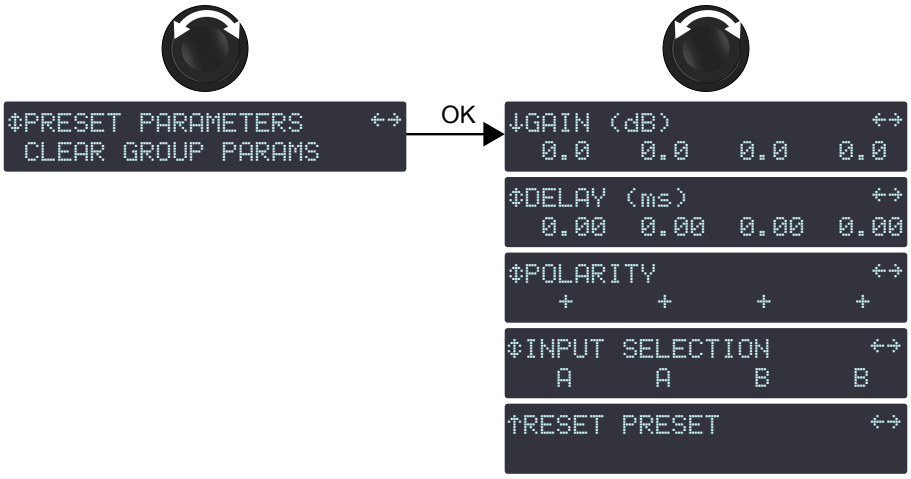

Gain and delay value ranges

Gain is adjustable from -60 dB to +15 dB.

Delay is adjustable from 0 to 1000 ms — see also section DELAY UNIT (p.53).

Total delay

The total delay includes all group delays (set in LA Network Manager) and the output channel delay. Total delay cannot exceed 1000 ms.

The parameters of the currently loaded preset can be set individually for each output channel or channel set.

Channel set

In certain presets, some channels are interdependent and form a channel set.

Within a channel set the preset parameters are common to all channels.

On the amplified controller's screen, channel sets are indicated by brackets above the corresponding output channel keys.

Two 2-channel sets (LF/HF - LF/HF)

One 4-channel sets (LF/LF/MF/HF)

Setting the preset parameters

for gain and delay

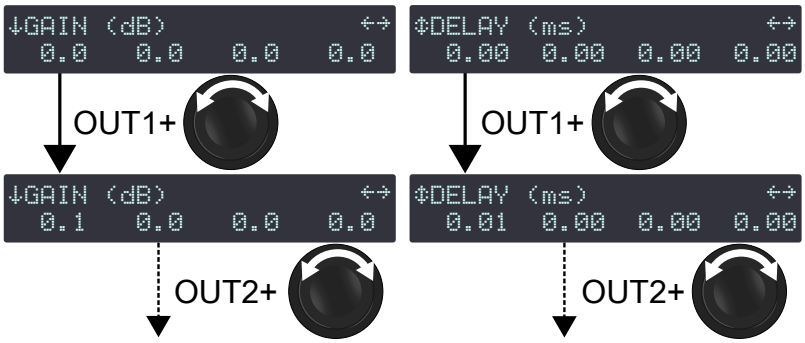

for polarity and input

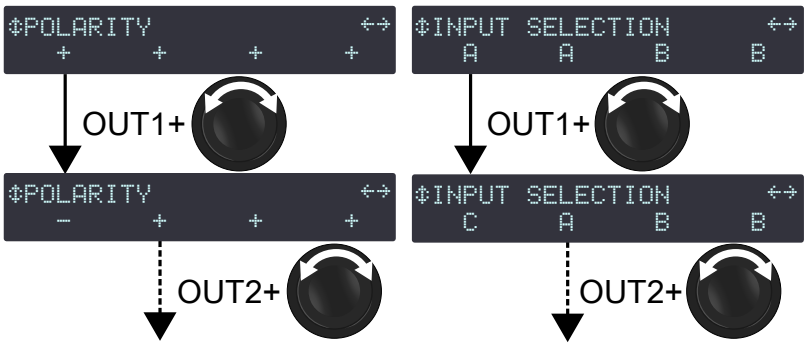

Procedure

1. From the main menu, select **PRESET PARAMETERS**.
2. Turn the encoder wheel to select a preset parameter (**GAIN (dB)**, **DELAY (ms)**, **POLARITY** or **INPUT SELECTION**).
3. Press and hold the output key of an output channel or one of the output keys of a channel set to select it.
4. Turn the encoder wheel to select the value.

   Gain and delay value setting
   Turn the encoder wheel for fine resolution (last digit).
   Press and turn the encoder wheel for coarse resolution (second to last digit).
5. Release the output key.
6. Repeat steps 3 to 5 for each output channel or channel set.
7. Repeat steps 2 to 5 for each preset parameters.

   Preset parameter modifications apply immediately.

   Saving preset parameters
   Preset parameter modifications are not automatically saved and are lost if the preset is reloaded.
   Refer to STORE PRESET (p.38).

Resetting the preset parameters

All preset parameters (including preset name) can be reset to the default values.

Procedure

1. From the main menu, select **PRESET PARAMETERS**.
2. Turn the encoder wheel to select **RESET PRESET**.
3. Press the OK key or the encoder wheel to validate.
   The amplified controller displays **ARE YOU SURE? OUTPUTS MUTED!**.
4. Press the OK key or the encoder wheel to validate (or the ESC key to cancel).

   Resetting the parameters of a user preset (stored in memory space 001 to 010) only affects the current parameters.

   To reset the parameters of a stored preset, overwrite the memory space after resetting the preset. Refer to STORE PRESET (p.38).

CLEAR GROUP PARAMS

Group parameters (names, gains, delays, contour EQs) are defined in LA Network Manager and cannot be accessed from the amplified controller. They remain active when the amplified controller is disconnected from the computer running LA Network Manager (in standalone mode), and when the amplified controller is shut down or restarted. Group parameters are not preset-dependent and remain active when a different preset is loaded.

Therefore, L-Acoustics recommends to clear group parameters when an amplified controller is used in standalone mode after being used within a network.

To verify if output channels are assigned to a group, refer to Displaying input level, input selection, input mode and group information (p.34).

CLEAR GROUP PARAMS does not clear the preset parameters. Refer to PRESET PARAMETERS (p.39)

clearing the group parameters

Procedure

1. From the main menu, select **CLEAR GROUP PARAMS**.

   The amplified controller displays **L-NET ACTIVE. CANNOT CLEAR** when the amplified controller is connected to the L-NET network. Group parameters cannot be cleared when the amplified controller is remotely controlled by LA Network Manager.

   Press the ESC key to cancel.

   The amplified controller displays **NO GROUP DEFINED. CANNOT CLEAR** when the amplified controller is not assigned to any group.

   Press the ESC key to cancel.
2. Press the OK key or the encoder wheel to validate.
   The amplified controller displays **ARE YOU SURE? OUTPUTS MUTED!**.
3. Press the OK key or the encoder wheel to validate (or press the ESC key to cancel).

INPUT SETTINGS

The INPUT SETTINGS menu gives access to settings of the input mode, the fallback modes and the AES/EBU & AVB gain.

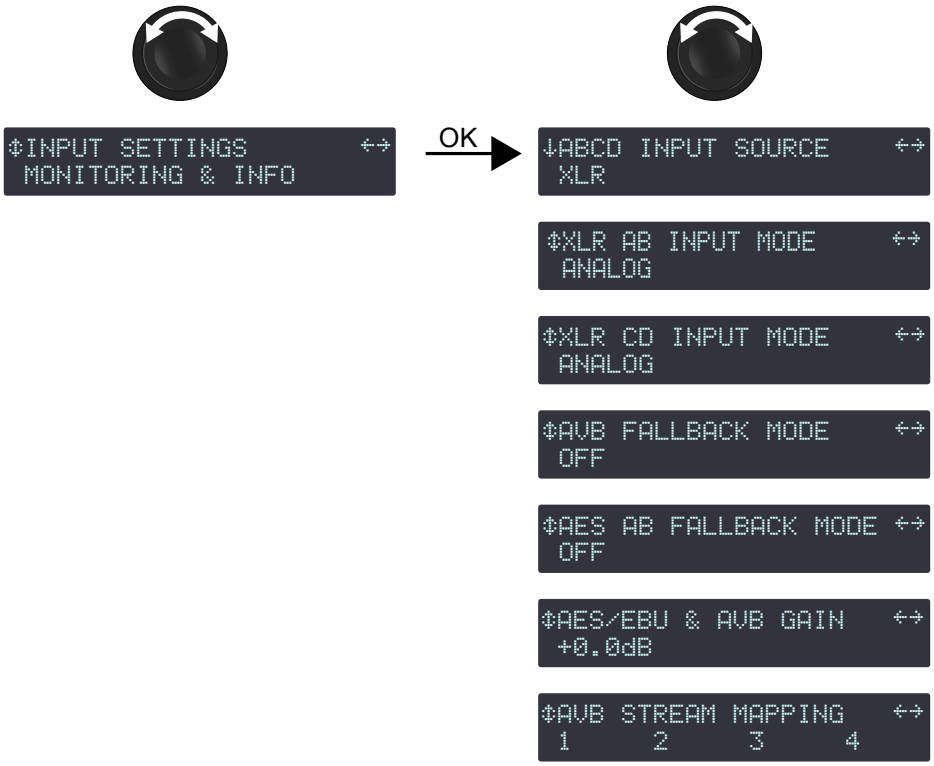

ABCD INPUT SOURCE

LA12X amplified controllers can retrieve four channels from an AVB stream containing up to eight channels, at 48 kHz or 96 kHz, connected by one of the two 1 Gb/s Ethernet ports.

In redondant mode, LA12X amplified controllers can retrieve the channels from the stream coming from the Primary network connected to Ethernet port 1, or from the stream coming from the Secondary network connected to Ethernet port 2. Refer to NETWORK MODE (p.55).

Use **ABCD INPUT SOURCE** to select between XLR or AVB input sources for all channels.

selecting the input source

Procedure

1. From the main menu, select **INPUT SETTINGS**.
2. Press the OK key or the encoder wheel to validate.
3. Turn the encoder wheel to select **ABCD INPUT SOURCE**.
4. Press the OK key or the encoder wheel to validate.
5. Turn the encoder wheel to select the input source (**XLR** or **AVB**).
6. Press the OK key or the encoder wheel to validate.

AVB status

Possible statuses when AVB is enabled:

IDLE	The unit is not connected to any talker. If unexpected, possible cause is that an AVB controller requested a disconnection. To resolve, connect an AVB controller and use it to connect the unit to a talker.
WAITING TLKR / WAIT TLKR / WTLK	The listener has been told by an AVB controller to connect to a talker and it is now waiting for the talker to be online. If displayed for more than a few seconds: • Check the network for a disconnected cable. • Check that the talker is in working order (fully booted).
CONNECTING / CING	Temporary status while the listener waits for the talker to send information about the stream.
CON TIMEOUT / CTMO	Timeout has been reached while the listener waits for the talker to send information about the stream. Check that there are no issue on the network such as firewall parameters or Wi-Fi access points.
CONNECTION ERROR / CON ERROR / CERR and error code	While the listener waited for the talker to send information about the stream, the talker reported an issue. Refer to the Appendix C - List of AVB connection (CON) errors (p.89).
WAITING RSV / WAIT RSV / WRSV	The listener is waiting for the conclusion of the bandwidth reservation from the talker.
RESERVATION ERROR / RSV ERROR / RERR and error code	The bandwidth reservation has failed. It can also be temporarily displayed when a network cable is disconnected then reconnected. Refer to the Appendix B - List of AVB reservation (RSV) errors (p.87).
WAITING START / WAIT START / WSRT	The bandwidth is reserved but the unit has received a "stop streaming" command by the AVB controller: Try disconnecting and reconnecting the stream.
WAITING DATA / WAIT DATA / WDAT	Waiting for the talker to transmit the stream. If displayed for more than a few seconds, possible causes are: • Talker is physically disconnected or off: check the talker. • A "stop streaming" command has been sent to the talker from a third-party AVB controller: Try disconnecting and reconnecting the stream.
DATA ERROR / DERR	The listener is receiving the stream from the talker but the format is not as announced by the AVB controller. Check that the controller is sending the correct information.
VALIDATING / VLDT	The listener is receiving the stream from the talker, the stream has the correct format and the listener is verifying the validity of the time synchronization information from the stream before processing it. If displayed for more than a few seconds, check the number of hops in the network cabling.
READY and the sampling frequency	Processing of audio is suspended. Possible causes are: The input source on the amplified controller is selected as XLR or FBACK XLR. Select AVB to set the media clock.
WAITING MCLK / WAIT MCLK / WMCK	The listener cannot process audio from this stream because the currently selected media clock source is not providing a valid clock. Possible cause is: Non-Avnu certified devices on the network are disrupting the media clock synchronization. Preferably use Avnu-certified devices.

LOCKED / LCK and the sampling frequency	Processing audio stream data.

Reverting from AVB fallback

When the READY status is recovered on the AVB input, reverting to the initial input mode is manual.

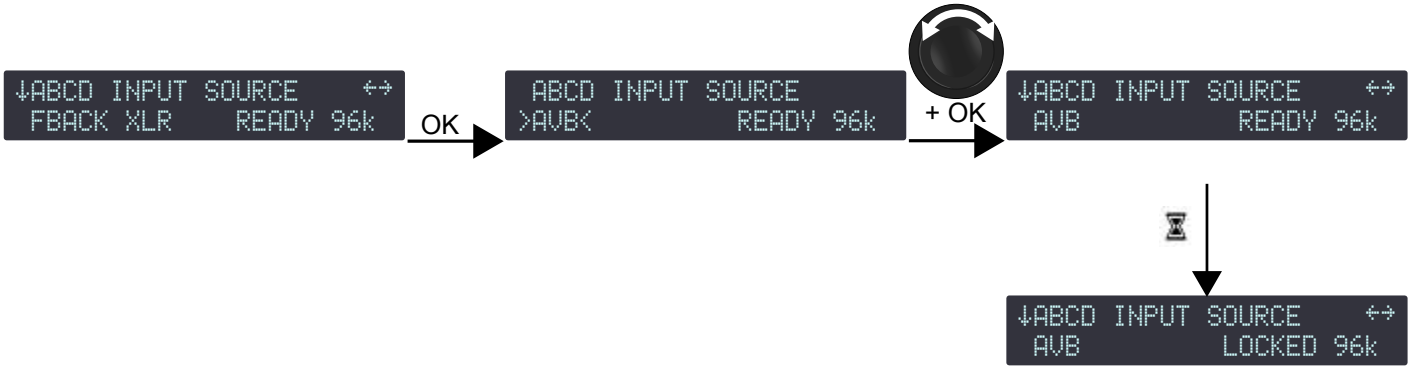

Procedure

1. From the **ABCD INPUT SOURCE** menu, press the OK key.
2. Turn the encoder wheel to select the input mode.
3. Press the OK key or the encoder wheel to validate.

XLR INPUT MODE

The XLR connectors of the signal panel can receive analog or digital signals. Use **XLR INPUT MODE** to select the type of signal, depending on the type of connected audio sources, for channel pairs AB and CD.

The input mode selection can be different between channel pairs AB and channel pairs CD, but it cannot be different between input channel A and input channel B, or between input channel C and input channel D.

selecting the XLR input mode

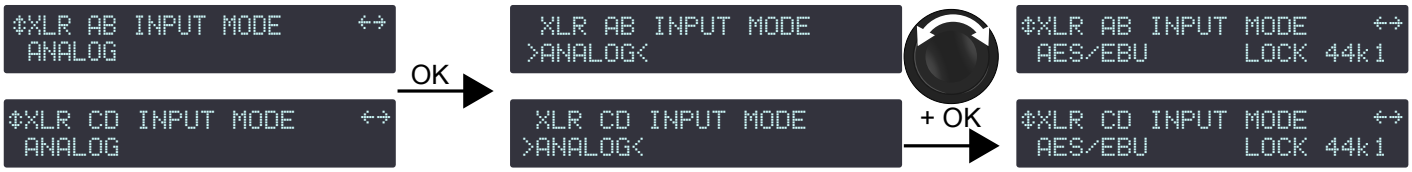

Procedure

1. From the main menu, select **INPUT SETTINGS**.
2. Press the OK key or the encoder wheel to validate.
3. Turn the encoder wheel to select **XLR AB INPUT MODE** or **XLR CD INPUT MODE**.
4. Press the OK key or the encoder wheel to validate.
5. Turn the encoder wheel to select between the input modes (**ANALOG** for analog audio source, **AES/EBU** for digital audio source).
6. Press the OK key or the encoder wheel to validate.
7. Repeat steps 3 to 6 for the other channel pair.

AES/EBU signal status

When AES/EBU is enabled, the status of the signals is displayed:

LOCKED and the sampling frequency	Indicates a digital audio source is connected to the AES/EBU input, the signal delivered by the source has a format supported by the controller's digital audio board, and no loss or fault is being detected during data transfer. For example, LOCKED 44k1 indicates the digital audio source provides signals of sampling frequency of 44.1 kHz.
LOCKED-WARN	Indicates the incoming digital signal has a sampling frequency that is out of the nominal range, but it does not lead to loss of audio.
UNLOCKED	Indicates the incoming digital signal is faulty and leads to loss of audio. If the fallback mode is active, UNLOCKED on channel pair AB automatically switches to channel pair CD. FALLBACK(CD) and the status of the signal on channel pair AB is displayed. Refer to section AES AB FALLBACK MODE (p.47). The LOCKED status is re-acquired after at least 500 ms of stability.
INVALID	Indicates non-audio data in the payload or errors in the AES/EBU transmission.

```
↓INPUT MODE AB        ↔
 AES/EBU    LOCKED 44k1
```

```
↓INPUT MODE AB        ↔
 AES/EBU    LOCKED-WARN
```

```
↓INPUT MODE AB        ↔
 AES/EBU       UNLOCKED
```

```
↓INPUT MODE AB        ↔
 AES/EBU        INVALID
```

```
↓INPUT MODE AB        ↔
 FALLBACK(CD)LOCKED 44k1
```

```
↓INPUT MODE AB        ↔
 FALLBACK(CD)LOCKED-WARN
```

```
↓INPUT MODE AB        ↔
 FALLBACK(CD)   UNLOCKED
```

```
↓INPUT MODE AB        ↔
 FALLBACK(CD)   INVALID
```

Reverting from AES AB fallback

When the LOCKED status is recovered on channel pair AB, reverting to the initial input mode is manual.

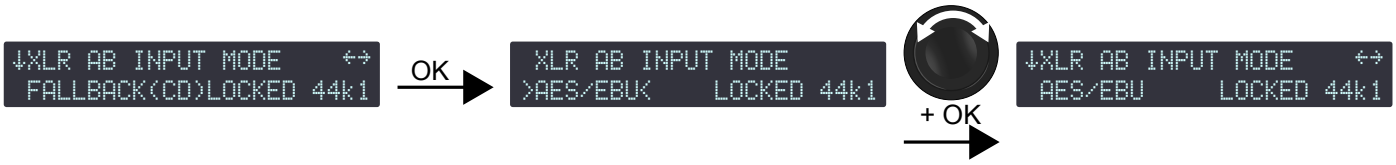

Procedure

1. From the **XLR AB INPUT MODE** menu, press the OK key.
2. Turn the encoder wheel to select the input mode.
3. Press the OK key or the encoder wheel to validate.

AVB FALLBACK MODE

Sound cuts in case of failure of the AVB input source can be avoided with the AVB fallback option.

When the automatic fallback is on (**AVB > XLR**), the amplified controller automatically switches to the XLR input sources in case of loss of the LOCKED status on the AVB stream.

Possible causes for the loss of the "locked" status:

- Switch or talker failure (rebooted, turned off, unplugged...).
- Cable failures.
- Disconnection or "stop streaming" requested by the AVB Controller.
- Non-Avnu certified device in the network.

Reverting to the AVB input source when the signal returns to a normal state is manual — refer to INPUT MODE (p.44). It can also be done simultaneously for all amplified controllers in LA Network Manager.

When automatic fallback is disabled (OFF), sound is cut off in case of loss of the LOCKED status, but sound is automatically recovered when the signal returns to a normal state.

Procedure

Precautions to avoid sound cuts or level differences upon fallback

The XLR inputs must be connected to an audio source (analog or digital) playing the same program as the AVB audio source.

When an analog source is connected to the XLR inputs, the level of the AVB audio source must be aligned to the level of the analog audio source using AVB & AES/EBU GAIN — refer to section AES/EBU & AVB GAIN (p.47).

Fallback and time-alignment

The propagation time of the AVB signal distribution is likely to be longer than the propagation time of the AES/EBU or ANALOG redundant signal distribution. In this case, if some Units in the system switch to AVB fallback, but not other Units, parts of the system are no longer time-aligned.

It is highly recommended to adopt network topologies and a system deployment that minimize these risks, and to use the Trigger Fallback button in LA Network Manager on Units that did not switch over in order to re-align the system until the initial cause of the problem is found and resolved.

If the connected signal source comes from a P1, enable the time-alignment option in LA Network Manager to solve the issue.

1. From the main menu, select **INPUT SETTINGS**.
2. Press the OK key or the encoder wheel to validate.
3. Turn the encoder wheel to select **AVB FALLBACK MODE**.
4. Press the OK key or the encoder wheel to validate.
5. Turn the encoder wheel to select the setting (**ON** or **AVB > XLR**).
6. Press the OK key or the encoder wheel to validate.

AES AB FALLBACK MODE

Sound cuts in case of digital signal failure on input pair AB can be avoided with the fallback option.

When automatic fallback is enabled (ON), the amplified controller automatically switches to input pair CD in case of digital signal failure on input pair AB.

The switchover conditions are:

- No clock
- Loss of lock
- CRC error
- Bipolar encoding error
- Data slip

Validity bit (invalid audio) value does not trigger a fallback.
Instead the signal is muted.

Reverting to input pair AB when the digital signal returns to a normal state is manual — refer to INPUT MODE (p.45). It can also be done simultaneously for all amplified controllers in LA Network Manager.

When automatic fallback is disabled (OFF), sound is cut off in case of digital signal failure on input pair AB, but sound is automatically recovered when the signal returns to a normal state.

Enabling the AES AB fallback mode

Procedure

Precautions to avoid sound cuts or level differences upon fallback

Input pair CD must be connected to an audio source (analog or digital) playing the same program as the digital audio source connected to input pair AB.

When an analog audio source is connected to input pair CD, the level of the digital audio source connected to input pair AB must be aligned to the level of the analog audio source using AES/EBU GAIN — refer to section AES/EBU & AVB GAIN (p.47).

1. From the main menu, select **INPUT SETTINGS**.
2. Press the OK key or the encoder wheel to validate.
3. Turn the encoder wheel to select **FALLBACK MODE**.
4. Press the OK key or the encoder wheel to validate.
5. Turn the encoder wheel to select the setting (**ON** or **OFF**).
6. Press the OK key or the encoder wheel to validate.

AES/EBU & AVB GAIN

AES/EBU & AVB GAIN must be used when:

- the AES AB fallback mode is enabled
- and/or the AVB fallback mode is enabled
- and the fallback input is an analog audio source

This gain allows aligning the digital and/or AVB audio source level to the analog level for a seamless fallback switch — refer to section AES AB FALLBACK MODE (p.47) and AVB FALLBACK MODE (p.46). It can be set from -12 dB to +12 dB by steps of 0.1 dB.

This gain must be set according to the analog audio source's calibration (based on manufacturer's specs or user measurements) and the amplified controller's analog inputs calibration (0 dBFS for an input signal of +22 dBu). These examples illustrate the most common cases:

analog audio source calibration	AES/EBU & AVB gain
+18 dBu for 0 dBFS	- 4 dB
+24 dBu for 0 dBFS	+ 2 dB
+22 dBu for 0 dBFS or, if fallback is disabled or, if the fallback input is a digital audio source	+ 0 dB

Procedure

1. From the main menu, select **INPUT SETTINGS**.
2. Press the OK key or the encoder wheel to validate.
3. Turn the encoder wheel to select **AES/EBU & AVB GAIN**.
4. Press and hold the ESC, OK or OUT1 key.
5. Turn the encoder wheel to select an input value.
   Setting applies in real-time.

   Turn the encoder wheel for steps of 0.1 dB.
   Press and turn the encoder wheel for steps of 1 dB.
6. Release the key.

AVB STREAM MAPPING

LA12X amplified controllers can retrieve four channels from an AVB stream containing up to eight channels.

Use AVB STREAM MAPPING to select the channel numbers to be retrieved for each input channel.

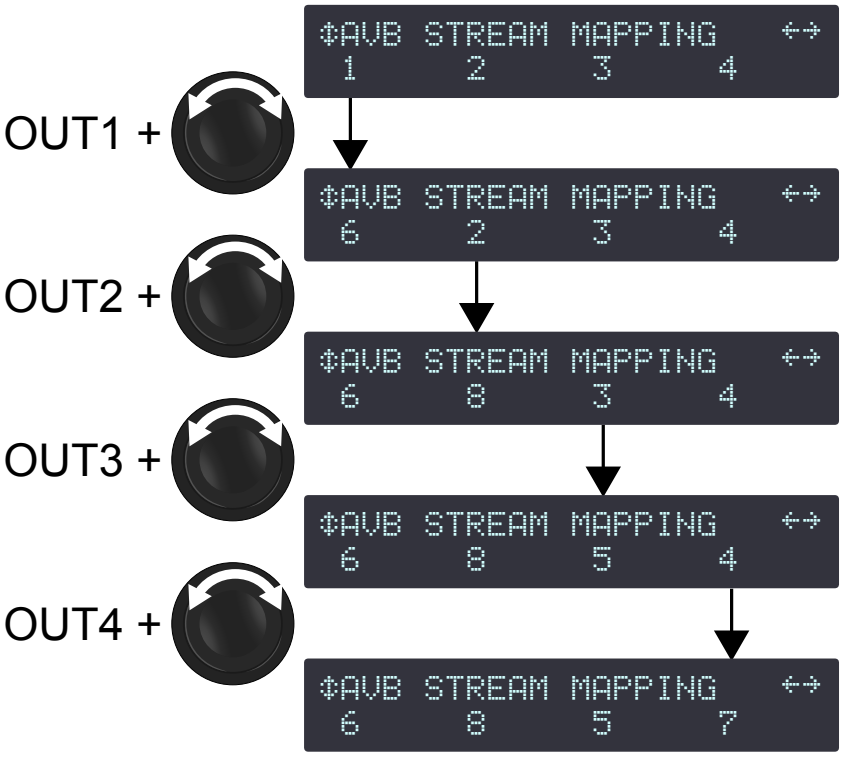

Procedure

1. From the main menu, select **INPUT SETTINGS**.
2. Press the OK key or the encoder wheel to validate.
3. Turn the encoder wheel to select **AVB STREAM MAPPING**.
4. Press and hold the OUT1 key.
5. Turn the encoder wheel to select the channel number.
6. Release the OUT1 key.
7. Repeat step 4 to 6 with the OUT2, OUT3 and OUT4 keys.

MONITORING & INFO

The MONITORING & INFO menu provides real-time measurements and information on the amplified controller:

- For each output channel:
  - real-time RMS output voltage (in percentage of the maximum value supported by the connected transducer section)
  - output temperature (in percentage of the operating range)
- Voltages of the connected power supply.
- Ethernet ports current status.
- Version numbers of the amplified controller onboard firmware and preset library.
- Amplified controller's MAC address and hardware version.
- The ENCLOSURE CHECK function.

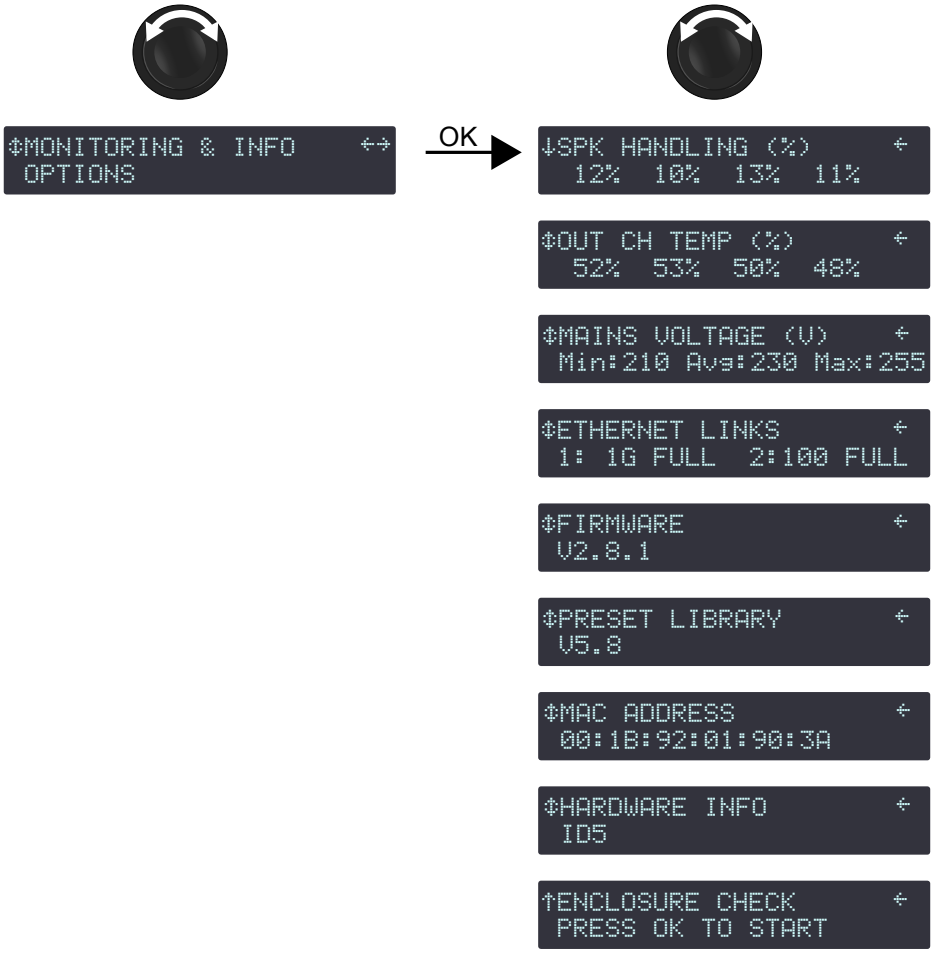

SPK HANDLING (%)

SPK HANDLING (%) (speaker handling) displays the RMS voltage measured at each individual amplifier circuit output as a percentage of the maximum voltage supported by the connected speaker section.

```
↓SPK HANDLING (%)      ←
  12%  10%  13%  11%
```

For example in this illustration, the RMS voltage of channels OUT 1 to OUT 4 is respectively 12, 10, 13, and 11% of the maximum values.

OUT CH TEMP (%)

OUT CH TEMP (%) (output channel temperature) displays the temperature measured at each individual amplifier circuit output as a percentage of the maximum operating temperature supported by the amplified controller: 90° C / 194° F = 100%.

```
↕OUT CH TEMP (%)       ←
  52%  53%  50%  48%
```

For example in this illustration, the temperature of channels OUT 1 to OUT 4 is respectively 52, 53, 50, and 48% of the maximum values.

Refer to Error messages (p.67) for information on the temperature-related messages.

MAINS VOLTAGE (V)

MAINS VOLTAGE (V) displays the minimum (Min), average (Avg) and maximum (Max) voltage of the connected power supply, measured over the past 1.5 seconds, to help visualize if the power supply is undersized or if drops in voltage are occurring.

Ideally, the average value should correspond to the power supply nominal voltage, and minimum and maximum values should not exceed ± 10% of the nominal voltage.

```
↕MAINS VOLTAGE (V)     ←
 Min:210 Avg:230 Max:255
```

For example, in this illustration, the average is 230 V, minimum is 210 V, and maximum is 255 V.

To reset the measurement, press the OK key.

Refer to Error messages (p.67) for information on the power supply related messages.

ETHERNET LINKS

ETHERNET LINKS displays the current status of the link of each Ethernet port.

The status includes, for each port:

- the Ethernet link speed: 10M (for 10 Mbits/s), 100 (for 100 Mbits/s) or 1G (for 1 Gbits/s)
- the communication mode: HALF (for half-duplex) or FULL (for full-duplex)

If no connection has been established, the displayed status is DOWN.

Possible causes: no cable connected to the port, faulty cable connected to the port, cable connected to the port but no device connected at the other end of the cable, port failure.

```
↕ETHERNET LINKS        ←
 1: 1G FULL  2:100 FULL
```

For example, in this illustration, port 1 has a speed of 1 Gbits/s, port 2 has a speed of 100 Mbits/s, and both are in full-duplex mode.

FIRMWARE

FIRMWARE displays the version number of the amplified controller onboard firmware.

Press the encoder wheel to display the fourth digit and the build date (in the YYYYMMDD format).

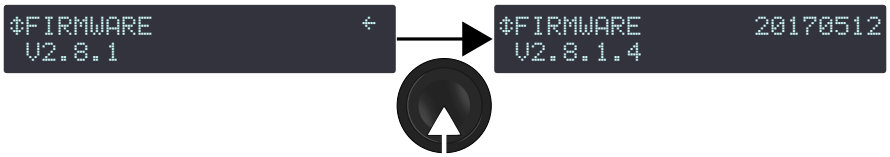

Network
Always ensure that all LA12X amplified controllers used in a given network run the same firmware version.

PRESET LIBRARY

PRESET LIBRARY displays the version number of the amplified controller onboard preset library.

Press the encoder wheel to display the third digit.

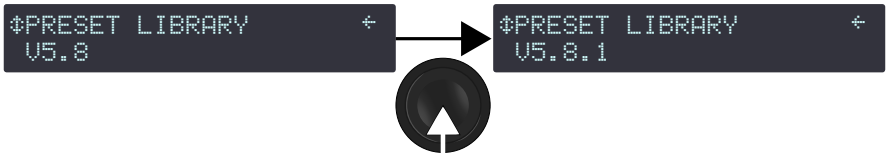

Refer to the **Preset Guide** for the full description of the factory preset library.

MAC ADDRESS

MAC ADDRESS displays the MAC (Media Access Control) address of the amplified controller. This address is unique to each amplified controller and is the equivalent of an international identification serial number. It is set by the manufacturer and cannot be modified.

For example, in this illustration, the MAC address is 00:1B:92:01:90:3A.

HARDWARE INFO

HARDWARE INFO displays the version of the hardware in use in the amplified controller.

For troubleshooting purposes, it can be useful to communicate this number to the L-Acoustics representative.

For example, in this illustration, the hardware has ID5.

ENCLOSURE CHECK

ENCLOSURE CHECK is a preliminary diagnosis tool for the loudspeaker enclosures connected to the amplified controller.

Refer to the **Enclosure Check** technical bulletin for the full procedure.

OPTIONS

The OPTIONS menu gives access to the amplified controller general settings:

- delay unit (ms, meters, feet or samples)
- LCD screen contrast
- LED and screen backlight mode
- spanning tree
- network mode
- reset audio configuration
- reset to default factory settings

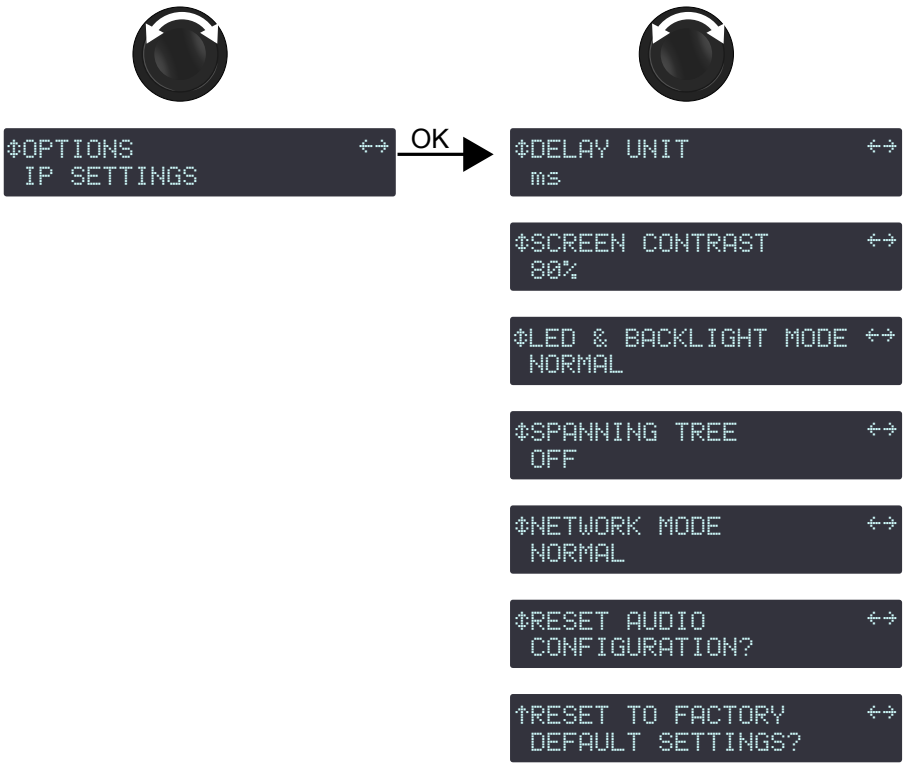

DELAY UNIT

Delay values can be displayed in ms (milliseconds), meters, feet or samples. The values in meters and feet are given for a temperature of 20° C / 68° F.

Procedure

1. From the main menu, select **OPTIONS**.
2. Press the OK key or the encoder wheel to validate.
3. Turn the encoder wheel to select **DELAY UNIT**.
4. Press the OK key or the encoder wheel to validate.
5. Turn the encoder wheel to select the value.

SCREEN CONTRAST

The LCD screen contrast can be modified to adapt to a very bright or very dark environment.

Procedure

1. From the main menu, select **OPTIONS**.
2. Press the OK key or the encoder wheel to validate.
3. Turn the encoder wheel to select **SCREEN CONTRAST**.
4. Press the OK key or the encoder wheel to validate.
5. Turn the encoder wheel to select the value.
6. Press the OK key or the encoder wheel to validate.

LED & BACKLIGHT MODE

The brightness of the LED and the LCD screen backlight can be modified to adapt to a very bright or very dark environment.

Procedure

1. From the main menu, select **OPTIONS**.
2. Press the OK key or the encoder wheel to validate.
3. Turn the encoder wheel to select **LED & BACKLIGHT MODE**.
4. Press the OK key or the encoder wheel to validate.
5. Turn the encoder wheel to select the value (**OFF**, **LOW**, **MEDIUM**, **NORMAL** or **SUNLIGHT**).
6. Press the OK key or the encoder wheel to validate.

SPANNING TREE

When SPANNING TREE is ON, the Rapid Spanning Tree Protocol (RSTP) is used to detect and automatically disable Ethernet ports to cut loops created by redondant links in the network, and avoid damaging broacast storms.

In case of a cable or switch failure in the network, the protocol can re-enable these ports to restore connectivity.

Enable RSTP if the amplified controller is part of a network loop. Disable RSTP if there is no risk of the amplified controller being part of a network loop.

Procedure

1. From the main menu, select **OPTIONS**.
2. Press the OK key or the encoder wheel to validate.
3. Turn the encoder wheel to select **SPANNING TREE**.
4. Press the OK key or the encoder wheel to validate.
5. Turn the encoder wheel to select the setting (**ON** or **OFF**).
6. Press the OK key or the encoder wheel to validate.

NETWORK MODE

The network mode can be selected as **normal** or **redundancy**.

In normal mode:

- The amplified controller has a single IP address.
- Each Ethernet port can be used indifferently to connect to the network.
- It is possible to daisy-chain amplified controllers. An AVB domain can contain up to 12 daisy-chained units (including any L-Acoustics P1).

In redundancy mode:

- The amplified controller has two IP addresses, one for the Primary network, one for the Secondary network.
- Ethernet port 1 is dedicated to the Primary network, Ethernet port 2 is dedicated to the Secondary network.
- It is no longer possible to daisy-chain amplified controllers. L-Acoustics LS10 or other AVB switches are necessary to create a redundant AVB domain.

Using the redundancy mode reduces the risk of network failure: in case of failure of the Primary network, the signal of the Secondary network is automatically and seamlessly picked up and used as a replacement. When the Primary network is up and running again, it is automatically used again, seamlessly, with no user intervention.

For more information on cabling, topology, and IP addresses considerations for AVB redondant networks, refer to the **LA Network Manager** Help in **User guide** > **General** > **L-NET and AVB network setup**.

Risk of broadcast storm.

To enable the redundancy mode: connect the Primary network cables in a star topology, and first change the mode, then connect the Secondary network cables.

To disable the redundancy mode: always disconnect the Secondary network cables first, then change the mode.

Changing network mode requires rebooting the amplified controller.

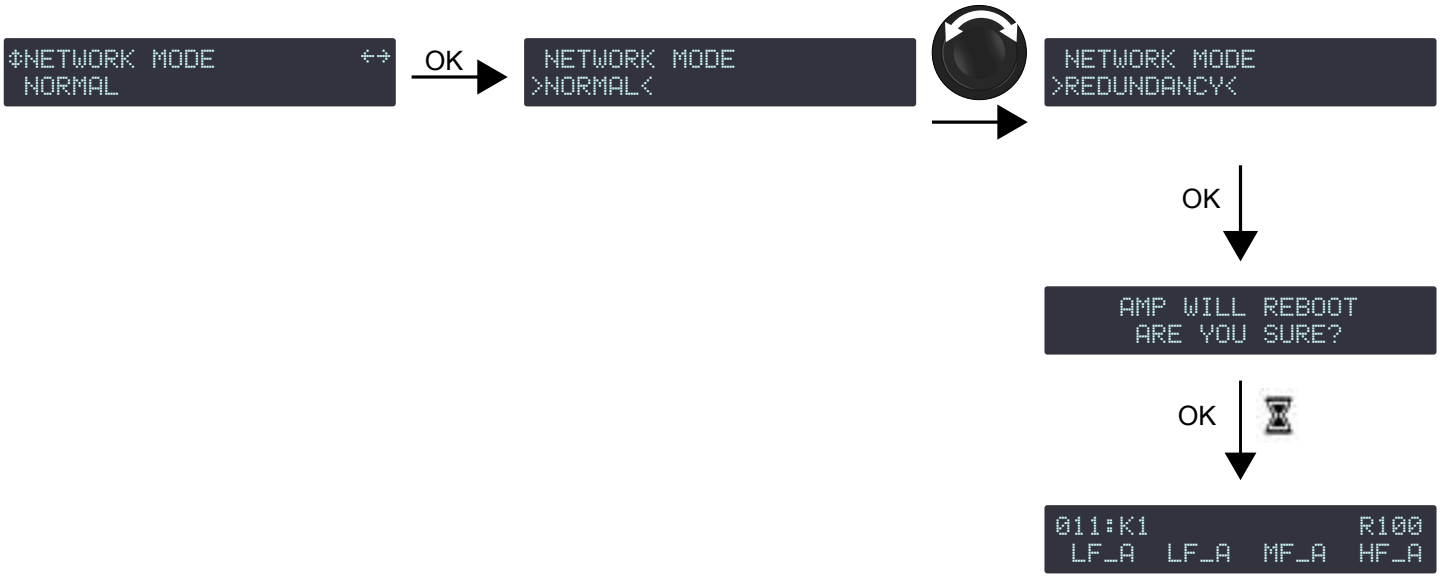

Procedure

1. From the main menu, select **OPTIONS**.
2. Press the OK key or the encoder wheel to validate.
3. Turn the encoder wheel to select **NETWORK MODE**.
4. Press the OK key or the encoder wheel to validate.
5. Turn the encoder wheel to select **NORMAL** or **REDUNDANCY**.

   The amplified controller displays **ARE YOU SURE?**.
6. Press the OK key or the encoder wheel to validate (or press the ESC key to cancel).

   The amplified controller reboots.

   The main screen displays an **R** to indicate the amplified controller is in redondancy mode.

What to do next

Set up the two IP addresses, one for each network.

```
↕ADDRESS (PRIMARY)     ↔
  192 . 168 .   1 . 100
```

```
↕ADDRESS (SECONDARY)   ↔
  192 . 168 .   2 . 100
```

Refer to IP SETTINGS (p.58).

RESET AUDIO CONFIGURATION?

The audio configuration of the amplified controller can be reset. This includes the following parameters:

- Input settings:
  - ABCD input source
  - XLR input mode
  - AVB fallback mode
  - AES AB fallback mode
  - AES/EBU & AVB GAIN
  - AVB stream mapping
- Settings protection
- Group parameters
- User presets

```
↕RESET AUDIO            ↔
 CONFIGURATION?
```

OK →

```
  RESET AUDIO CONFIG
    ARE YOU SURE?
```

OK →

```
011:K1                100
 LF_A  LF_A  MF_A  HF_A
```

Procedure

Disconnect the amplified controller from the L-NET network or switch LA Network Manager to offline mode before resetting.

Clearing user presets implies loading the preset from memory 011.

1. From the main menu, select **OPTIONS**.
2. Press the OK key or the encoder wheel to validate.
3. Turn the encoder wheel to select **RESET AUDIO CONFIGURATION?**.
4. Press the OK key or the encoder wheel to validate.
   The amplified controller displays **RESET AUDIO CONFIG, ARE YOU SURE?**.
5. Press the OK key or the encoder wheel to validate (or the ESC key to cancel).

RESET TO FACTORY DEFAULT SETTINGS?

The amplified controller settings can be reset to the factory default.

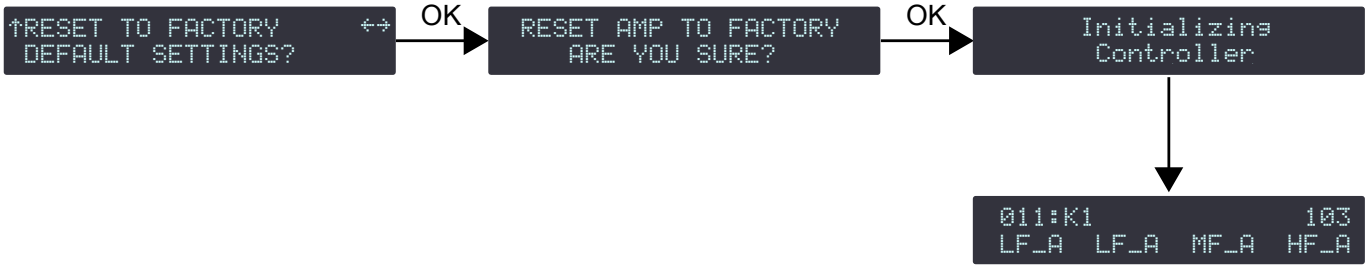

Procedure

Disconnect the amplified controller from the L-NET network or switch LA Network Manager to offline mode before resetting.

Amplified controllers default settings include loading the preset from memory 011.
The amplified controller retains its IP address.

1. From the main menu, select **OPTIONS**.
2. Press the OK key or the encoder wheel to validate.
3. Turn the encoder wheel to select **RESET TO FACTORY DEFAULT SETTINGS?**.
4. Press the OK key or the encoder wheel to validate.
   The amplified controller displays **RESET AMP TO FACTORY, ARE YOU SURE?**.
5. Press the OK key or the encoder wheel to validate (or the ESC key to cancel).
   The amplified controller launches the start-up sequence. When complete, the amplified controller displays the main screen.

IP SETTINGS

The IP SETTINGS menu gives access to the amplified controller's IP address, and to advanced network settings (subnet mask and gateway).

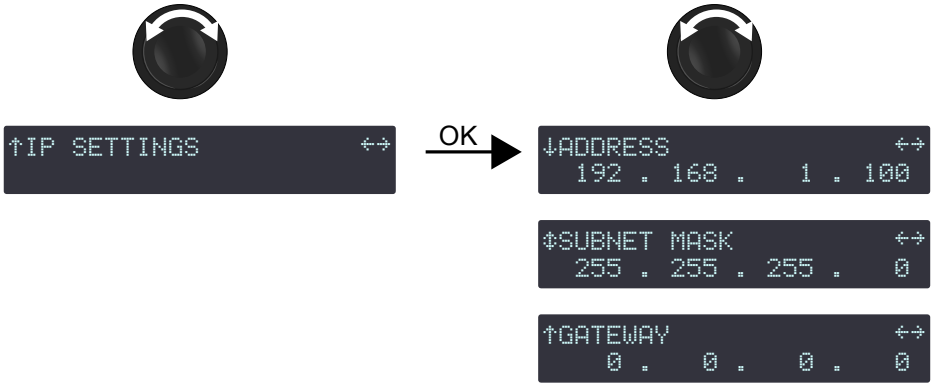

Remote control of processors and amplified controllers requires setting up a private local area Ethernet network to interconnect up to 253 units (and additional devices such as Ethernet switches / AVB bridges) with a single control computer. This Ethernet network, called L-NET, uses L-COM PROTOCOL, a proprietary communication protocol based on TCP/IPv4.

An IP address is a unique identifier for a network device on a given IP network. In IPv4 networking, it is made of 4 bytes (32 bits). An IP address is composed of a subnet address and a host address. The host address serves as a unique device identifier on the subnet. The subnet mask determines how many bits define the subnet address, and how many define the host address.

By convention, the first possible number of the host address is reserved to designate the subnet, and the last number is reserved to communicate with all devices of the subnet (IP broadcast address).

The factory default IP settings of all L-Acoustics devices are:

- IP address: 192.168.1.100
- Subnet address: 192.168.1.0/24
- IP broadcast address: 192.168.1.255
- Subnet mask: 255.255.255.0

With these settings, the first three bytes of the IP address (192.168.1) define the subnet address, and the last byte is the host address (100).

In general, it is recommended to:

- Use the default subnet address and subnet mask.
- Edit the device host address to provide a unique identifier to each unit: use consecutive IP addresses starting from 192.168.1.**1** up to 192.168.1.**253**.
- Set the control computer to 192.168.1.**254**.

However, it is possible to configure other IP settings when required by network administration. Subnet mask may be defined from 255.0.0.0 to 255.255.255.0, and the IP and gateway addresses must both belong to one of the following IP ranges (standards for Private Local Area Networks):

- 10.0.0.1 to 10.255.255.254
- 100.64.0.1 to 100.127.255.254
- 172.16.0.1 to 172.31.255.254
- 169.254.0.1 to 169.254.255.254 (not recommended)
- 192.168.0.1 to 192.168.255.254

LA Network Manager and its host computer must be using the same subnet and Subnet mask as the units.

In AVB redundant mode, the host address is always made identical for both the Primary and the Secondary network. The subnet address of the Secondary Network is that of the Primary +1. For example, with default settings:

- Primary port: 192.168.**1**.100
- Secondary port: 192.168.**2**.100

The subnet mask setting always applies to both networks. When using smaller subnet masks, the host address is also made identical. For example:

- Primary port: 172.**16**.1.100
- Secondary port: 172.**17**.1.100

The Gateway address is only available for the Primary network.

Make sure that:

- The IP address is included in one of the supported IP ranges.
- The gateway is set to an IP belonging to the same subnet, or is set to 0.0.0.0 if not used.

ADDRESS

modifying the IP address

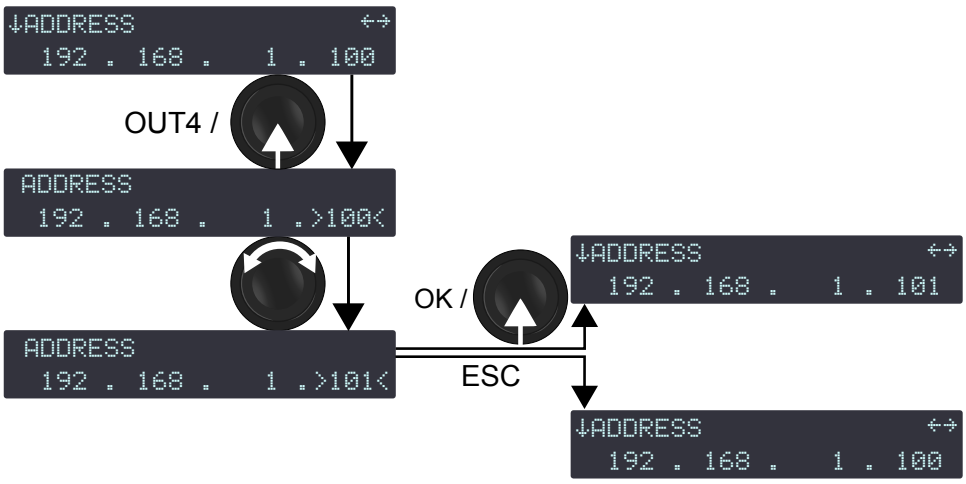

Procedure

1. From the main menu, select **IP SETTINGS**.
2. Press the OK key or the encoder wheel to validate.
3. Long-press the OUT4 key or press the encoder wheel to select the last byte.
4. Turn the encoder wheel to select a value for the byte.

   Turn the encoder wheel for 1-step resolution.
   Press and turn the encoder wheel for 10-step resolution.
5. Press the OK key or the encoder wheel to apply, or the ESC key to cancel.
6. **If needed**, set another byte (first, second or third number) as follows:
   a) Long-press the OUT key under the byte to select it.
   b) Turn the encoder wheel to select a value.
   c) Press the OK key or the encoder wheel to apply.
   d) On the computer hosting LA Network Manager, configure the same subnet.

      Refer to the LA Network Manager Help (in **User guide** > **General**).
   e) In LA Network Manager:
      1. Click the L-Acoustics logo and select **Options**.
      2. Enter the corresponding values in **IP Range to scan for L-NET**.

Values for the first byte (first number) are restricted to Private Local Area Network prefixes: 10, 100, 169, 172, and 192.

For the first three bytes, set all Units of a system to the same values (for instance 192.168.1) for remote control by LA Network Manager.

SUBNET MASK

The widest subnet mask that can be used is 255.255.255.0.

Wider subnet masks, such as 255.255.255.128, are not supported.

LA Network Manager and its host computer must be using the same subnet and Subnet mask as the units.

modifying the Subnet mask

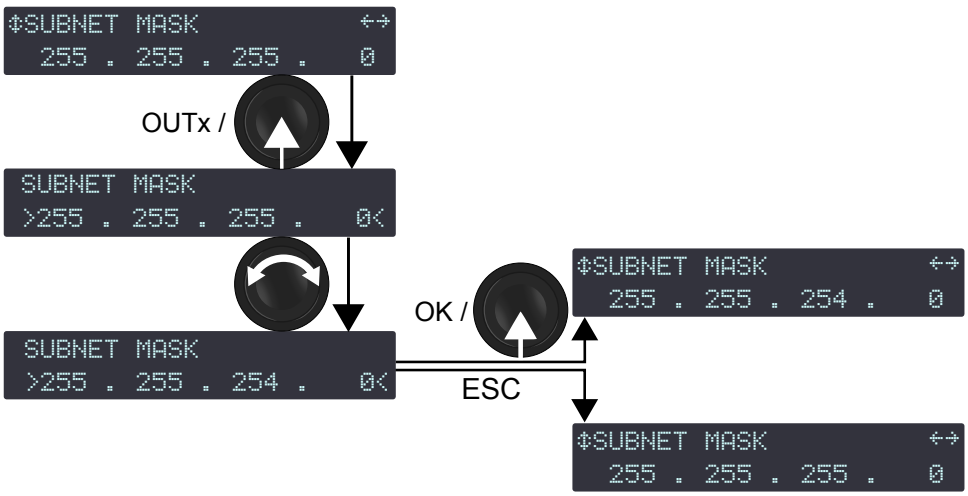

Procedure

1. From the main menu, select **IP SETTINGS**.
2. Press the OK key or the encoder wheel to validate.
3. Turn the encoder wheel to select **SUBNET MASK**.
4. Press any OUT key or the encoder wheel to select the Subnet mask.
5. Turn the encoder wheel to select a value for the Subnet mask.
6. Press the OK key or the encoder wheel to apply, or press the ESC key to cancel.
7. On the computer hosting LA Network Manager, configure the same Subnet mask.

   Refer to the LA Network Manager Help (in **User guide** > **General**).

GATEWAY

A gateway IP address is an advanced setting reserved for specific applications such as amusement parks, campuses, and multi-room venues with a centralized third-party supervision tool (SNMP, Crestron, Extron, Q-SYS). In such contexts, the supervision tool is often located in a different subnet that is interconnected with the subnets of the units. Interconnection is achieved thanks to a gateway. The gateway address must be set on the units to enable communication with the supervision tool.

modifying the gateway

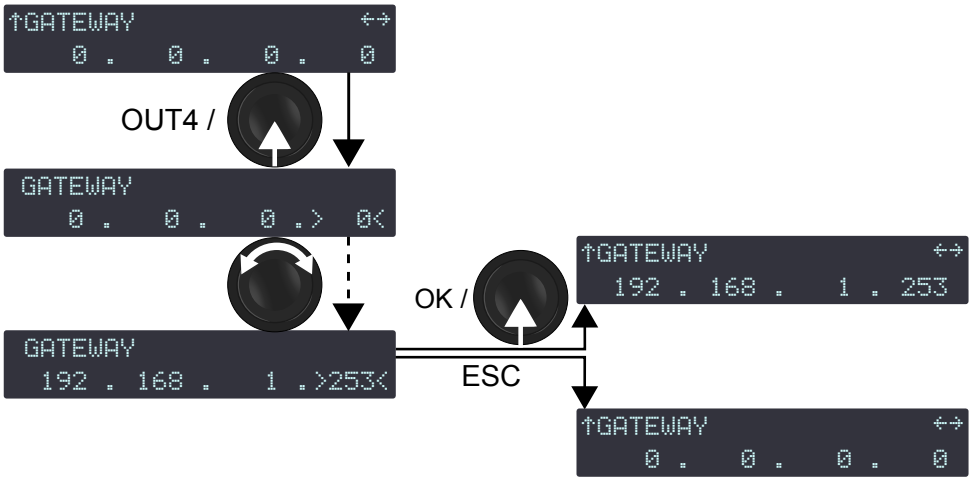

Procedure

1. From the main menu, select **IP SETTINGS**.
2. Press the OK key or the encoder wheel to validate.
3. Turn the encoder wheel to select **GATEWAY**.
4. Long-press the OUT key under a byte to select it.
5. Turn the encoder wheel to select a value for the selected byte.
6. Press the OK key or the encoder wheel to apply, or the ESC key to cancel.

Settings protection

Some settings can be protected from modifications.

Settings protection can only be enabled and disabled from LA Network Manager. Refer to the **LA Network Manager** Help and the **Settings Protection** technical bulletin.

When settings protection is enabled, some settings are completely locked, and the protection on the others can be temporarily bypassed by a 4-digit PIN code.

setting	protection
quick access to gain on OUT1 to OUT4	locked
LOAD PRESET FACTORY	PIN code protected
STORE PRESET	PIN code protected
DELETE PRESET	locked
PRESET PARAMETERS (all parameters)	PIN code protected
CLEAR GROUP PARAMS	PIN code protected
NETWORK ADDRESS	PIN code protected
RESET TO FACTORY DEFAULT SETTINGS?	locked

When settings protection is enabled and a user tries to modify a setting:

- Locked settings:
  - Screen displays **ACCESS LOCKED**.
  - Settings cannot be modified.
  - Press the ESC key to cancel.
- PIN code protected settings:
  - Screen display **ENTER PIN**.
  - Enter the PIN code to temporarily bypass the protection or press the ESC key to cancel.

Entering a PIN code

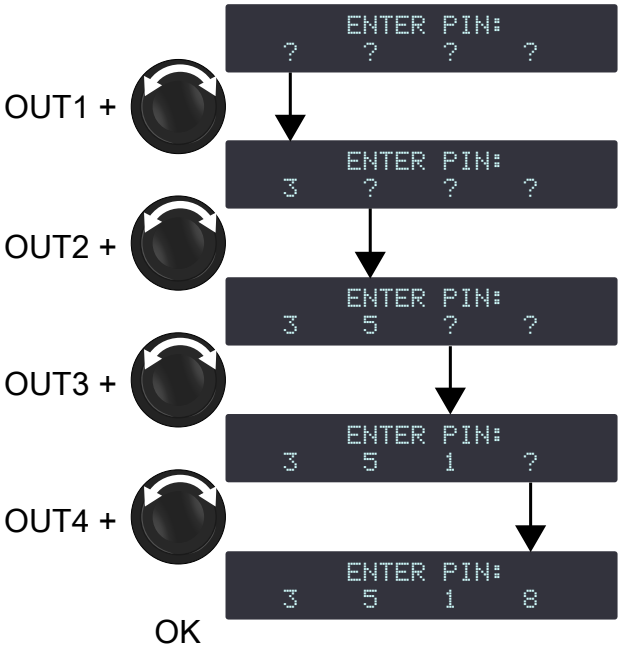

Procedure

1. Press and hold the OUT1 key.
2. Turn the encoder wheel to select the first digit of the PIN code.
3. Release the OUT1 key.
4. Repeat step 1 to 3 with the OUT2, OUT3 and OUT4 keys.
5. Press the OK key or the encoder wheel to validate.
   If the controller returns to the **ENTER PIN** screen, the entered PIN code is wrong.

   Repeat step 1 to 5 with the right PIN code, or press the ESC key to cancel.

Corrective maintenance

Introduction

This section is intended for end users and gathers the level 1 procedures.

This manual contains the maintenance operations authorized for the end user.
Performing another operation exposes to hazardous situations.

Troubleshooting and diagnosis (p.65)

This section contains the diagnosis tables and procedures to identify the issues and how to address them.

Exploded view (p.75)

This illustration gives an overview of the order in which the elements must be disassembled and reassembled. Each assembly refers to the corresponding D/R procedure and the necessary repair kit(s).

Disassembly and Reassembly procedures (p.76)

This section contains the maintenance procedures for each assembly identified in the exploded view.

Inspection and preventive maintenance (p.17)

These checks allow to detect an issue. The preventive maintenance must be performed regularly.

Equipment and tools

Tools

Before performing maintenance on this product, make sure all the tools listed are available. References are given for FACOM® products in this table. Other manufacturers can be used.

name	reference	distributor
set of 6-point 1/4" sockets	RL.NANO1 / R.360NANO	FACOM
torque screwdriver (0.5 - 2.5 N.m)	A.402	FACOM
3 mm slotted screwdriver	AEF.3X75	FACOM

Screws repair kit

This repair kit contains spares to replace lost or damaged screws while performing maintenance operations on LA12X.

G03286

KR spare external fasteners LA12X

×5

DIN7991 M4X10

M4×10 hex

×5

DIN912 M4X6

M4×6 hex

×5

ISO14581 M4X8

M4×8 Torx

×5

CHA162 RESUP1

support disk

Troubleshooting and diagnosis

For any issue, consider the diagnosis tables for the possible causes and inspection procedures (if any).

Before applying any procedure, consider the Exploded view (p.75) to get acquainted with the disassembly/reassembly procedures to perform before and after.

Interface issues

"black screen" and no LEDs when the controller is on

possible cause	diagnosis / procedure
power cord is not connected	• Check that the power cord is connected to mains. • Check that the powerCON is properly connected and locked.
mains failure or incompatible voltage	Check that mains are available and that voltage is compatible (100 V AC - 240 V AC ± 10%, 50 Hz - 60 Hz).
power cord damaged	Inspect the power cord. If necessary, replace it.
amplified controller on standby	Connect the amplified controller to a computer running LA Network Manager (the L-NET connector LEDs turn on) and switch the amplified controller to the operating mode.
other causes	Contact L-Acoustics.

"grey screen": LCD screen lit but nothing displayed

possible cause	diagnosis / procedure
condensing humidity	Put the controller in a non-condensing environment and wait until dry.
start-up / firmware issue	• Power off and on again. • Check if LA Network Manager detects the amplified controller. • Update the firmware.
other causes	Contact L-Acoustics.

LCD screen lit but dark

- LED & Backlight settings on low or off: Modify the LED & Backlight settings.
- Other causes: Contact L-Acoustics.

any action from the front interface has no effect

(controller not in standby mode and not locked, refer to the LA Network Manager help)

- Contact L-Acoustics.

one LED in a meter does not work (while the other LEDs of this meter work)

- Contact L-Acoustics.

the L-NET LED does not work when online

(refer to the LA Network Manager help)

- Contact L-Acoustics.

amplified controller does not power on (power LED is always red)

- Contact L-Acoustics.

L-NET network issues

impossible to connect an amplified controller to the L-NET network (controller not in "grey screen")

Refer to the LA Network Manager help for software use.

possible cause	diagnosis / procedure
LA Network Manager set in offline mode	Select the online mode.
selected scanning range does not contain the amplified controller IP address	Include the amplified controller IP address into the scanning range.
amplified controller set with an incorrect IP address, or several amplified controllers set with the same IP address	Set the computer IP address and subnet mask and the amplified controller IP address as indicated in the LA Network Manager help.
L-NET cable is not plugged or incorrectly plugged	Plug and secure appropriate network cables into the L-NET connectors on the amplified controllers to connect it to the other amplified controllers, the computer, or to the Ethernet switch (each of the amplified controller connectors can be equally used as an IN or LINK connector): The ACT/LINK LEDs should turn on. Refer to the LA Network Manager help.
L-NET cable is damaged	Replace any damaged network cable in the network chain.
more than two software clients are already connected to the amplified controller	Disconnect all other software clients.
firmware failure	Restart the amplified controller.
other causes	Contact L-Acoustics.

Error messages

A system message blinks and the STATUS LED is lit in red.

There is a corresponding event message in LA Network Manager (refer to the **LA Network Manager** Help)

Service message

`System Message` `Unit service required`	Displayed every 1.5 seconds in alternance with an issue's specific error message if this issue requires urgent maintenance on the unit. The unit must be sent to an L-Acoustics representative for maintenance.

Mains voltage messages

LA12X is equipped with a universal SMPS (Switched Mode Power Supply) compatible with mains input nominal voltages of 100 V AC - 240 V AC ± 10%. The mains connected to LA12X is monitored for under and over-voltage, refer to section MAINS VOLTAGE (V) (p.51).

`System Message` `Mains overvolt warning`	Displayed if mains voltage reaches a value 11 to 20 % above nominal. The unit remains operational, but mains voltage should be monitored.
`System Message` `Mains overvolt error`	Displayed if mains voltage reaches a value 20 % and more above nominal. The SMPS reboots. The unit should be connected to a more stable mains power source.
`System Message` `Mains peak volt warning`	Displayed if mains voltage reaches a peak value of 362 V. The unit remains operational, but mains voltage should be monitored. If using an electrical generator, check the sizing, refer to Planning the power of the electrical generator (p.21).
`System Message` `Mains peak volt error`	Displayed if mains voltage reaches a peak value of 400 V. The SMPS reboots. The unit should be connected to a more stable mains power source or the mains power source should be checked by a qualified electrician. If using an electrical generator, check the sizing, refer to Planning the power of the electrical generator (p.21).
`System Message` `Mains under volt warning`	Displayed if mains voltage reaches a value 10 to 20 % below nominal. The unit remains operational, but mains voltage should be monitored.
`System Message` `Fuseprotect`	Displayed if the mains electrical power circuit is challenged by the power demand of the unit. The signal delivered at the output channels is attenuated. Slightly reduce the audio levels to reduce the power demand.
`System Message` `Mains under volt error`	Displayed if mains voltage reaches a value below 50 V. The SMPS reboots. The unit should be connected to a more stable mains power source, the length of power source cables should be reduced, larger gauge power cables should be used, or less devices in parallel should be connected to this power line.

Mains frequency messages

LA12X is equipped with a universal SMPS (Switched Mode Power Supply) compatible with mains input nominal frequency of 50 Hz / 60 Hz. The mains frequency is monitored for under and over-frequency.

`System Message` `Mains over freq warning`	Displayed if mains frequency reaches a value of 65 Hz or above. The unit remains operational.
`System Message` `Mains under freq warning`	Displayed if mains frequency reaches a value of 44.9 Hz or below. The unit remains operational.

These messages may be displayed when the power supply (typically a generator) is being challenged by the power demand of the connected amplified controllers. Suggestion: slightly reduce the audio levels to reduce the power demand.

Component status messages

LA12X components are monitored for major or critical errors and faults.

`System Message` `Varistor fault`	Displayed if the line filter varistor is faulty. Risk of critical damage to the unit at the next peak on power supply.
`System Message` `SMPS com link fault`	Displayed if the communication link with the SMPS is faulty. The SMPS cannot report its status or the mains status.
`System Message` `SMPS com link offline`	Displayed if the communication link with the SMPS is offline. The SMPS cannot report its status or the mains status.
`System Message` `SMPS short-circuit`	Displayed if the SMPS has an internal short-circuit. The SMPS initiates a shut down for safety.
`System Message` `SMPS PFC protection`	Displayed if the SMPS power factor correction is faulty. The SMPS initiates a shut down for safety.
`System Message` `SMPS controller error`	Displayed if the SMPS microcontroller is faulty. The unit cannot operate.
`System Message` `SMPS 3.3V error`	Displayed if the SMPS 3.3 V supply is out of range. The unit cannot operate.
`System Message` `SMPS low power 5V error`	Displayed if the SMPS low power 5 V supply is out of range. The unit cannot operate.
`System Message` `SMPS high power 5V error`	Displayed if the SMPS high power 5 V supply is out of range. The unit cannot operate.
`System Message` `SMPS -15V error`	Displayed if the SMPS -15 V supply is out of range. The unit cannot operate.
`System Message` `SMPS +15V error`	Displayed if the SMPS +15 V supply is out of range. The unit cannot operate.
`System Message` `SMPS rail voltage error`	Displayed if the SMPS rail voltage supply is out of range or asymmetric. The SMPS initiates a fast restart.
`Unknown HW revision` `Contact L-ACOUSTICS`	Displayed if the DSP identification cannot be determined.
`System Message` `Hardware error`	Displayed if the firmware encounters a non-specified hardware error during startup or operation.
`System Message` `FPGA error`	Displayed if the FPGA cannot be initialized. Try to update the firmware. If the issue persists, contact L-Acoustics.
`System Error` `DSP start-up fault`	Displayed if the DSP cannot initialize. Try to update the firmware. If the issue persists, contact L-Acoustics.

The controller must be sent to an L-Acoustics representative for maintenance.

Output channel external error messages

The output channels are continuously monitored for external errors.

`Short-circuit on ch #` `Channel muted`	Displayed if a short-circuit is detected at an output channel. The channel is muted for 2 seconds. Check the loudspeaker cables and connectors, including link cables. If the issue persists, verify the loudspeaker enclosures.
`Under impedance on ch #` `Channel attenuated`	Displayed if a short-circuit is detected at an output channel. The signal delivered at the output channel is attenuated. Check the loudspeaker cables and connectors, including link cables.

If the error persists after disconnecting all cables and rebooting, the controller must be sent to an L-Acoustics representative for maintenance.

Output channel internal error messages

The output channels are continuously monitored for internal errors.

`DC on channel #` `Channel muted`	Displayed if a sporadic DC voltage above 8 V is detected at an output channel. The channel is muted for 0.5 seconds. The channel is automatically unmuted when returning to nominal state.
`DC on channel #` `Channel disabled`	Displayed if a DC voltage above 8 V is detected at an output channel for more than 0.5 seconds. The SMPS initiates an emergency shut down for safety. Reboot is required.
`15V under volt on ch #` `Channel muted`	Displayed if a voltage below 10 V is detected at an output channel. The channel is muted for 0.5 second.
`15V overvoltage on ch #` `Channel muted`	Displayed if a voltage above 18 V is detected at an output channel. The channel is muted for 0.5 second.
`Rail under volt on ch #` `Channel muted`	Displayed if rail voltage is below 110 V at an output channel. The channel is muted for 0.5 second.
`Rail overvolt on ch #` `Channel muted`	Displayed if rail voltage is above 190 V at an output channel. The channel is muted for 0.5 second.
`CC on channel #` `Channel disabled`	Displayed if a cross-conduct in the power stage is detected at an output channel. The SMPS initiates an emergency shut down for safety. Reboot is required.

If the error persists after disconnecting all cables and rebooting, the controller must be sent to an L-Acoustics representative for maintenance.

Network message

`System Message` `Invalid L-NET client`	Displayed if the unit detects a connection attempt from a version of LA Network Manager that is not compatible with the unit firmware (typically because the version of LA Network Manager is too old to manage the latest firmware features). Update LA Network Manager to version 2.3.0.0 minimum.

Other messages

`HF error on ch #` `Channel muted`	Displayed if energy above 25 kHz is detected at an output channel. The channel is muted for 2.5 seconds. Make sure the latest preset is being used. Contact your L-Acoustics representative for advice.
`System Message` `Update error`	Displayed if the firmware update has failed. Try to restart the unit. If the issue persists, check that each L-NET cable is in working order and is correctly plugged on both ends, and relaunch the update process. If the issue persists, contact L-Acoustics.
`High temp on ch #` `Channel attenuated`	Displayed if temperature at an output channel is above 90° C. The signal delivered at the output channel is attenuated until temperature returns to nominal conditions.
`Over temp on ch #` `Channel muted`	Displayed if temperature at an output channel is above 96° C. The signal delivered at this output channel is muted until the temperature returns to nominal conditions.
`System Message` `Fan blocked`	Displayed if a fan is faulty. The unit remains operational but there is a risk of temperature rising.
`System Message` `SMPS high temp warning`	Displayed if SMPS temperature reaches 75° C. The unit remains operational but temperature should be monitored.
`System Message` `SMPS over temp error`	Displayed if SMPS temperature reaches 80° C and above. The SMPS initiates a fast restart.
`System Message` `SMPS low temp warning`	Displayed if SMPS temperature reaches -15° C. The unit remains operational but temperature should be monitored.
`System Message` `SMPS under temp error`	Displayed if SMPS temperature reaches -20° C and lower. The SMPS initiates a fast restart.
`Module high temp on ch #` `Channel muted`	Displayed if temperature at an output channel reaches 97° C. The channel is muted for 2.5 seconds.
`Module over temp on ch #` `Channel disabled`	Displayed if temperature at an output channel reaches 102° C and above. The SMPS initiates an emergency shut down for safety. Reboot is required.
`Speaker fault on ch #` `Channel muted`	Displayed if the unit detects a short-circuit fault in the speaker coil or the input board of the connected enclosure. The output channel is muted to avoid a potential risk of physical harm and further damages to the product. Verify the connected loudspeaker enclosures. Disconnect or replace the faulty enclosure, then unmute the output channel.

For temperature-related messages

possible cause	diagnosis / procedure
room temperature is too high / too low	Make sure room temperature is within amplified controller operating condition range (-5 °C / 23 °F to 50 °C / 122 °F).
foam filter clogged	Clean or replace the foam filter.
inside of amplified controller dusty	Clean the amplified controller with an air blower.
amplified controller is not getting enough cool air	Install the amplified controller in an open area so that the front and rear panels are not blocked by an external object or structure. If rack-mounted: • Do not block the ventilation grill with front and back panels or doors, or use a forced ventilation system. • When stacking more than one amplified controller, mount them directly on top of one another or close the free spaces with blank panels.
channel resources are solicited to their limits	Monitor the channel LED meter: In case of persistent high level or clip, reduce the audio source output level (refer to the third-party documentations) or the gain value on the channel.
loudspeaker impedance too low	Check that nothing causes a short-circuit at the output (incorrect cabling scheme, damaged cable or short-circuit in the speaker voice coil).

Sound issues

no sound with no error message

(amplified controller is not in standby mode. Refer to the LA Network Manager help)

possible cause	diagnosis / procedure
mains failure	Inspect the mains.
outputs are muted	Unmute the outputs.
incorrect input mode	If the fallback mode is ON, switch it OFF. Select the input mode according to the audio source format (Milan AVB, AES/EBU, analog). If using Milan AVB, check the AVB configuration and parameters.
incorrect preset selection	Select a preset in accordance with the loudspeaker system connected to the outputs.
gain value is too low on the amplified controller	Set an appropriate gain value on channels OUT1 to OUT4. If the AES/EBU input mode is selected, set an appropriate AES/EBU input gain value.
audio source is not plugged, incorrectly plugged, or plugged into the wrong input connector	Plug/Replug and secure each audio source cable into the audio source and the corresponding input connector on the amplified controller.
audio source cable is damaged	Replace the audio source cable.
incorrect settings on the audio source	Set appropriate parameter values on the audio source, in particular the output gain value (refer to the third-party documentation).
non-audible bit stream	Check that the AES/EBU source does not deliver non-audio bit stream (for example encoded audio).
audio source failure	Inspect the audio source for failure. Reminder: A digital audio source can meet the following failures: no clock, loss of lock, invalid audio (validity bit), CRC error, bipolar encoding error, data slip.
loudspeaker not plugged, incorrectly plugged, or plugged into the wrong output connector	Plug/Replug and secure each loudspeaker cable into the loudspeaker and the corresponding output connector on the amplified controller.
loudspeaker cable is damaged	Replace the loudspeaker cable.
loudspeaker is damaged	If only one loudspeaker is connected, inspect it.
other causes	Contact L-Acoustics.

noise, level loss, distorted sound, white noise (no error message)

possible cause	diagnosis / procedure
AES/EBU audio source is connected to an analog input	Check the input signal cabling and check that the input mode has been selected accordingly in the INPUT SETTINGS menu.
gain value too high on the amplified controller	Set an appropriate gain value on channels OUT1 to OUT4. If the AES/EBU input mode is selected, set an appropriate AES/EBU input gain value.
output gain value too high on the audio source	Set an appropriate output gain value on the audio source (refer to the third-party documentation).
switch to the analog fallback mode with incorrect AES/EBU input gain value	Set an appropriate AES/EBU input gain value and inspect the digital audio source for failure. Reminder: A digital audio source can meet the following failures: no clock, loss of lock, invalid audio (validity bit), CRC error, bipolar encoding error, data slip.
incorrect preset selection	Select a preset in accordance with the loudspeaker system connected to the outputs.
audio source cable incorrectly plugged	Unplug the audio source cable and plug it again on the audio source and the amplified controller. Verify with the installer if ground loops can occur.
audio source cable damaged	Replace the audio source cable.
incorrect settings on the audio source	Set appropriate parameter values on the audio source (refer to the third-party documentation).
audio source failure	Inspect the audio source for failure.
loudspeaker incorrectly plugged or plugged into the wrong output connector	Plug/Replug and secure each loudspeaker cable into the loudspeaker and the corresponding output connector on the amplified controller. Verify with the installer if ground loops can occur.
loudspeaker cable damaged	Replace the loudspeaker cable.
loudspeaker is damaged	If only one loudspeaker is connected, inspect it.
other causes	Contact L-Acoustics.

sound only available in one input mode and not the other

sound only available in AES/EBU and not in analog, or sound only available in analog and not in AES/EBU

- Contact L-Acoustics.

Exploded view

In the exploded view, each assembly corresponds to a D/R procedure and the necessary repair kit(s).

Spare screws and fasteners
Assemblies indicated by a ◊: order G03286 (KR spare external fasteners LA12X) for spares.

Exploded view - external modules

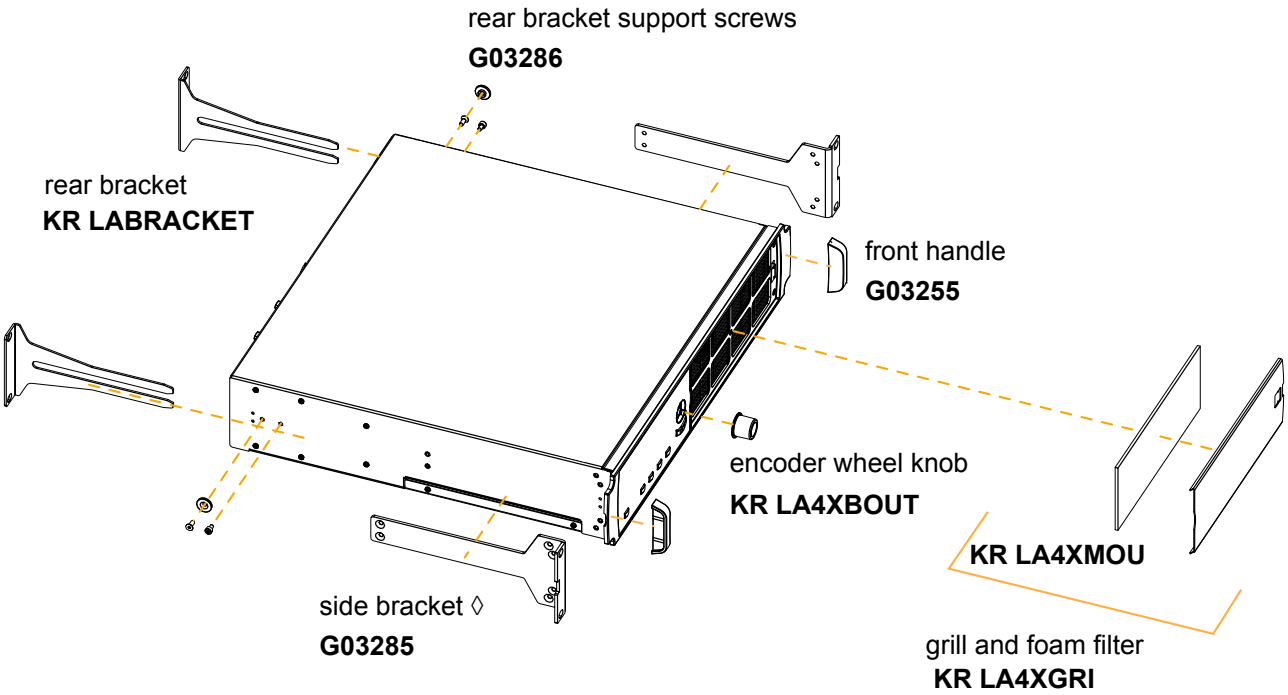

Disassembly and Reassembly procedures

D/R - Grill and foam filter

This procedure describes how to disassemble the grill and foam filter for replacement or cleaning.

Tools

- 3 mm slotted screwdriver

Repair kits

KR LA4XGRI

KR grill LA4X / LA12X

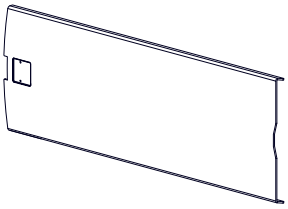

×1

MC LA4XGRL

LA4X and LA12X grill

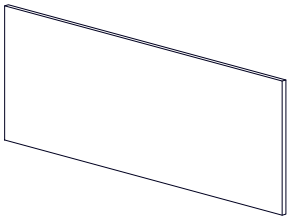

×1

CM LA4X

LA4X and LA12X foam filter

Exploded view

To clean the foam filter, use mild dishwashing detergent or soap then dry it.

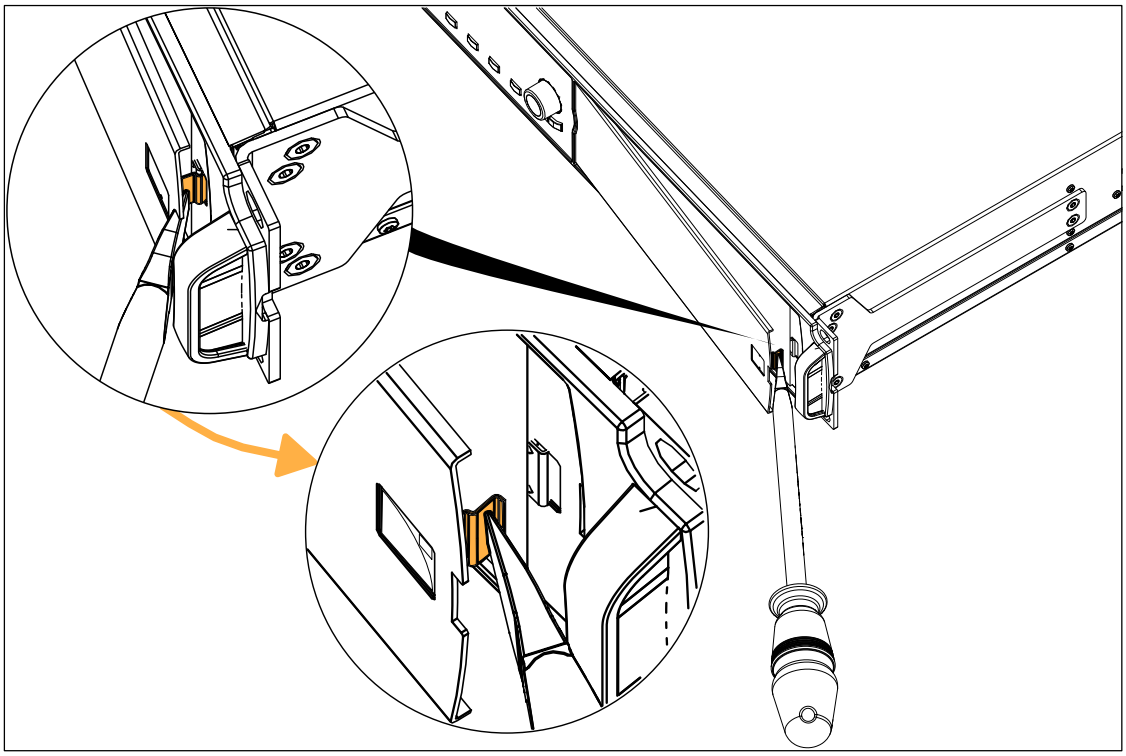

D/R - Side bracket

Tools and consumables

- torque screwdriver
- T20 Torx bit
- blue threadlocker

Repair kits

G03285

KR front bracket LA12X

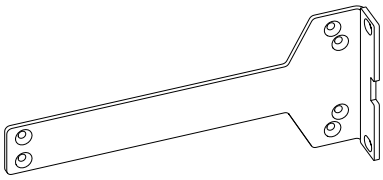

17721

LA12X front bracket

G03286

KR spare external fasteners LA12X

×2 ×5

ISO14581 M4X8

M4×8 Torx

Exploded view

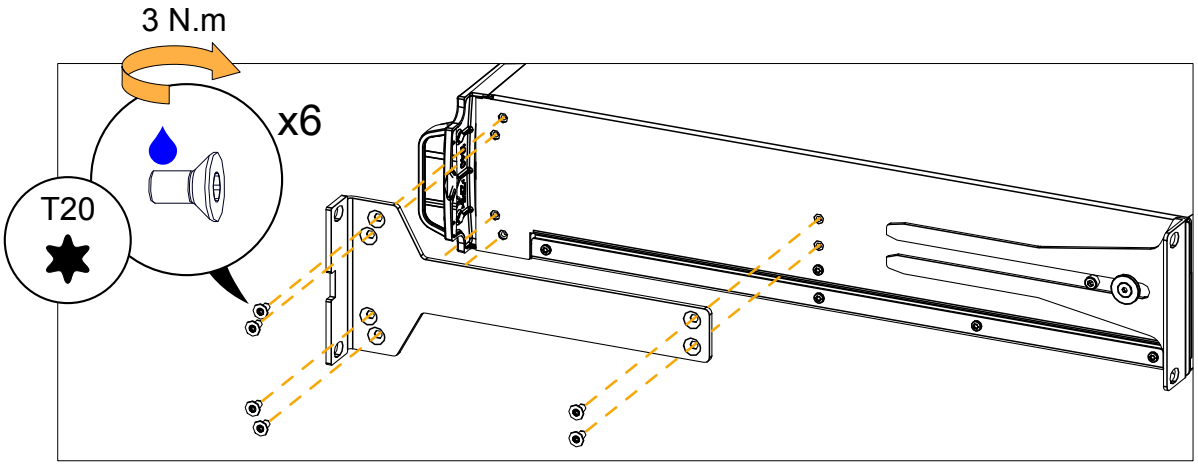

D/R - Rear bracket

Repair kits

KR LABRACKET

KR rear brackets LA4/LA4X/LA8/LA12X

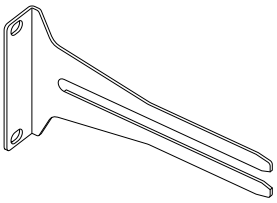

×2

G1815

amplified controller rear bracket

Kit contains additional components that are not required for this procedure.

Exploded view

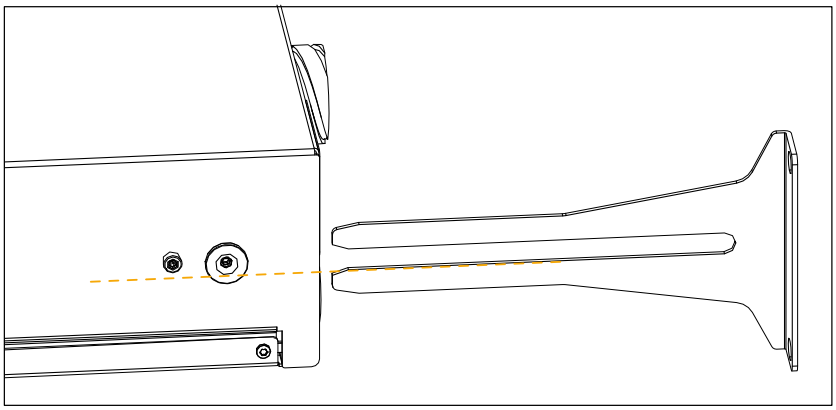

D/R - Rear bracket support screws

Tools

- torque screwdriver
- 3 mm hex bit
- 2.5 mm hex bit

Repair kits

G03286

KR spare external fasteners LA12X

×5

DIN7991 M4X10

M4×10 hex

×5

DIN912 M4X6

M4×6 hex

×5

CHA162 RESUP1

support disk

Exploded view

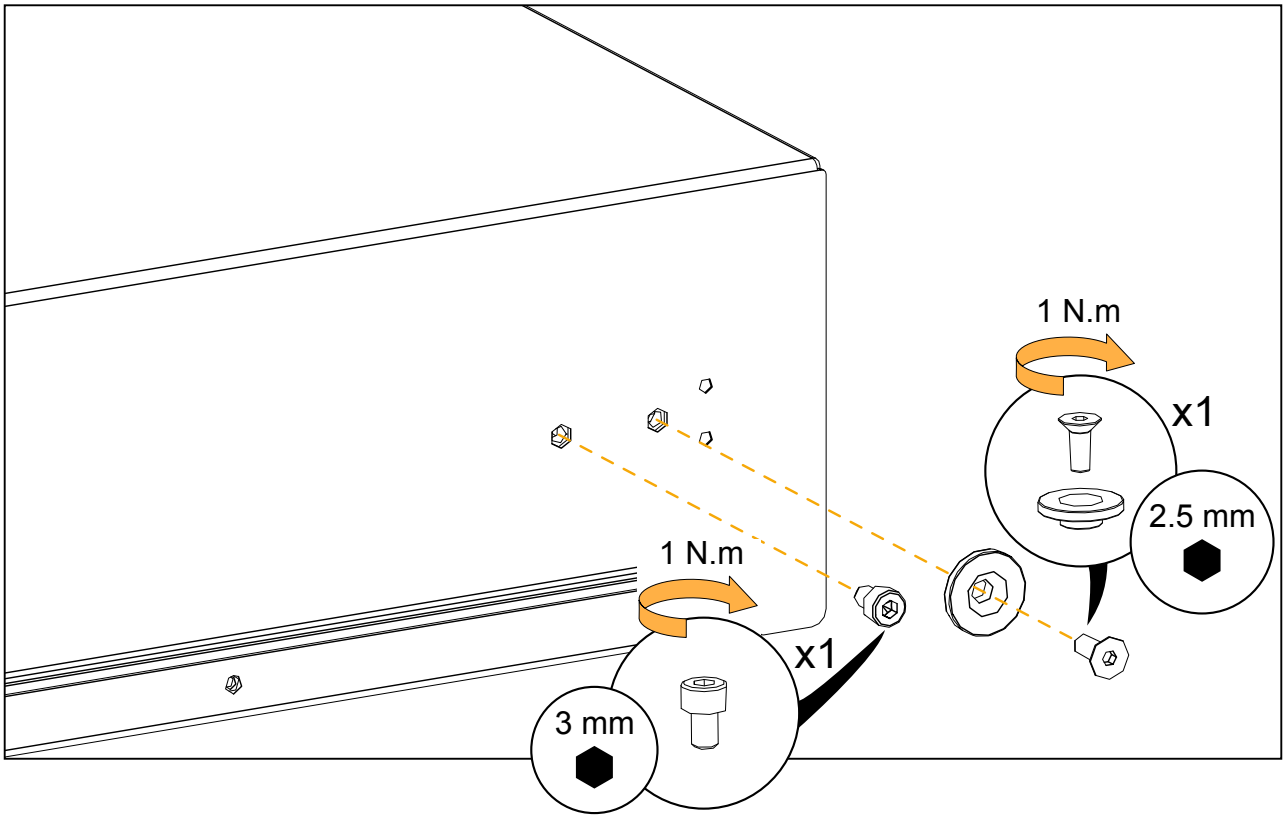

D/R - Front handle

Tools

- torque screwdriver
- T15 Torx bit

Repair kits

G03255

KR handles (x2) LA12X

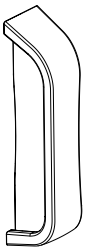

×2

G03364

amplified controller front handle

×4

CV TF3512IP

M3.5×12 Torx

Prerequisite

Side brackets disassembled.

See D/R - Side bracket (p.77).

Exploded view

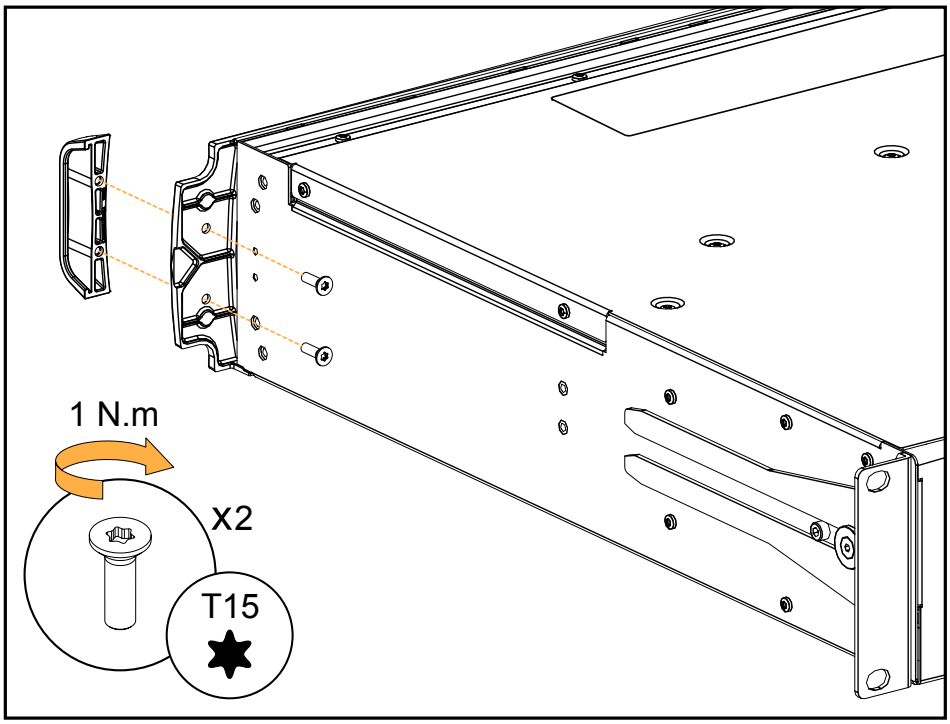

CV TF3512IP are self-drilling screws. For safety reasons, always reassemble new front handles.

D/R - Encoder wheel knob

Repair kits

KR LA4XBOUT

KR encoding wheel button LA4X/LA12X/P1

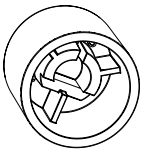

×1

MM LA4XBOUT

LA4X and LA12X encoder wheel knob

Kit contains additional components that are not required for this procedure.

Exploded view

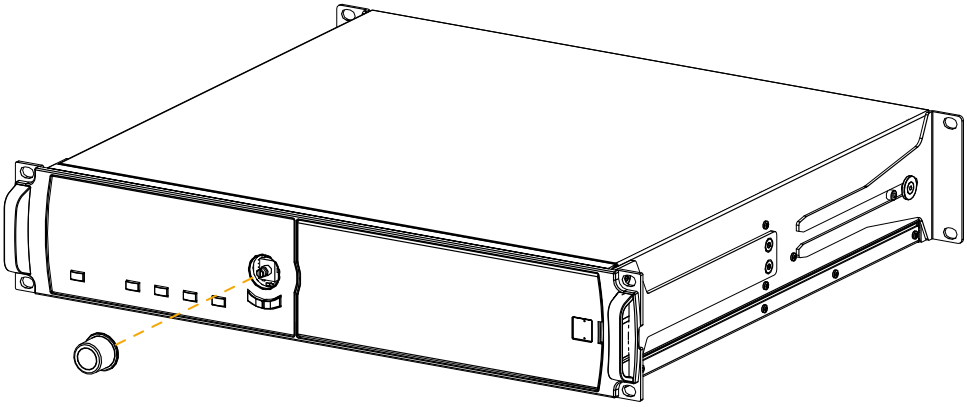

Specifications

All values given in this section are typical values.

General

Output power CEA-2006 / 490A 20 ms (1% THD, 1 kHz, all channels driven)	4 × 1400 W RMS (at 8 Ω) 4 × 2600 W RMS (at 4 Ω) 4 × 3300 W RMS (at 2.7 Ω)
Amplification class	Class D
Digital Signal Processor (DSP)	2 SHARC 32-bit, floating point, 96 kHz sampling rate
Frequency response 20 Hz - 20 kHz	± 0.1 dB (at 8 Ω, 60 W output power) ± 0.1 dB (at 4 Ω, 120 W output power)
Distortion THD+N (20 Hz - 10 kHz)	< 0.05% (at 8 Ω, 60 W output power) < 0.1% (at 4 Ω, 120 W output power)
Output dynamic range	> 114 dB (20 Hz - 20 kHz, 8 Ω, A-weighted)
Amplification gain	32 dB
Noise level	< - 75 dBV (20 Hz - 20 kHz, 8 Ω, A-weighted)
Channel separation	> 85 dB (at 1 kHz , 3 x 120 W, 4 Ω)
Damping factor	> 400 (1 kHz and below, 8 Ω)
Output delay	0 ms to 1000 ms

Mains input power and current draw (all channels driven)

Maximum output power	4 x 1400 W at 8 Ω	4 x 2600 W at 4 Ω	4 x 3300 W at 2.7 Ω
1/3 output power (-5dB)	10.5 A / 2300 W	19 A / 4200 W	26 A / 5500 W
1/8 output power (-9 dB)	4.8 A / 1050 W	8.1 A / 1850 W	11.5 A / 2400 W

Current values given for mains rated at 230 V. Multiply by:

- 2.3 for 100 V
- 1.9 for 120 V
- 1.15 for 200 V

Mains input power and current draw in Idle and Standby modes

	230 V	**120 V**	**100 V**
Idle	1 A / 141 W	1.2 A / 141 W	1.3 A / 141 W
Standby	0.6 A / 10 W	0.4 A / 10 W	0.3 A / 10 W

Power supply

Model	universal Switched Mode Power Supply (SMPS) with power factor correction (PFC)
Power factor	> 0.9 (except Standby on all voltages, and Idle on 230 V)
Mains rating	100 V AC - 240 V AC ~ ± 10%, 50 Hz - 60 Hz
Nominal current requirements	30 A for 100-120 V, 16 A for 200-240 V
Circuit breaker	Use these references, or equipment with equivalent characteristics: 100-120 V: 30 A, Schneider Electric Square D 30A QO (in North America), or Mitsubishi CP30-BA-M (in Japan) 200-240 V: 16 A, Type C

Operating conditions

Temperature	room temperature (-5 °C / 23 °F to 50 °C / 122 °F)

Protection

Mains and power supply	over and under voltage over temperature overcurrent (fuse protection, and inrush current protection)
Power outputs	over current DC short circuit rail over and under voltage over temperature
Transducers protection	L-DRIVE: excursion temperature over-voltage
Cooling system	fans with temperature-controlled speed
Fan noise (free field, 1 m)	at minimum speed: <34 dBA at maximum speed: <62 dBA

Interface and connections

Indicators	3 LEDs for power, status and L-NET information For each output: 7 LEDs for mute, load, signal, levels and limit/clip information
Interface	2 × 24 characters LCD screen
Output connectors	2 × 4-point speakON 1 × 8-point CA-COM
L-NET connectors	2 x 1 Gb/s Ethernet etherCON® I/O

Input signal distribution

Connectors

Input	4 Neutrik® female XLR3, IEC 60268-12, ESD protected
Link	4 Neutrik® male XLR3, IEC 60268-12, ESD protected

powerCON, etherCON, speakON, Neutrik are registered trademarks of Neutrik AG.

Available input connectors vs. input mode

Analog AB / Analog CD	IN A, IN B / IN C, IN D (4 connectors, 4 channels)
Analog AB / Digital CD	IN A, IN B / IN C&D (3 connectors, 4 channels)
Digital AB / Analog CD	IN A&B / IN C, IN D (3 connectors, 4 channels)
Digital AB / Digital CD	IN A&B / IN C&D (2 connectors, 4 channels)

Link connectors

Analog input mode	passively connected
Digital input mode	electronically buffered, failsafe relay

Analog input

Input impedance	22 kΩ (balanced)
Maximum input level	22 dBu (balanced, THD 1%)
A/D conversion	4 cascaded 24-bit analog/digital converters (130 dB dynamic range)

Digital input

Supported operating mode

Standards	AES/EBU (AES3)
Sampling frequency (Fs)	44.1, 48, 88.2, 96, 176.4 or 192 kHz
Word length	16, 18, 20 or 24 bits
Synchronization	signal resampled to internal clock at 96 kHz

Sample Rate Converter (SRC)

Sampling frequency	96 kHz (SRC referenced to the amplified controller internal clock)
Word length	24 bits
Dynamic range	140 dB
Distortion THD+N	< -120 dBFS (dB Full Scale)
Bandpass ripple	±0.05 dB (20 Hz - 40 kHz, 96 kHz)

Input gain

Range	-12 dB to +12 dB
Steps	0.1 dB

Latency

Analog and AES/EBU

In standard operating mode	3.84 ms (independent from input Fs)
In low latency operating mode	0.84 ms (independent from input Fs)

AVB

Featured AVB entities	MILAN™-certified, Avnu™-certified AVB Bridge and Listener
Standards	Ethernet AVB: IEEE 802.1BA-2011 Transport: IEEE 1722-2016 (AVTP) Control: IEEE 1722.1-2013 (AVDECC)
Input audio stream	Number: 1 (2 in redundancy mode) Class: A Maximum network latency: 2 ms Formats: AAF PCM32, up to 8 channels, at 48 kHz or 96 kHz IEC 61883-6 AM824, 8 channels, at 48 kHz or 96 kHz
Media clock	automatically synchronized on clock of the connected AVB input stream (upsampling at 96 kHz in case of stream at 48 kHz)
Streams forwarded by AVB Bridge (in normal mode)	up to 150

Automatic fallback option

Mode	AVB to XLR XLR AB to XLR CD (digital to analog or digital to digital)
Switchover conditions	AVB to XLR: loss of lock XLR to XLR: no clock, loss of lock, CRC error, bipolar encoding error or data slip
Constant delay	independent from input Fs
Constant level	upon manual user selection of AES/EBU & AVB gain, independent from input Fs
Revert to initial input	upon manual user selection

Remote control and monitoring

Network connection	dual-port Ethernet Gigabit interface
L-Acoustics remote control software	LA Network Manager 2
Third-party management solutions	SNMP, Extron®, Crestron®, QSC Q-SYS

Extron is a registered trademark of Extron Electronics.

Crestron is a trademark or registered trademark of Crestron Electronics, Inc. in the United States, other countries or both.

QSC® and Q-SYS™ are trademarks or registered trademarks of QSC, LLC in the U.S. Patent and Trademark Office and other countries.

Physical data

Height	2U
Weight	14.5 kg / 32 lb
Finish	black
Protection rating	IP2x

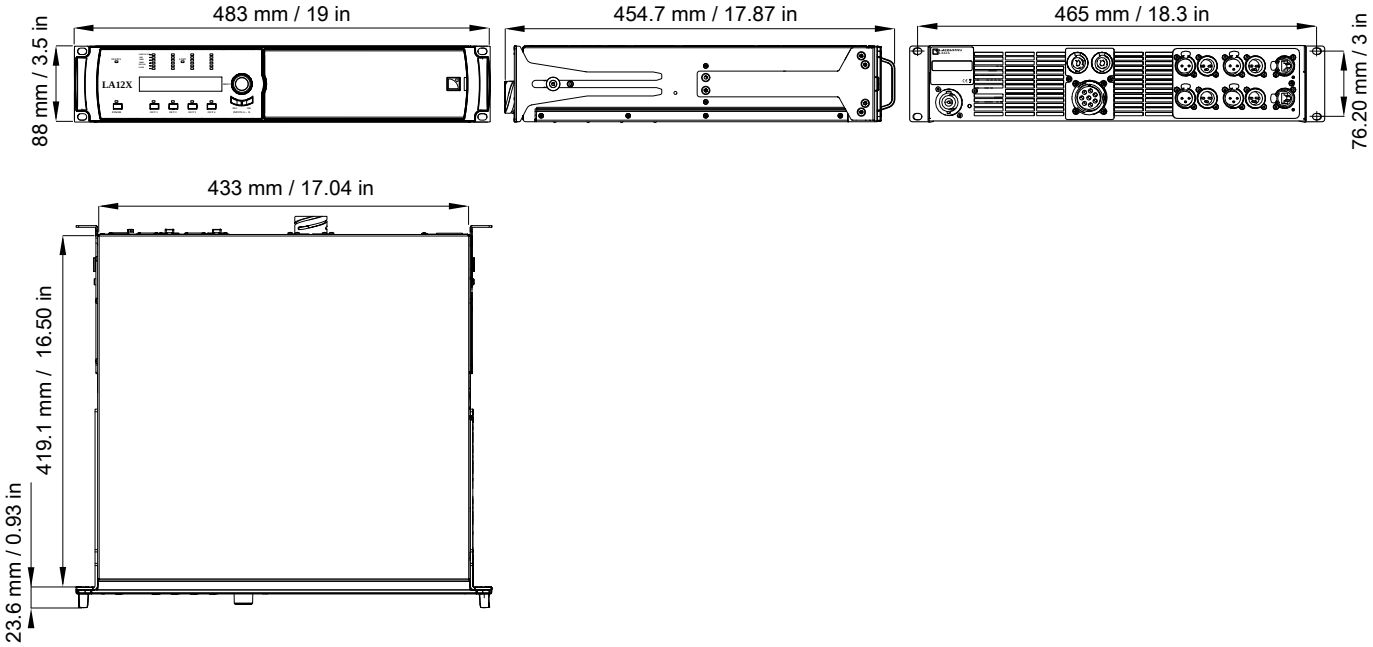

Glossary

CE	Europe
CHK	check procedure
CN	China
D/R	disassembly/reassembly procedure
INSP	inspection procedure
INT	international (bare lead version of the power cable)
KR	repair kit
N.m	newton meter, international torque unit, 1 N.m = 9 in lbf
SMPS	Switched Mode Power Supply (power supply inside of the amplified controller)
US	United States

List of AVB reservation (RSV) errors

code	error	resolution
1	Out of bandwidth	There is not enough bandwidth on the path from the talker to the listener. • Check that all the bridges in use have a speed of 1 Gb/s (minimum). • Check the configuration of the bridges: some allow a higher bandwidth allocation for AVB streams (default is 75% of link speed). • Change the stream format: select a lower sampling rate, reduce the number of channels if some are unused. • Optimize the stream and channel usage: for each talker, use the minimum number of streams and the maximum number of channels per stream. • Disconnect some of the already connected streams to release bandwidth.
2	Out of bridge resources	One of the bridges on the path from the talker to the listener reached its limits. • Try to reboot the bridges on the path from the talker to the listener. • Try to disconnect some streams.
3	Out of bandwidth for traffic class	See error 1.
4	Stream ID used by another talker	A device on the network is behaving incorrectly. • Disconnect and reconnect the stream. • Reboot the talker. • Reboot the bridges on the path from the talker to the listener. • If the talker supports manual configuration of the stream parameters, configure the stream to use another Stream ID.
5	Stream dest. addr. already in use	A device on the network is behaving incorrectly. • Disconnect and reconnect the stream. • Reboot the talker. • Reboot the bridges on the path from the talker to the listener.
6	Stream preempted by higher rank	An emergency stream has been connected and reclaimed the bandwidth that was used by the Unit stream. • Wait until the emergency stream is disconnected (bandwidth is automatically reallocated). • Try the resolutions of error 1.

code	error	resolution
7	Reported latency has changed	A device on the network is behaving incorrectly. • Disconnect and reconnect the stream. • Reboot the talker. • Reboot the bridges on the path from the talker to the listener.
8	Egress port is not AVB capable	Temporarily displayed when a network cable is disconnected then reconnected. If displayed for more than a few seconds, it indicates one of the switches in the network is non-AVB capable, or is configured incorrectly. • Only use AVB-capable bridges on the path from the talker to the listener. • If the bridges support configuration of the SR Class priority, configure all the bridges with the same setting (default is 3 for Class A streams).
9	Use a different dest. address	One of the bridges on the path from the talker to the listener has used all of its internal resources. • If the talker supports manual configuration of the stream parameters, configure it to use another destination MAC address. • Try to reboot the talker to make it use another MAC address. • Disconnect some already reserved streams.
10	Out of MSRP resources	One of the bridges on the path from the talker to the listener has reached its limits. • Try to disconnect some streams. • Try to reboot the bridges on the path from the talker to the listener.
11	Out of MMRP resources	One of the bridges on the path from the talker to the listener has reached its limits. • Try to disconnect some streams. • Try to reboot the bridges on the path from the talker to the listener.
12	Cannot store dest. addr.	One of the bridges on the path from the talker to the listener has reached its limits. • Try to disconnect some streams. • Try to reboot the bridges on the path from the talker to the listener.
13	Req. priority is not an SR class	The talker is behaving incorrectly, or the switches configuration has changed while the stream was active. • Disconnect and reconnect the stream. • Reboot the talker.
14	Max frame size too big for media	The talker is behaving incorrectly. • Disconnect and reconnect the stream. • Reboot the talker.
15	MSRP fan-in ports limit reached	One of the bridges on the path from the talker to the listener has AVB ports usage limitation and has reached its limits. • If possible, change the configuration of the bridges to allow more simultaneous usage of AVB ports. • Review the network cabling to use less ports on the limiting bridge(s).
16	Changed first value for reg. stream ID	A device on the network is behaving incorrectly. • Disconnect and reconnect the stream. • Reboot the talker. • Reboot the bridges on the path from the talker to the listener.
17	VLAN blocked on egress port	One of the bridges on the path from the talker to the listener is incorrectly configured. • Configure the bridges to allow dynamic VLAN registration. • If possible, configure the talker to use a different VLAN (one that is authorized by the bridges).

code	error	resolution
18	VLAN tagging off on egress port	One of the bridges on the path from the talker to the listener is incorrectly configured. • Configure the bridges to enable VLAN tagging of the egress packets.
19	SR class priority mismatch	A wrongly configured AVB bridge is present in the network. • Configure all the bridges with the same setting (default is 3 for Class A streams).

List of AVB connection (CON) errors

code	error	resolution
2	Talker unknown ID	The AVB controller has requested the listener to connect to a talker, specified by an identifier, but that identifier does not exist, or no longer exists. Check that the AVB controller is sending the correct information.
3	Talker dest. mac fail	A listener is trying to connect to a talker while the talker is allocating the destination MAC for the stream. If displayed for more than a few seconds, check for non-Avnu certified devices on the network. Preferably use Avnu-certified devices.
4	Talker no stream index	A third-party talker has an issue allocating an ID to a stream. Refer to the third-party documentation.
5	Talker no bandwidth	The talker cannot deliver all of its streams because a switch on the network does not have enough bandwidth. Use switches with enough bandwidth capabilities.
6	Talker exclusive	A third-party talker that supports a limited number of listeners has reached its limits. Refer to the third-party documentation.
13	Talker misbehaving	The talker has an internal error. Reboot the talker.
16	Controller not authorized	Another AVB controller has locked the talker. Unlock the talker.
17	Incompatible request	The listener is trying to connect to a talker that is already streaming with a different traffic class, or does not support the requested traffic class. If in redundant mode, check the cabling (port 1 must be used for the Primary network and port 2 for the Secondary network).
31	Not supported	Request is unknown to a third-party, non-MILAN compatible talker. Refer to the third-party documentation.

Approvals

EU Declaration of Conformity (DoC)

EU Declaration of Conformity (DoC)

We

L-Acoustics

13 rue Levacher Cintrat
Parc de la Fontaine de Jouvence
91462 Marcoussis Cedex
France

+33 (0)1 69 63 69 63
info@l-acoustics.com

declare that the DoC is issued under our sole responsibility and belongs to the following product:

LA12X amplified controller

The object of the declaration described above is in conformity with the relevant Union harmonization legislation:

2014/35/EU: Low Voltage Directive
2014/30/EU: Electro-Magnetic Compatibility Directive
2011/65/EU: RoHS 2 Directive

The following harmonized standards and technical specifications have been applied:

EN 62368-1:2014 Audio/video, information and communication technology equipment — Part 1: Safety requirements
EN 55032: 2015 Electromagnetic compatibility of multimedia equipment — Emission Requirements
EN 55103-2: 2009 Electromagnetic compatibility — Product family standard for audio, video, audio-visual and entertainment lighting control apparatus for professional use — Part 2: Immunity

Technical file compiled by:

Genio KRONAUER

13 rue Levacher Cintrat
Parc de la Fontaine de Jouvence
91462 Marcoussis Cedex
France

Year CE marking was first affixed: 2016

Issued in Marcoussis, France
04/01/2018

Genio KRONAUER, Electronics Director

LA12X is certified with the following:

LA12X is compliant with the following:

Avnu Alliance and the Avnu design mark are registered trademarks and/or service marks of Avnu Alliance.

L-Acoustics
13 rue Levacher Cintrat - 91460 Marcoussis - France
+33 1 69 63 69 63 - info@l-acoustics.com
www.l-acoustics.com

L-ACOUSTICS
GROUP