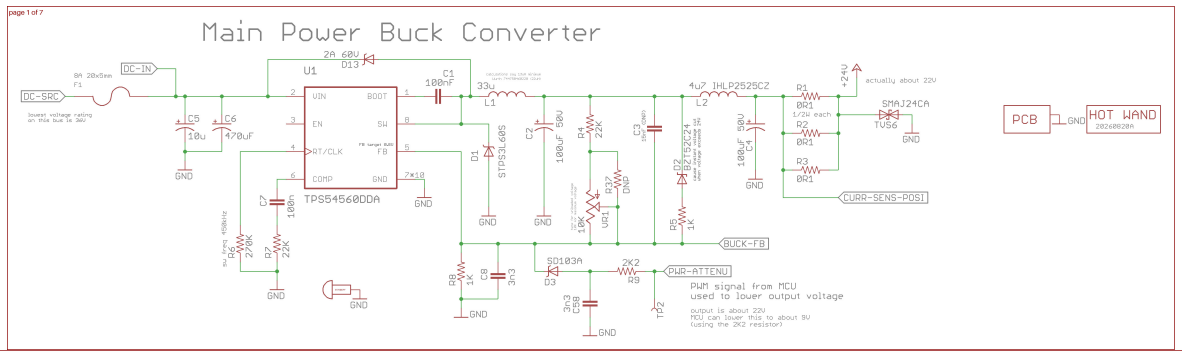
page 1 of 7
Main Power Buck Converter
DC-IN
DC-SRC
8A 20x5mm
F1
lowest voltage rating on this bus is 24V
C5 10u
C6 470uF
GND
2A 60V
D13
U1
VIN
EN
RT/CLK
COMP
BOOT
SW
FB
GND
TPS54560DDA
C1 100nF
33u
L1
D1
STPS3L60S
C2 100uF 50V
R4 22K
R37 DNP
VR1 10K
C3 DNP
D2 BZT52C24
R5 1K
4u7 IHLP2525CZ
L2
100uF 50V
C4
R1 0R1
1/2W each
R2 0R1
R3 0R1
actually about 22V
SMAJ24CA
TVS6
CURR-SENS-POSI
BUCK-FB
R8 1K
C8 3n3
SD103A
D3
2K2
R9
PWR-ATTENU
C39 3n3
TP2
PWM signal from MCU
used to lower output voltage
output is about 22V
MCU can lower this to about 9V
(using the 2K2 resistor)
PCB
HOT WAND
20260828

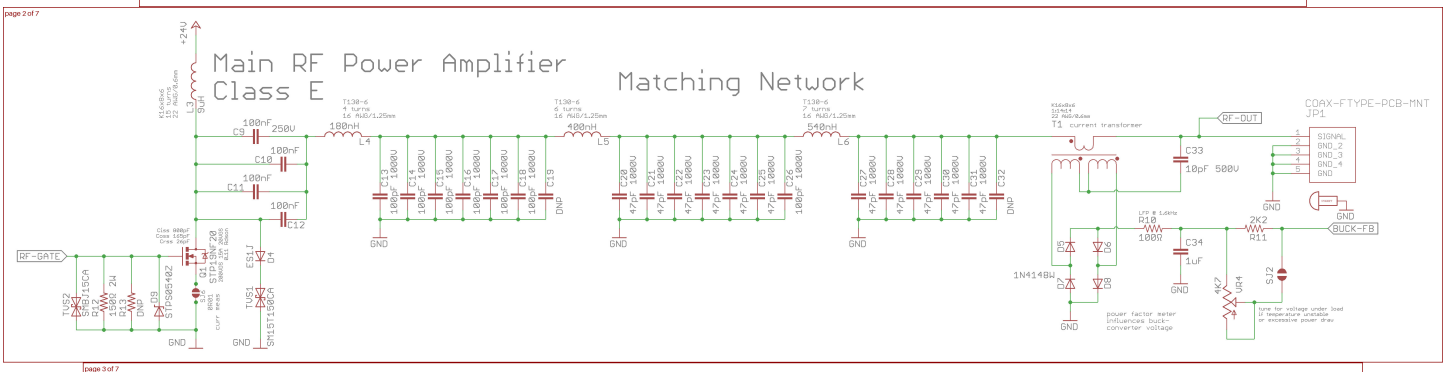
page 2 of 7
Main RF Power Amplifier
Class E
Matching Network
L7 9uH
C9 100nF 250V
C10 100nF
C11 100nF
C12 100nF
T130-6
4 turns
16 AWG/1.25mm
100nH
L4
400nH
L5
540nH
L6
C13 100pF 1000V
C14 100pF 1000V
C15 100pF 1000V
C16 100pF 1000V
C17 100pF 1000V
C18 100pF 1000V
C19 DNP
C20 470pF 1000V
C21 470pF 1000V
C22 470pF 1000V
C23 470pF 1000V
C24 470pF 1000V
C25 470pF 1000V
C26 470pF 1000V
C27 470pF 1000V
C28 470pF 1000V
C29 470pF 1000V
C30 470pF 1000V
C31 470pF 1000V
C32 DNP
T1 current transformer
RF-OUT
C33 10pF 500V
COAX-FTYPE-PCB-MNT
JP1
SIGNAL
GND_2
GND_3
GND_4
GND
RF-GATE
TVS2 SMBJ15CA
R72 100Ω 2W
R73 100Ω 2W
D9 DNP
S7 TPS85402
Q1 IRLHF7928
D4 ES1J
TVS1 SM15T100CA
R10 100Ω
C34 1uF
2K2
R11
BUCK-FB
D5
D6
D7
D8
1N4148W
4K7
VR4
SJ2
power factor meter influences buck-converter voltage
tune for voltage under load if temperature unstable or excessive power draw

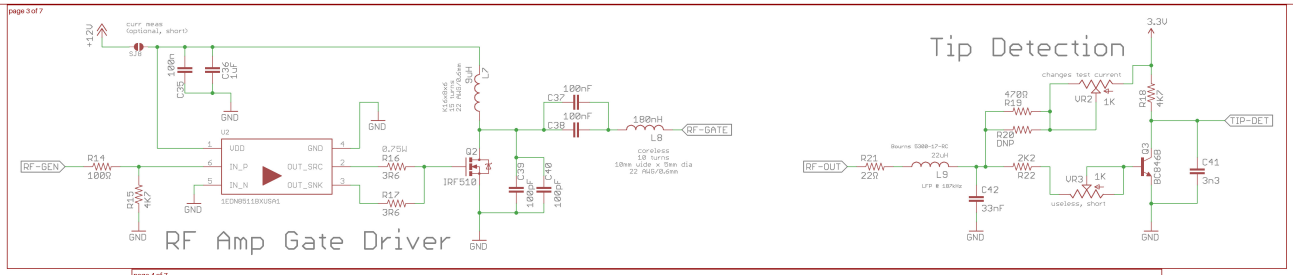
page 3 of 7
RF Amp Gate Driver
Tip Detection
curr meas (optional, short)
SJ6
C35 100n
C36 1u
L7 9uH
C37 100nF
C38 100nF
180nH
L8
RF-GATE
coreless
10 turns
10mm wide x 5mm dia
22 AWG/0.6mm
RF-GEN
R14 100Ω
R15 4K7
U2
VDD
IN_P
IN_N
GND
OUT_SRC
OUT_SNK
1ED0911BXUSA1
R16 3R6
0.75W
R17 3R6
Q2 IRF510
C39 100n
C40 100pF
3.3V
changes test current
R18 4K7
R19 470Ω
VR2 1K
R20 DNP
TIP-DET
RF-OUT
R21 22Ω
Bourns 5300-17-RC
L9 22uH
LFP @ 18MHz
R22 2K2
VR3 1K
useless, short
Q3 BS94B
C41 3n3
C42 33nF

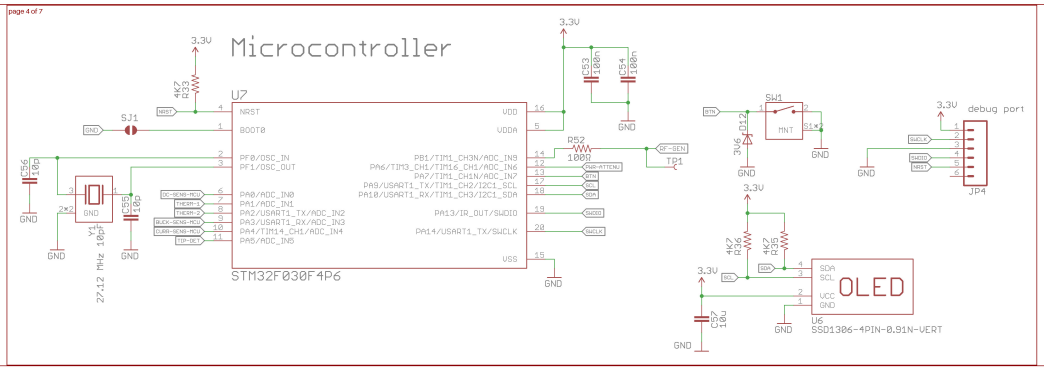
page 4 of 7
Microcontroller
3.3V
R23 4K7
NRST
SJ1
GND
U7
BOOT0
PF0/OSC_IN
PF1/OSC_OUT
PA0/ADC_IN0
PA1/ADC_IN1
PA2/USART1_TX/ADC_IN2
PA3/USART1_RX/ADC_IN3
PA4/TIM14_CH1/ADC_IN4
PA5/ADC_IN5
DC-SENS-MCU
THERM-1
THERM-2
BUCK-SENS-MCU
CURR-SENS-MCU
TIP-DET
VDD
VDDA
PB1/TIM1_CH3N/ADC_IN8
PA6/TIM3_CH1/TIM16_CH1/ADC_IN6
PA7/TIM1_CH1N/ADC_IN7
PA9/USART1_TX/TIM1_CH2/I2C1_SCL
PA10/USART1_RX/TIM1_CH3/I2C1_SDA
PA13/IR_OUT/SWDIO
PA14/USART1_TX/SWCLK
VSS
STM32F030F4P6
C53 100n
C54 100n
R52 100Ω
RF-GEN
TP1
PWR-ATTENU
SCL
SDA
SWDIO
SWCLK
C56 10p
X1 27.12 MHz
C55 10p
SW1
MNT
D12 3V6
debug port
JP4
R36 4K7
R35 4K7
OLED
U6
SSD1306-4PIN-0.91N-VERT
C57 10u

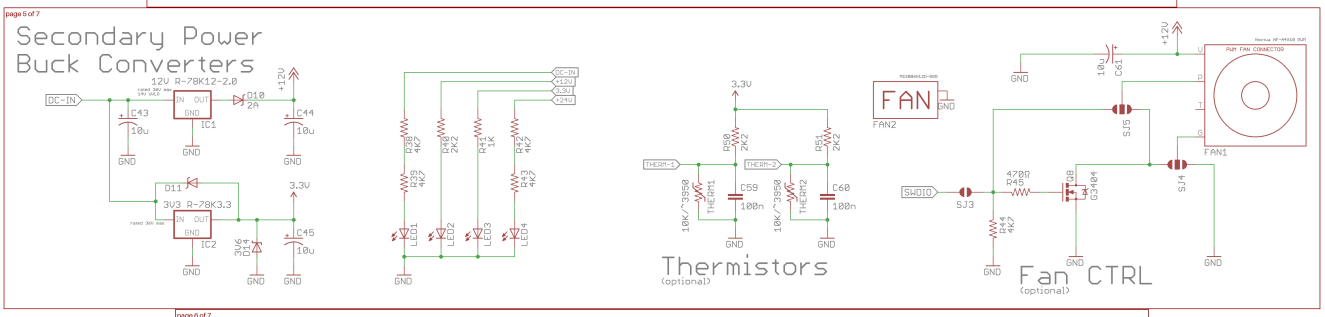
page 5 of 7
Secondary Power
Buck Converters
12V R-78K12-2.0
DC-IN
C43 10u
IC1
D10 2A
+12V
C44 10u
D11
3V3 R-78K3.3
IC2
3V6 D14
C45 10u
3.3V
R38 4K7
R39 4K7
R40 2K2
R41 1K
R42 4K7
R43 4K7
LED1
LED2
LED3
LED4
R50 2K2
R51 2K2
THERM-1
THERM-2
10K/3950
THERM1
THERM2
C59 100n
C60 100n
Thermistors
(optional)
FAN
FAN2
C61 10u
SJ5
FAN1
SWDIO
SJ3
470Ω R45
Q3 G3404
SJ4
R44 4K7
Fan CTRL
(optional)

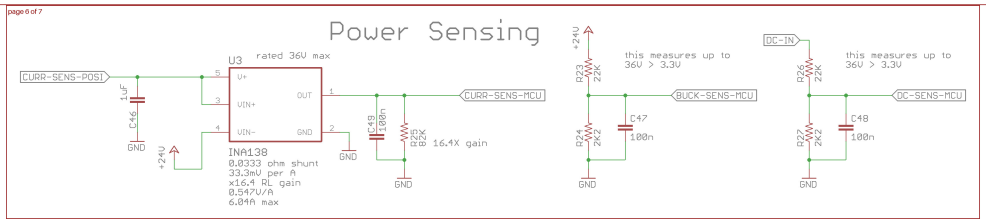
page 6 of 7
Power Sensing
rated 36V max
CURR-SENS-POSI
C46 1uF
U3
U+
VIN+
VIN-
OUT
GND
INA138
0.033Ω ohm shunt
33.3mV per A
x16.4 RL gain
0.547V/A
6.04A max
C49 100n
R25 82K
16.4X gain
CURR-SENS-MCU
R23 2K2
R24 2K2
this measures up to
36V > 3.3V
BUCK-SENS-MCU
C47 100n
DC-IN
R26 2K2
R27 2K2
DC-SENS-MCU
C48 100n
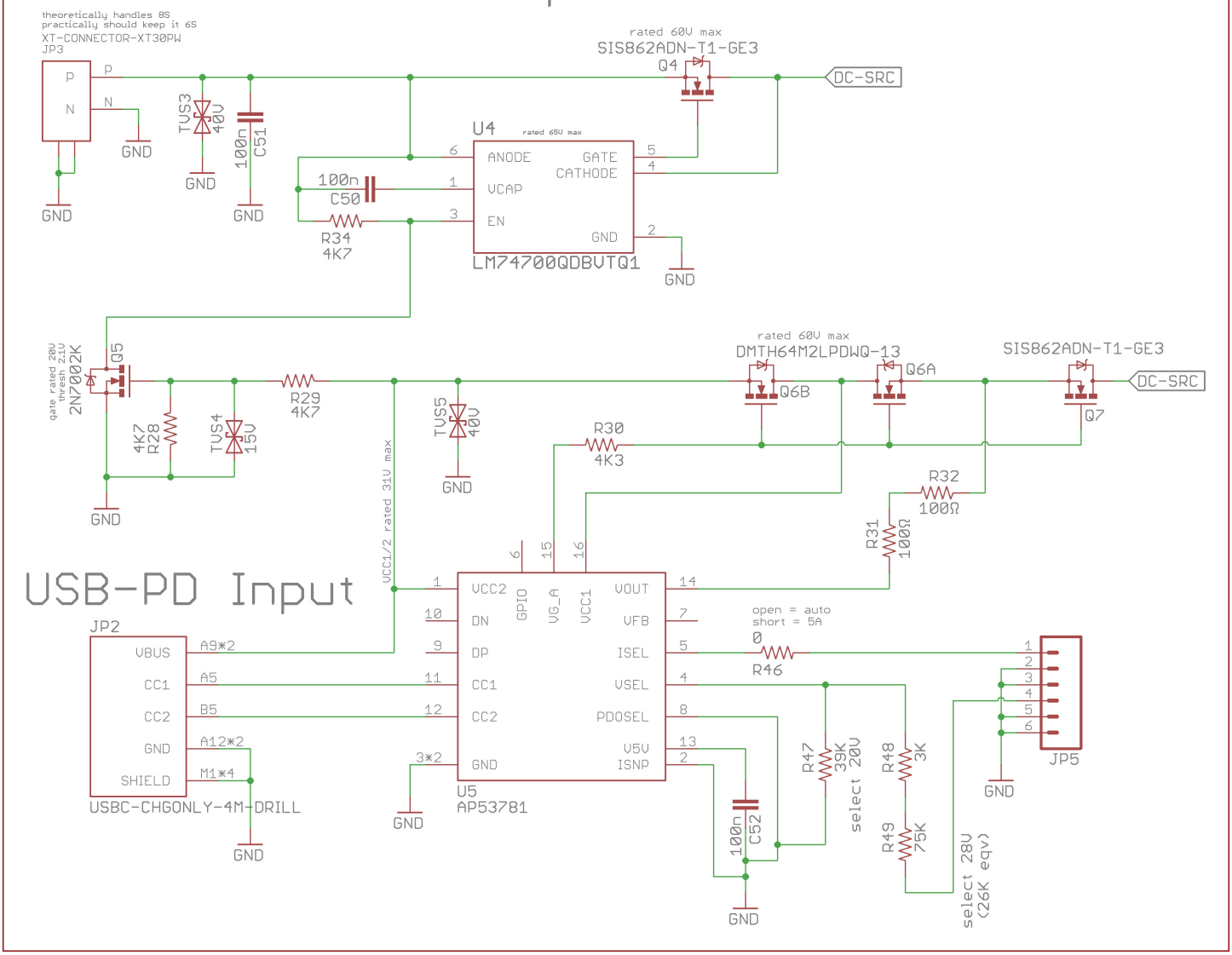
XT-30 DC Input