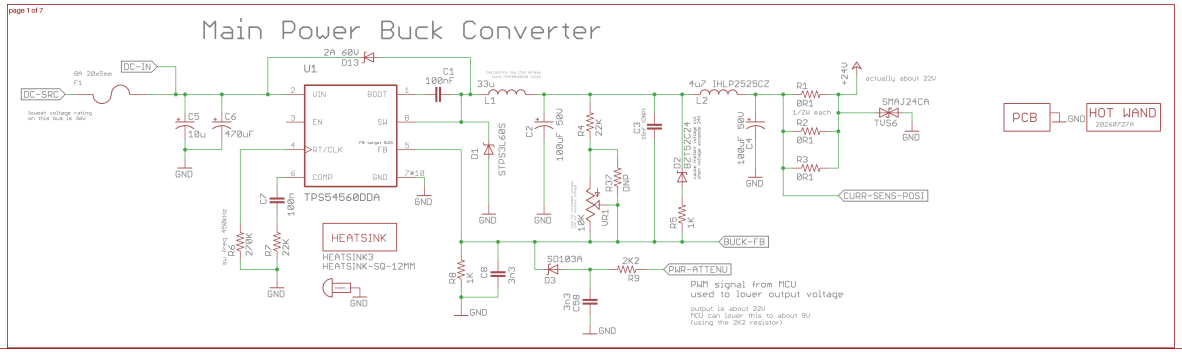
page 1 of 7
Main Power Buck Converter
DC-IN
DC-SRC
8A 20x5mm
F1
lowest voltage rating on this bus is 36V
2A 60V
D13
U1
VIN
BOOT
EN
SW
RT/CLK
FB
COMP
GND
TPS54560DDA
C1 100nF
33u
L1
C5 10u
C6 470uF
C7 100n
R6 270K
R7 22K
D1
STPS3L60S
C2 100uF 50V
R4 22K
R37 DNP
VR1 10K
C3 DNP
D2 BZ13ZC24
R5 1K
4u7 IHLP2525CZ
L2
R1 0R1 1/2W each
R2 0R1
R3 0R1
+24V
actually about 22V
SMAJ24CA
TVS6
PCB
HOT WAND
20260727A
CURR-SENS-POSI
BUCK-FB
HEATSINK
HEATSINK3
HEATSINK-SQ-12MM
R8 1K
C8 3n3
D3 SD103A
R9 2K2
PWR-ATTENU
C39 3n3
PWM signal from MCU
used to lower output voltage
output is about 22V
MCU can lower this to about 9V
(using the 2K2 resistor)
GND

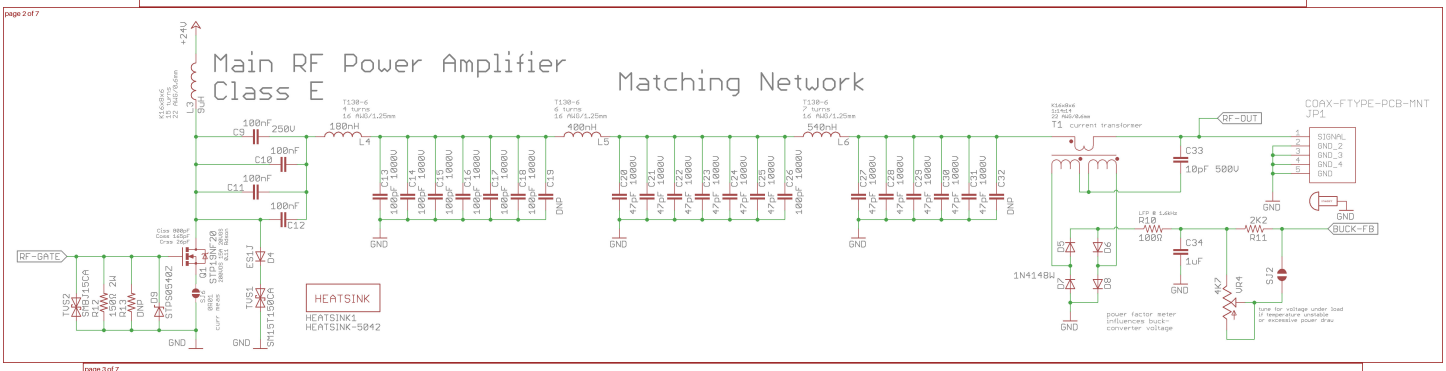
page 2 of 7
Main RF Power Amplifier
Class E
Matching Network
+24V
L3 9uH
C9 100nF 250V
C10 100nF
C11 100nF
C12 100nF
T130-6
4 turns
16 AWG/1.25mm
180nH
L4
400nH
L5
540nH
L6
C13 1000pF
C14 1000pF
C15 1000pF
C16 1000pF
C17 1000pF
C18 1000pF
C19 1000pF
C20 470pF
C21 470pF
C22 470pF
C23 470pF
C24 470pF
C25 470pF
C26 470pF
C27 470pF
C28 470pF
C29 470pF
C30 470pF
C31 470pF
C32 470pF
RF-GATE
TVS2 SMBJ15CA
R12 100K 2W
R13 100K 2W
D9 STPS05402
Q1 STD1NF20
ES1J D4
TVS1 SM15T100CA
HEATSINK
HEATSINK1
HEATSINK-5042
T1 current transformer
RF-OUT
C33 10pF 500V
COAX-FTYPE-PCB-MNT
JP1
SIGNAL
GND_2
GND_3
GND_4
GND
R10 100Ω
C34 1uF
R11 2K2
BUCK-FB
D5
D6
D7
D8
1N4148W
VR4 4K7
SJ2
power factor meter
influences buck-
converter voltage
tune for voltage under load
if temperature unstable
or excessive power draw
GND

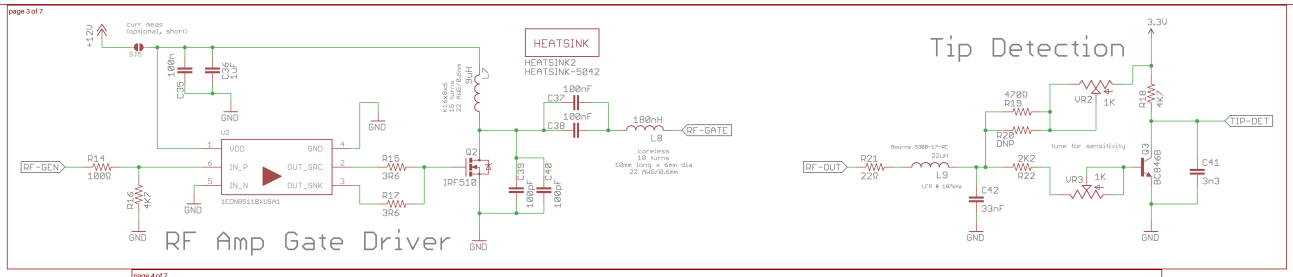
page 3 of 7
+12V
curr meas
(optional, short)
C35 100n
C36 1uF
U2
VDD
GND
IN_P
OUT_SRC
IN_N
OUT_SNK
LTC6811BXUSA1
RF-GEN
R14 100Ω
R16 4K7
R15 3R6
R17 3R6
L7 9uH
HEATSINK
HEATSINK2
HEATSINK-5042
C37 100nF
C38 100nF
L8 180nH
coreless
10 turns
10mm long x 6mm dia
22 AWG/0.6mm
RF-GATE
Q2 IRF510
C39 100pF
C40 100pF
RF Amp Gate Driver
Tip Detection
3.3V
R18 4K7
470Ω
R19
VR2 1K
R20 DNP
tune for sensitivity
TIP-DET
RF-OUT
R21 22Ω
Bourns 5300-17-RC
22uH
L9
LPF @ 10MHz
R22 2K2
VR3 1K
Q3 BS94B
C41 3n3
C42 33nF
GND

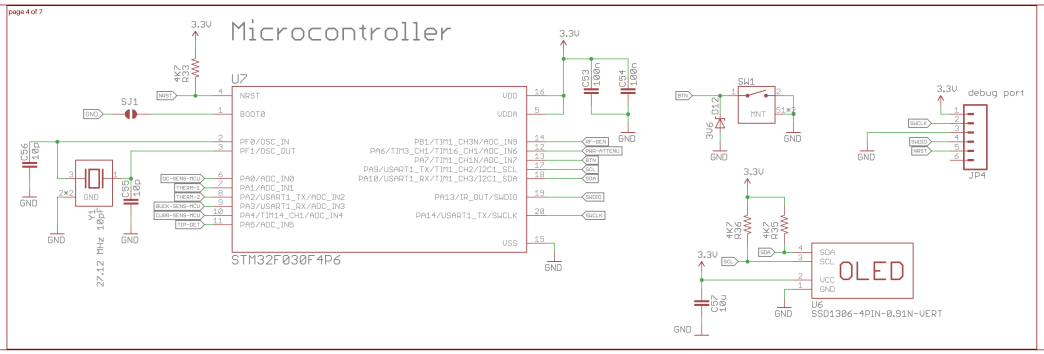
page 4 of 7
Microcontroller
3.3V
4K7 R23
NRST
U7
SJ1
BOOT0
PF0/OSC_IN
PF1/OSC_OUT
C56 10p
Y1 10pF
27.12 MHz
PA0/ADC_IN0
PA1/ADC_IN1
PA2/USART1_TX/ADC_IN2
PA3/USART1_RX/ADC_IN3
PA4/TIM14_CH1/ADC_IN4
PA5/ADC_IN5
DC-SENS-MCU
THERM-1
THERM-2
BUCK-SENS-MCU
CURR-SENS-MCU
TIP-DET
VDD
VDDA
PB1/TIM1_CH3N/ADC_IN8
PA6/TIM3_CH1/TIM16_CH1/ADC_IN6
PA7/TIM1_CH1N/ADC_IN7
PA9/USART1_TX/TIM1_CH2/I2C1_SCL
PA10/USART1_RX/TIM1_CH3/I2C1_SDA
PA13/IR_OUT/SWDIO
PA14/USART1_TX/SWCLK
VSS
RF-GEN
PWR-ATTENU
BTN
SCL
SDA
SWDIO
SWCLK
STM32F030F4P6
C53 100n
C54 100n
BTN
SW1
MNT
R12 3K6
debug port
JP4
R26 4K7
R35 4K7
OLED
SDA
SCL
VCC
GND
U6
SSD1306-4PIN-0.91N-VERT
C57 10u

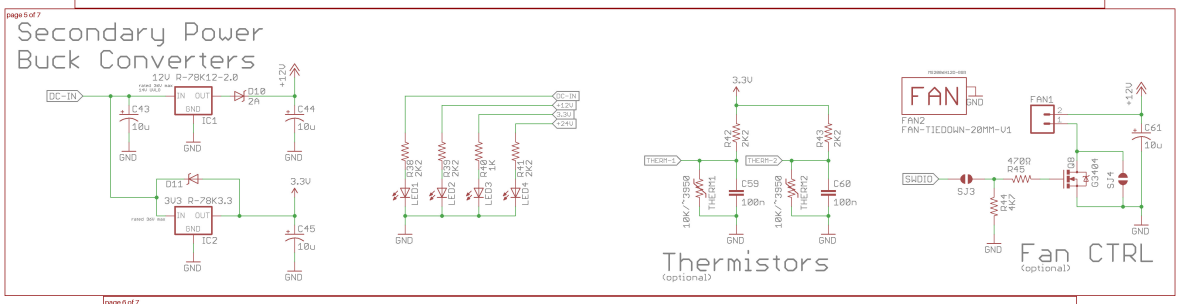
page 5 of 7
Secondary Power
Buck Converters
DC-IN
12V R-78K12-2.0
rated 36V max
1W DAZ
IN
OUT
GND
IC1
D10 2A
+12V
C43 10u
C44 10u
D11
3V3 R-78K3.3
IC2
3.3V
C45 10u
LED1 R38 2K2
LED2 R39 2K2
LED3 R40 1K
LED4 R41 2K2
+24V
THERM-1
THERM-2
R42 2K2
R43 2K2
10K/3950
THERM1
THERM2
C59 100n
C60 100n
Thermistors
(optional)
FAN
FAN2
FAN-TIEDOWN-20MM-V1
FAN1
C61 10u
SWDIO
SJ3
R44 4K7
R45 470Ω
Q4 G3404
SJ4
Fan CTRL
(optional)

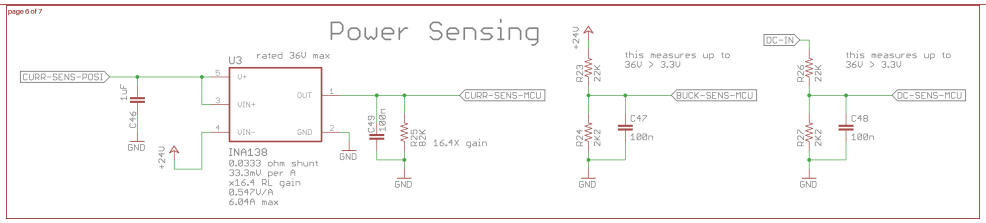
page 6 of 7
Power Sensing
CURR-SENS-POSI
U3
rated 36V max
U+
VIN+
VIN-
OUT
GND
C46 1uF
+24V
INA138
0.0333 ohm shunt
33.3mV per A
x16.4 RL gain
0.547V/A
6.04A max
C49 100n
R25 82K
16.4X gain
CURR-SENS-MCU
R23 2K2
R24 2K2
this measures up to
36V > 3.3V
BUCK-SENS-MCU
C47 100n
DC-IN
R26 2K2
R27 2K2
DC-SENS-MCU
C48 100n
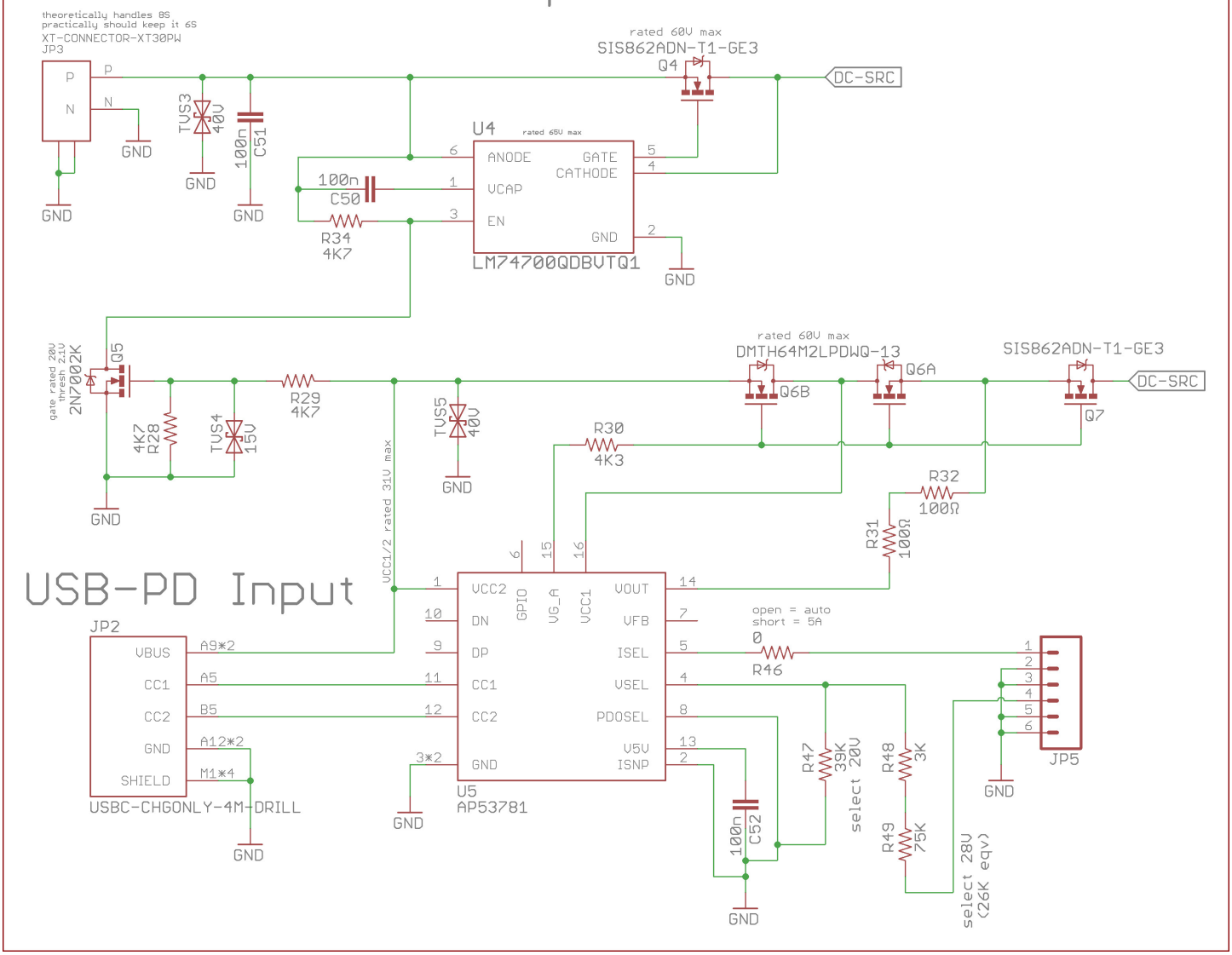
XT-30 DC Input