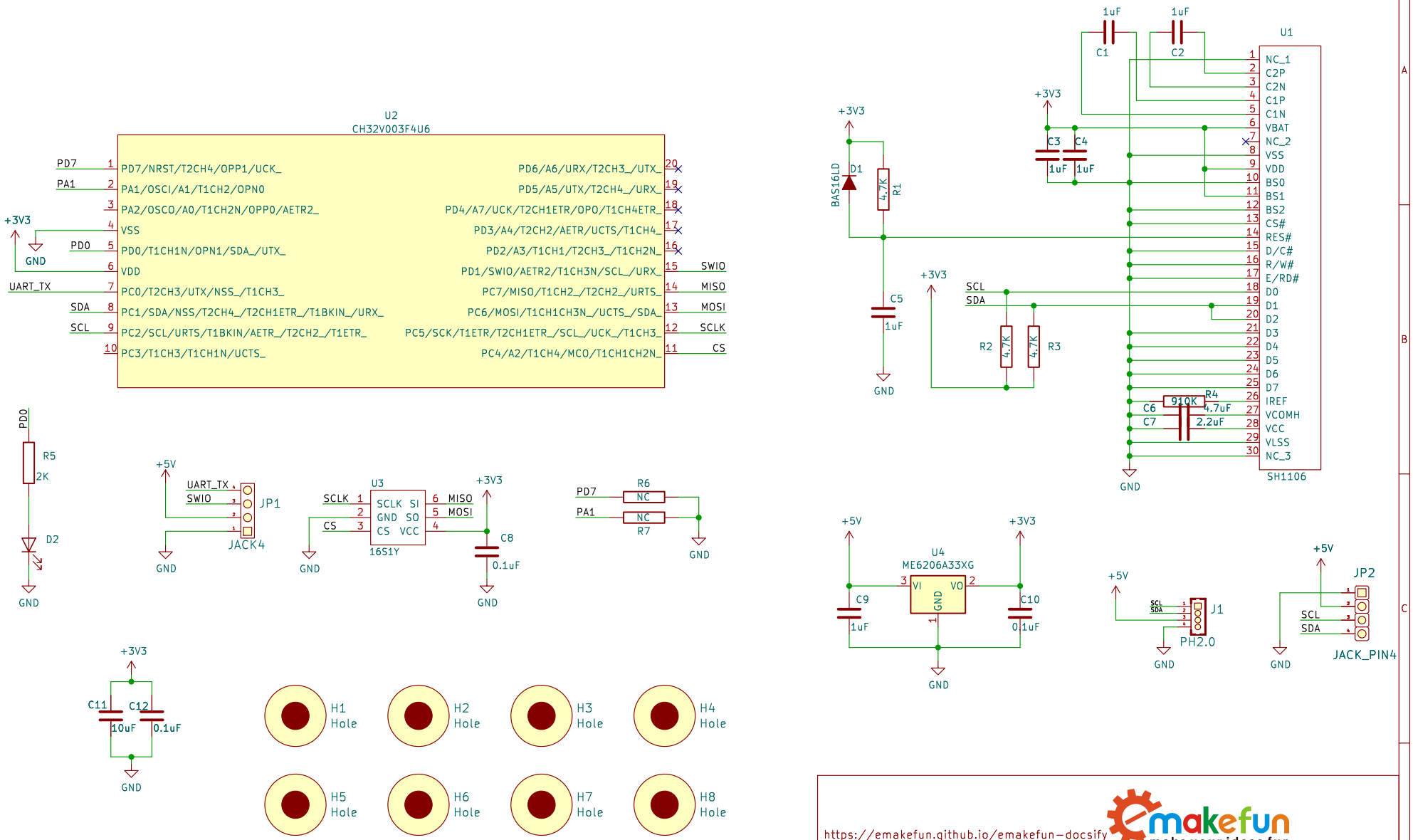

https://emakefun.github.io/emakefun-docsify

emakefun

Sheet: /

File: SH1106_1.3_inch_OLED.kicad_sch

Title: SH1106_1.3_inch_OLED

Size: A4	Date:	**Rev: V1.0**
KiCad E.D.A. 8.0.9		Id: 1/1