GAME 1157·E
FO 634

Bally®

SILVERBALL MANIA

© BALLY MFG. CORP. 1979
ALL RIGHTS RESERVED

Bally®

PINBALL DIVISION

This document has been downloaded from:
FLIPPERSPILL.COM

90 O'Leary Drive, Bensenville, Illinois 60106, U.S.A.
Telephone: (312) 860-6400

GAME #1157 SILVERBALL MANIA

Installation and General Game Operation Instructions

INDEX

		PAGE
I.	INSTALLATION	1
II.	GENERAL GAME OPERATION	2
III.	BOOKKEEPING FUNCTIONS	3
IV.	FEATURE OPERATION AND SCORING	4
V.	GAME ADJUSTMENTS	5
	A. PLAYFIELD ADJUSTMENTS	5
	B. BACKBOX ADJUSTMENTS	5
	CREDITS/COIN	5
	MAXIMUM CREDITS	6
	BALLS/GAME	6
	MATCH FEATURE OPTION	6
	CREDIT DISPLAY	6
	HIGH SCORE FEATURE OPTION	6
	HIGH SCORE TO DATE	6
	GAME FEATURE OPTIONS	7
	SOUND OPTION	7
	C. FRONT DOOR GAME ADJUSTMENTS	
	HIGH SCORE FEATURE	8
	HIGH SCORE TO DATE FEATURE	8
VI.	RECOMMENDED SCORE CARDS	11
VII.	RECOMMENDED SETTINGS	12
VIII.	ROUTINE MAINTENANCE ON LOCATION	13
IX.	TROUBLE SHOOTING ON LOCATION	13
X.	SERVICE/PARTS	19
XI.	PARTS LIST	20-31

BLOCK DIAGRAM—ELECTRONIC PINBALL GAME

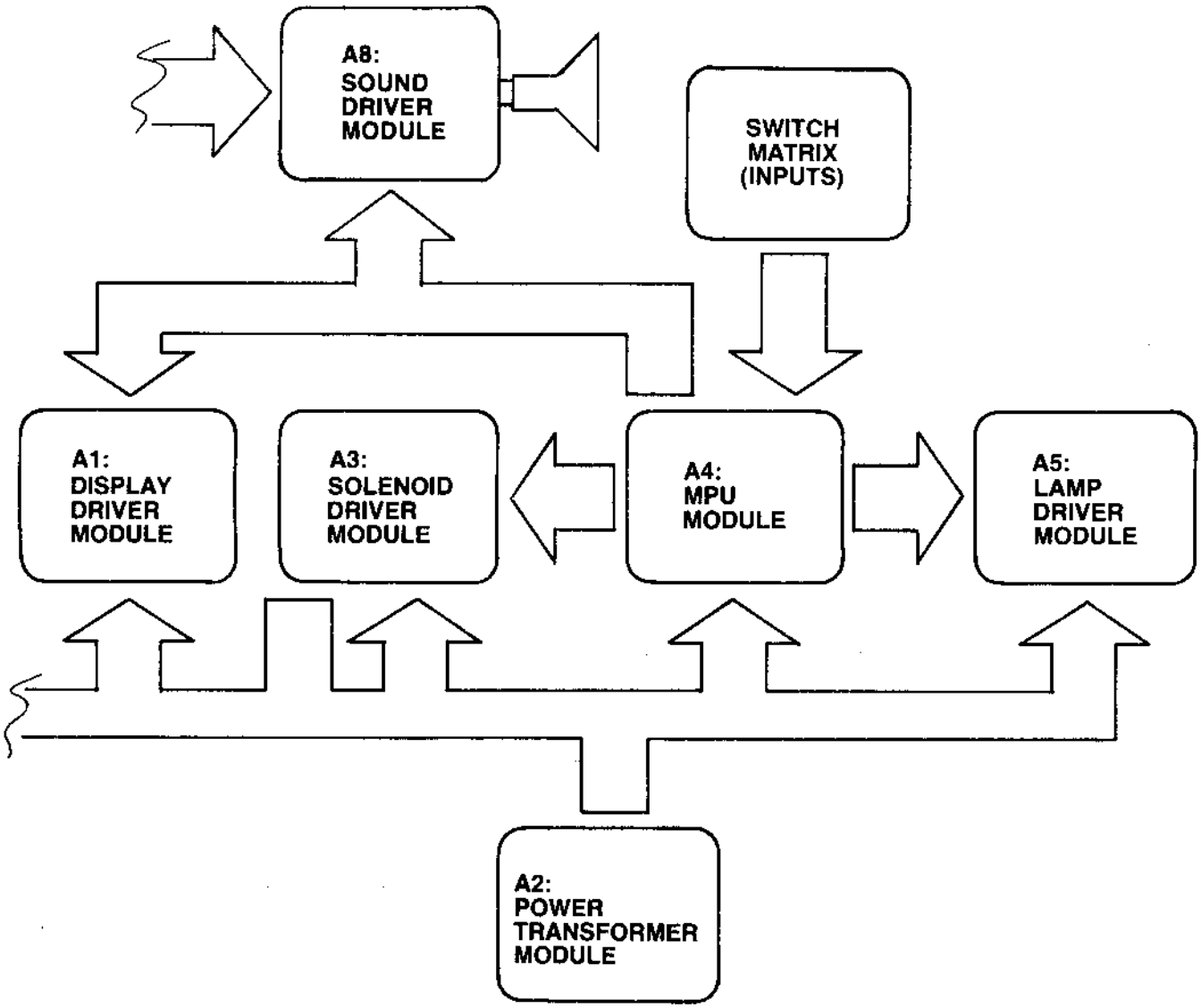

I. INSTALLATION

Assemble the game as follows:

Bolt legs to cabinet. Bolt back box to cabinet. Use flat washers under bolt heads. Gently feed cable connectors and ground braid through cable port in back box. Screw ground braid to braid in back box. Carefully and fully insert connectors on printed circuit assemblies.

On all games there are certain items that should be checked after shipment. These are visual inspections which may avoid time consuming service work later. Minor troubles caused by abusive handling in shipment are unavoidable. Cable connectors may be loosened, switches (especially tilt switches) may go out of adjustment. Plumb bob tilt switch should always be adjusted after game is set on location and leg levelers are adjusted.

Visual inspections before plugging in line cord:

1. Check that all cable connectors are completely seated on printed circuit assemblies.
2. Check that cables are clear of all moving parts.
3. Check for any wires that may have become disconnected.
4. Check switches for loose solder or other foreign material that may have come loose in shipment and could cause shorting of contacts.
5. Check wires on coils for proper soldering. Cold solder connections may not show up in factory inspection, but vibration in shipment may break contact.
6. Check that fuses are firmly seated and making good contact.
7. Check the transformer for any foreign material shorting across wiring lugs.
8. Check wiring of transformer to correspond to location voltage. See figure 1.

Check adjustment of the three (normally open) tilt switches:

1. Panel tilt on bottom of playfield panel.
2. Plumb bob tilt on left side of cabinet near front door.
3. Ball tilt above plumb bob tilt. Insert the smaller ball (15/16″ dia.) into the ball tilt assembly, and adjust the bracket so the ball will roll free to contact the switch blade, if front of cabinet is raised.

TRANSFORMER CONNECTION INSTRUCTIONS

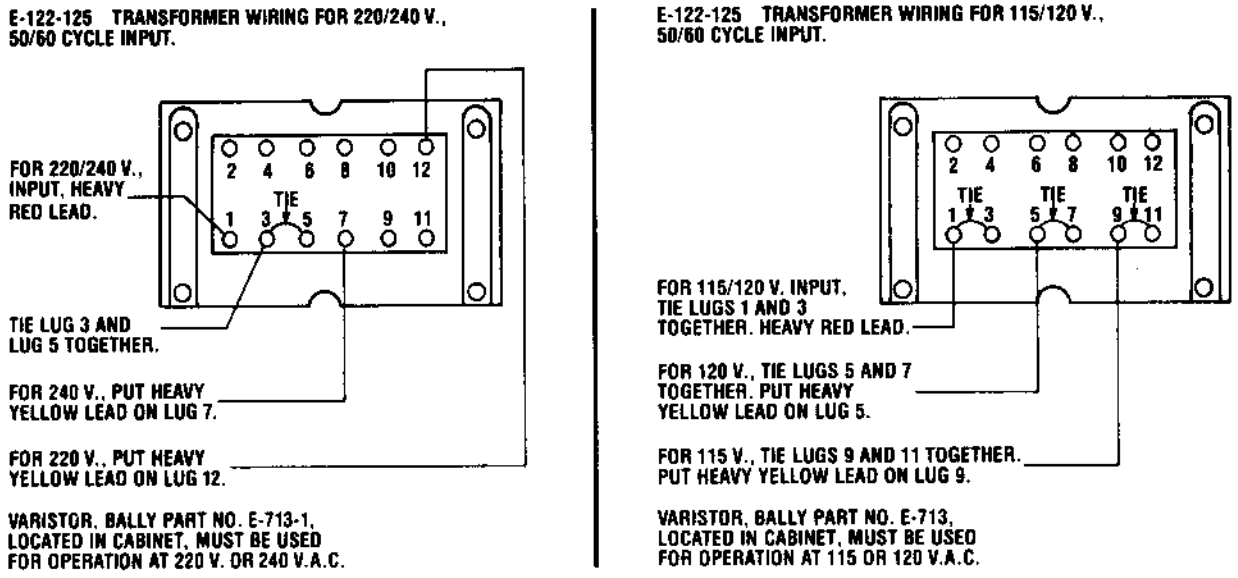

FIGURE I. TRANSFORMER

(PART OF POWER—TRANSFORMER MODULE A2, LOCATED IN BACK BOX).

II. GENERAL GAME OPERATION

Place ball into playfield by outhole.

Coin game. Coin should be rejected. Plug in line cord. Move power ON-OFF master switch at bottom right front corner of cabinet to 'ON' position. The game will play a power-up tune to announce game-readiness. Drop targets are reset, scores are set to zero, alternating with the 'High Score to Date', and the game is ready for play. Coin game. The game should accept the coin and post credits* for coins accepted (adjustable). Pressing the credit button on the door will cause the outhole kicker to serve the ball to the shooter alley. The 1st player-up lite is lit. A game-up tune* is played to announce play-readiness. The bonus score is advanced to 1000 points.

One player is posted each additional time the credit button is pressed (one to four can play). The credits are reduced by one each time the credit button is pressed until the credits are reduced to zero.

Shooting the ball initiates play. Rebound switches score 10 points. Thumper-bumpers, when not lit, score 10 points.

The game awards all points earned by the player. If spinner is turning and scoring when the ball hits a target, the spinner and the target scores are awarded.

When the ball enters the outhole, the bonus score is added to the total score. The player-up and/or ball in play on the back box is advanced one position. The bonus score is advanced to 1000 points. The outhole kicker serves the ball to the shooter alley and play is resumed. This continues until each player has played the allowable number of balls per game (adjustable). At this time the 'Game Over' light is lit. A random Match* number appears and the 'Match' light is lit. If the number is the same as the last two digits in a player's score, a free game is awarded.

Extra balls won during the course of the game are played immediately after the player's regular ball enters the outhole. The player-up and/or ball in play on the back box are not advanced for extra ball play. Bonus score is added to the player's score and the bonus is set to 1000 points before the game serves the extra ball for play.

Scoring over 1,000,000 gives "High Score to Date" award.
At the end of the game, a 'High Score to Date' is alternately flashed with all 4 player scores. If the 'High Score to Date' is beat, this feature* awards free games.

Tilting the game results in loss of a ball. The flippers, thumper-bumpers, etc., go 'dead.' Bonus points are not scored. The purpose of the tilt penalty is to discourage the player from jostling the machine in an attempt to prolong play. Game action becomes normal after the ball kicker assembly serves the ball to the shooter alley.

Slamming the machine results in loss of the game. All feature lights go out, the game goes 'dead,' and a time delay occurs. The purpose of the time delay is to discourage unnecessary abuse of the machine. After the delay, the 'Game Over' light lites and the power-up tune is played. The time delay occurs anytime one of the slam switches is made to contact. There is one factory installed slam switch on the front door. (Any number of slam switches could be installed by the operator, to meet his individual requirement.) The switch should be adjusted to have approximately 1/16" gap between the contacts. The weighted blade should be adjusted to attain the desired sensitivity. Decreasing the gap between contacts will make the switch more sensitive. Opening the gap will reduce sensitivity.

*Some tunes and features can be disabled by operator if so desired. See Back Box Adjustments.

III. BOOKKEEPING FUNCTIONS

The game is designed to help the operator certain perform accounting functions. The game can display the number of total plays and replays (free games). It can display the number of coins dropped down each coin chute. The bookkeeping functions are displayed on all player score displays simultaneously. An identification number, 05 to 14. appears on the Match/Ball in Play window as follows:

05— 00 to— 40=Current Credits
*06—10000 to—99999=Total Plays (Payed & Free Games)
*07—10000 to—99999=Total Replays (Free Games)
08— 00 to—99999=Total times 'High Score to Date' is beat
*09—10000 to—99999=Coins Dropped thru Coin Chute #1
*10—10000 to—99999=Coins Dropped thru Coin Chute #2**
*11—10000 to—99999=Coins Dropped thru Coin Chute #3**
*12— 00 to—99999=Number of Specials awarded from Panel Specials Only
*13— 00 to—99999=Number of minutes of Game Play
*14— 00 to—99999=Number of Service Credits

The game displays the first bookkeeping entry if the Self-Test button (See Fig. III) on the inside of the front door is pressed ten times. Alternately push and release the Self-Test button at one second intervals. The number 05 appears in the 'Match/Ball in Play' window. Current credits appear on the player score displays. Each additional press of the button causes the next entry to be displayed.

After the data in each bookkeeping register is recorded, it can be set to zero simply by pressing switch button S33, located on A4, the MPU module in the back box (See Fig. III), or by pressing the Coin Chute #3 switch. Any or all registers can be cleared by alternating between the Self-Test button and the switch button S33 on the MPU module or Coin Chute #3 switch. The operator is given this option as a possible convenience and can elect to use or not use it as his needs direct.

Pressing the button once more with the 14th entry displayed causes the game to play the power-up tune and light the Game Over light.

Service credits are designed to allow the serviceman to test the game under actual play conditions without disturbing the bookkeeping records that reside at identification numbers 06, 07, 09, 10 and 11.

To obtain Service Credits, push and release the Self-Test switch until identification number 05 appears in the 'Match/Ball in Play' window. Hold in the Credit button until the desired number of Service Credits (up to five) apears on the player score displays.

NOTE: If, upon accessing identification number 05, a number of credits greater than five is displayed, pressing the credit button has no effect.

Identification number 14 is reserved as a record of the number of Service Credits used.

*The 10,000 level is pre-set at the factory; can be set to zero, initially, if desired.

**If Coin Chute is not used in game, number displayed (if other than 00) on Player Score displays has no significance.

IV. FEATURE OPERATION & SCORING

A. MEMORY BONUS FEATURE

The outhole bonus on this game is not a result of a bonus being incremented by various targets or rollovers. Instead the bonus is a result of letters which, when let, are worth 1,000 points.

A bonus score of 1,000 to 44,000 may be scored. The bonus consists of fifteen letters which are labeled "SILVERBALL MANIA." Completing SILVERBALL MANIA the first time lights the Wizard Bonus Light which is worth 15,000 points; completing SILVERBALL MANIA the second time lights the Supreme Wizard Bonus Light which is worth 30,000 points. The next time SILVERBALL MANIA is completed, a special is awarded.

B. BONUS COLLECT AND BONUS MULTIPLIER

When the ball goes into the outhole, the lit bonus score is added to the player's total score. If the 2X light is lit, twice the amount is added to the player's score.

The bonus multipliers are increased by going through the center hoop.

C. SPOT LETTER FEATURE

When the ball goes through the center rollover, it spots the next letter in "SILVERBALL MANIA."

When the ball goes through the center hoop it spots the next letter or letters in "SILVERBALL MANIA" depending on how switch #24 is set.

Switch #24 Hoop Spot Letter Switch
On Liberal: Spots 2 Letters.
Off Conservative: Spots 1 Letter.

D. DISAPPEARING KICKER FEATURE

In this game there is a new feature which is located beneath the flippers. The feature consists of a kicker which when raised will kick the ball back into play if the ball goes through the center lower lane when lit.

This kicker is raised when a ball goes through either the top center lane or through the center hoop. It is lowered when the kicker is activated or when the ball goes into the outhole.

E. KICKER SPECIAL FEATURE

The disappearing kicker awards a special when the kicker is up and lit for special.

Switch #16 controls the kicker special light.

Switch #16 Kicker Special Switch
On Liberal: Comes on with SILVERBALL MANIA Special.
Off Conservative: Comes on After a SILVERBALL MANIA Special is made.

F. SILVERBALL MANIA SPECIAL

A Special is awarded for each time "SILVERBALL MANIA" is made when the SILVERBALL MANIA Special light is lit.

The SILVERBALL MANIA Special light is lit on the second completion of "SILVERBALL MANIA."

G. CENTER TARGET EXTRA BALL

The center target is lit for extra ball depending on the setting of Switch #32.

Switch #32 Extra Ball Switch
On Liberal: 5X and Extra Ball Lite Together
Off Conservative: 5X Then Extra Ball Lites.

Hitting Center target awards extra ball.

H. SILVERBALL CARRYOVER FEATURE

This feature consists of ten letters which, when lit, remain lit from game to game. When all are lit, a special is awarded. The number of credits depends on the setting of switch #8.

A letter is lit in SILVERBALL either by making a "SILVERBALL MANIA" special or by making a kicker special depending on the setting of Switch #15.

There is also a service switch located on the playfield, accessible thru the front door, to increment and test this feature.

This feature may be eliminated by Switch #23.

Switch #8 Carryover Award Liberal—Conservative
On: 3 Credits
Off: 1 Credit

Switch #15 Carryover Advance Liberal—Conservative
On: Liberal—Advance on SILVERBALL MANIA Special
Off: Conservative—Advance on Kicker Special

Switch #23 Carryover On-Off
On: Turns Feature On
Off: Turns Feature Off

I. SPECIAL REPLAY / X-BALL / NOVELTY MODES

Switch #6 and #7 give operator flexibility to award a replay, extra ball or score (Novelty) when a special is scored (SILVERBALL (Backglass), SILVERBALL MANIA, Bottom Kicker)

	SW. 6 ON	SW. 6 OFF	SW. 6 ON
SWITCH	SW. 7 ON	SW. 7 ON	SW. 7 OFF
Positions	REPLAY	X-BALL	NOVELTY
SILVERBALL MANIA Special	REPLAY	X-BALL*	50,000
SILVERBALL (Backglass) Special	REPLAY	X-BALL*	50,000
Kicker Special	REPLAY	X-BALL*	50,000
"N" Target X-Ball	X-BALL	X-BALL**	25,000
Scoring Thresholds	REPLAY	X-BALL**	NO AWARD

(*) 50,000 if Same Player Shoot Again is lit.
(**) 25,000 if Same Player Shoot Again is lit.

V. GAME ADJUSTMENTS

A. Playfield Panel Post Adjustments:

Posts that control left and right outlane opening on panel can be moved to make access to outlanes easier or harder for ball to enter. See Figure II.

Easier entry will decrease playing time and scoring (conservative).
Harder entry will increase playing time and scoring (liberal).

B. Back Box Game Adjustments:

Each game has thirty-two switches located on A4, the MPU module, located in the back box, that allow play to be customized to the location. See Figure III. Credits per coin, maximum credits, credit display, balls per game, match feature, high game feature, special award and melody are selectable by means of the switches. The switches are contained in four-sixteen lead packages numbered S1-8, S9-16, S17-24 and S25-32 for easy identification. The "ON" toggle position is marked on the assembly. **Turn off power before making adjustments.**

Credits/Coin Adjustments:

The credits per coin are selectable by means of S17-S20 for coin chute #2. The switch settings and resultant credits/coin are as follows:

S20	S19	S18	S17	Credits/Coin
OFF	OFF	OFF	OFF	Same as Coin Chute #1 Settings
OFF	OFF	OFF	ON	1/1 Coin
OFF	OFF	ON	OFF	2/1 Coin
OFF	OFF	ON	ON	3/1 Coin
OFF	ON	OFF	OFF	4/1 Coin
OFF	ON	OFF	ON	5/1 Coin
OFF	ON	ON	OFF	6/1 Coin
OFF	ON	ON	ON	7/1 Coin
ON	OFF	OFF	OFF	8/1 Coin
ON	OFF	OFF	ON	9/1 Coin
ON	OFF	ON	OFF	10/1 Coin
ON	OFF	ON	ON	11/1 Coin
ON	ON	OFF	OFF	12/1 Coin
ON	ON	OFF	ON	13/1 Coin
ON	ON	ON	OFF	14/1 Coin
ON	ON	ON	ON	15/1 Coin

The credits given per coin are selectable by means of switches 1-5 incl., for coin chute #1 and switches 9-13 incl., for coin chute #3. Thirty-one different credit ratios are available for each coin chute. The switch settings and resultant credits/coin are listed below.

CREDITS/COIN ADJUSTMENTS

COIN CHUTE	SWITCHES					CREDITS/COIN
#1 (HINGE SIDE)	5	4	3	2	1	
OR #3	13	12	11	10	9	
	OFF	OFF	OFF	OFF	OFF	3/2 COINS**
	OFF	OFF	OFF	OFF	ON	3/2 COINS**
	OFF	OFF	OFF	ON	OFF	1/COIN
	OFF	OFF	OFF	ON	ON	1/2 COINS*
	OFF	OFF	ON	OFF	OFF	2/COIN
	OFF	OFF	ON	OFF	ON	2/2 COINS*
	OFF	OFF	ON	ON	OFF	3/COIN
	OFF	OFF	ON	ON	ON	3/2 COINS*
	OFF	ON	OFF	OFF	OFF	4/COIN
	OFF	ON	OFF	OFF	ON	4/2 COINS*
	OFF	ON	OFF	ON	OFF	5/COIN
	OFF	ON	OFF	ON	ON	5/2 COINS*
	OFF	ON	ON	OFF	OFF	6/COIN
	OFF	ON	ON	OFF	ON	6/2 COINS*
	OFF	ON	ON	ON	OFF	7/COIN
	OFF	ON	ON	ON	ON	7/2 COINS*
	ON	OFF	OFF	OFF	OFF	8/COIN
	ON	OFF	OFF	OFF	ON	8/2 COINS*
	ON	OFF	OFF	ON	OFF	9/COIN
	ON	OFF	OFF	ON	ON	9/2 COINS*
	ON	OFF	ON	OFF	OFF	10/COIN
	ON	OFF	ON	OFF	ON	10/2 COINS*
	ON	OFF	ON	ON	OFF	11/COIN
	ON	OFF	ON	ON	ON	11/2 COINS*
	ON	ON	OFF	OFF	OFF	12/COIN
	ON	ON	OFF	OFF	ON	12/2 COINS*
	ON	ON	OFF	ON	OFF	13/COIN
	ON	ON	OFF	ON	ON	13/2 COINS*
	ON	ON	ON	OFF	OFF	14/COIN
	ON	ON	ON	OFF	ON	14/2 COINS*
	ON	ON	ON	ON	OFF	15/ COIN
	ON	ON	ON	ON	ON	15/2 COINS*

*No Credits until second coin is dropped
**One Credit for first coin. Two Credits for second coin provided that no scoring occured between 1st and 2nd coin drops. If scoring occured, second coin gives one credit

MAXIMUM CREDITS:

The maximum credits accepted by the machine limits the number of games that can be accumulated by coining, by winning replays or both. The maximum number of credits is selectable by means of switches 25 and 26. Four credit limits are available. Switch settings are listed below.

MAXIMUM CREDITS	SWITCHES 26	SWITCHES 25
10	OFF	OFF
15	OFF	ON
25	ON	OFF
40	ON	ON

BALLS PER GAME:

# BALLS/GAME	SWITCH 31
5	ON
3	OFF

MATCH FEATURE:

When the Match Feature is ON, a random number appears in the Match/Ball in Play window and the word MATCH is illuminated. If the number matches the tens digit in a player's score, a free game is awarded. The Match feature creates an incentive to play.

MATCH	SWITCH 28
ON	ON
OFF	OFF

CREDIT DISPLAY:

CREDITS DISPLAYED	SWITCH 27
YES	ON
NO	OFF

HIGH SCORE FEATURE:

The game is designed to award an Extra Ball or Free Game at each of the three score levels. See Front Door Game Adjustments.

AWARD	SWITCH 7	SWITCH 6
REPLAY	ON	ON
EXTRA BALL	ON	OFF
NO AWARD	OFF	ON

HIGH SCORE TO DATE OR OVER 1,000,000 SCORE FEATURE:

The game is designed to award free games as an option if high score to date is beat or player exceeds 1,000,000 points. Each time this happens, the winning score becomes the new high score to beat. This score is displayed on all 4 player score displays at the end of each game as an incentive to play. Recommended setting is underlined.

HIGH SCORE TO DATE FEATURE	SWITCH 22	SWITCH 21
No Award	OFF	OFF
One Credit	OFF	ON
Two Credits	ON	OFF
Three Credits	ON	ON

State and local laws may regulate the use of the above features, and they have been designed to allow for appropriate adjustment in order to conform to such requirements.

#1157 SILVERBALL MANIA

SOUND OPTION:

The game is designed to make several tones and noises to announce power-up, game-up, etc. The tones are intended to attract attention to the game and increase game usage. The tones are controlled by switch settings as shown.

SW. 29, 30 ON.
Playfield switches associated noises with background.

SW. 29 ON, SW. 30 OFF.
Playfield switches associated noises without background.

SW. 29, 30 OFF.
Most scoring will have a chime effect.

SW. 29 OFF, SW. 30 ON.
Most all scoring will have a noise effect.

GAME FEATURE OPTIONS:

Silverball (Backglass) replay adjustment:

Liberal	SW. 8 ON	Gives 3 replays.
Conservative	SW. 8 OFF	Gives 1 replay.

Silverball (Backglass) letter advance adjustment:

Liberal	SW. 15 ON	Steps 1 letter when Silverball Mania Special is made.
Conservative	SW. 15 OFF	Steps 1 letter when Kicker Special is made.

Silverball Mania and kicker special adjustment:

Liberal	SW. 16 ON	Silverball Mania and kicker special lite together.
Conservative	SW. 16 OFF	Kicker special lites after Silverball Mania.

Silverball (Backglass) control:

	SW. 23 ON	Turns the Silverball feature ON.
	SW. 23 OFF	Turns the Silverball feature OFF.

Center hoop advance letter feature adjustment:

Liberal	SW. 24 ON	Advances 2 letters.
Conservative	SW. 24 OFF	Advances 1 letter.

5X, extra ball lite adjustment:

Liberal	SW. 32 ON	5X and extra ball arrow lite together.
Conservative	SW. 32 OFF	5X lites first, then extra ball arrow.

C. FRONT DOOR GAME ADJUSTMENTS

High Score Feature Adjustments:

The game is designed to award an extra ball (option) or a free game at each of three score levels. The recommended levels are on the score card in the game.

Any level from 10,000 to 990,000 can be set, as desired. It is also possible to reset or turn off (00) any or all of the levels, if desired.

1. Push and release Self-Test button (See Figure III) at one second intervals approximately six times or until identification number 01 appears on the 'Match/Ball in Play' display.

2. The number on the Player Score Displays is the score level.* It can be increased, if desired, by holding the credit button in. To decrease the score level, hold the credit button in and depress and release the Self-Test button. Release the credit button when the desired number appears. Note that the level changes 10,000 points at a time. If the number '00' is left on the displays, the high score feature is eliminated for that level.

3. Repeat steps 1 and 2 for the second and third score levels. The identification numbers '02' and '03' on the Match/Ball in Play display are for the second and third levels, respectively.

High Score to Date and 1,000,000 Feature:

The game is designed to award free games when 'High Score to Date' is beat, or if the player exceeds 1,000,000 points.

It is recommended that the level, which will build with play, be periodically reset to the factory recommended level to encourage game play. The adjustment procedure is the same as for the High Score Feature Adjustment, Steps 1 and 2. Continue pushing the Self-Test button until the identification number '04' appears on the 'Match/Ball in Play' display and then do Step 2.

Any level from '00' to 990,000 can be set as described. It is to be noted that '00' does NOT turn off the feature, as it does on High Score feature. The feature is turned off by positioning switches as discussed under 'Back Box Game Adjustments.'

*Can be quickly set to '00' by pressing S33 on the MPU assembly in the back box or Coin Chute switch #3. (See Figure III).

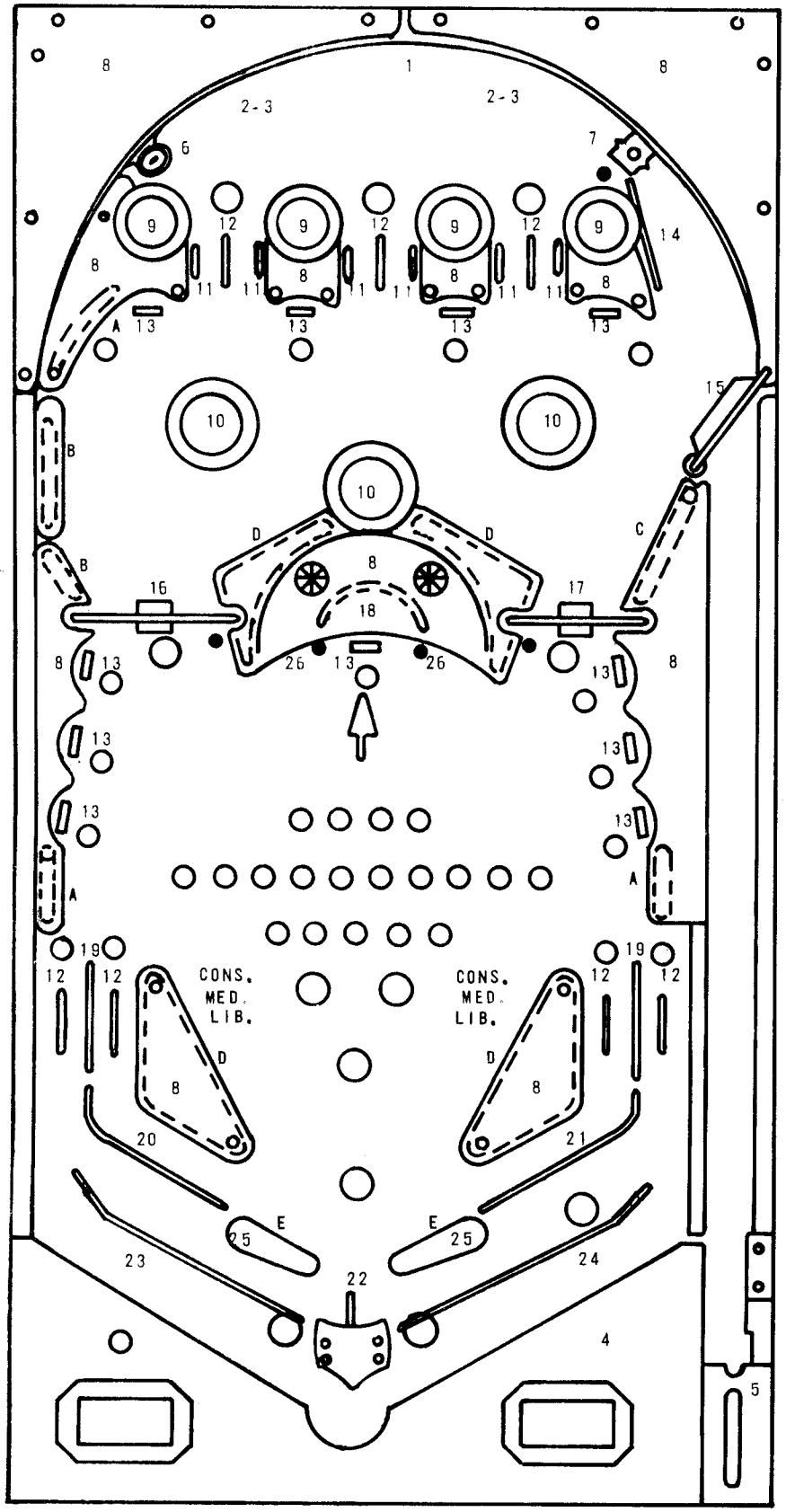

#1157 SILVERBALL MANIA

RUBBER PARTS

A	R-521-1	1″ Dia.	(3)
B	R-521-2	1½″ Dia.	(2)
C	R-521-3	2″ Dia.	(1)
D	R-521-4	2½″ Dia.	(4)
E	R-406-3	Flipper	(2)
F	R-243	5/16″ Dia.	(14)

PANEL TOP PARTS

1	Arch Rail	M-1774	
2	Rail Post	C-907	
3	Rail Post Cap	C-908	
4	Bottom Arch	P-5871-72	
5	Shooter Gauge	P-6359-38	
6	Ball Rebound Assy.	AS-493-6	
7	Ball Gate Assy.	A-1475-13	
8	Screened Plastic Set	M-1330-159	
9	Bumper Cap	A-3852-1	(4)
10	Thumper Bumper Cap	A-3713-58	(3)
11	Ball Guide Wire	M-121-32	(6)
12	Roll Over Wire Assy.	AS-2806	(7)
13	Target Assy. (yellow)	AS-2911-21	(11)
14	Ball Guide Wire	M-121-30	
15	Ball Gate & Wire	AS-2250-24	
16	Spinner Gate Assy.	AS-2250-61	
17	Spinner Gate Assy.	AS-2250-62	
18	Ball Guide Assy.	A-3032-34	
19	Ball Guide Wire	M-121-24	(2)
20	Ball Guide Wire	M-121-78	
21	Ball Guide Wire	M-121-79	
22	Disappearing Kicker Assy.	AS-3007	
23	Ball Guide Wire	M-121-91	
24	Ball Guide Wire	M-121-92	
25	Flipper & Shaft Assy.	AS-2214-24	(2)
26	Mini-Post Assy.	AS-2836-1	(8)

LIB. —Liberal
MED. —Medium
CONS.—Conservative

Indicates Movable Posts For Spring Adjustments.

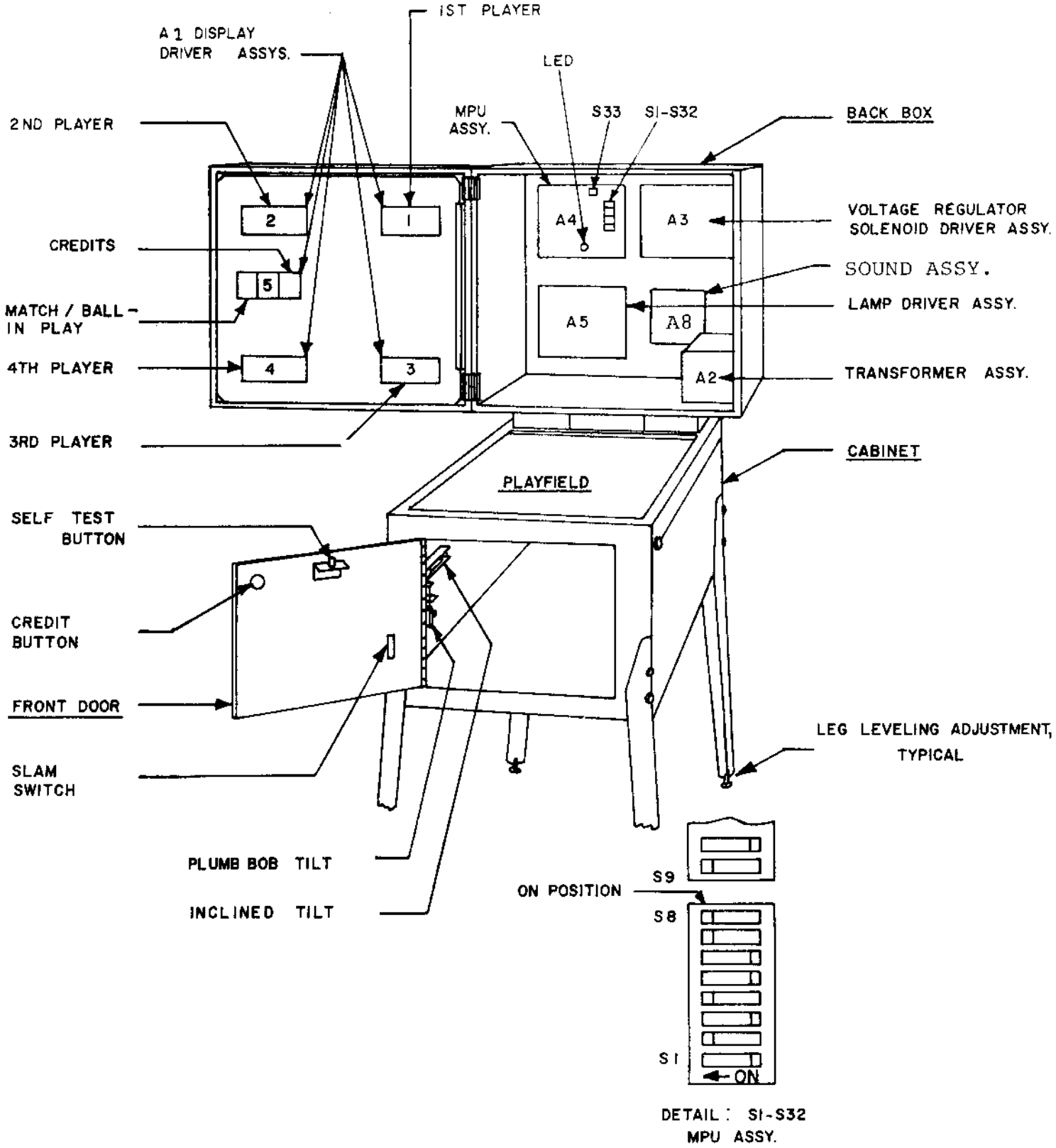

FIGURE III. ELECTRONIC PIN BALL MACHINE

RECOMMENDED

Instruction, Score Cards and High Score Feature Settings
to be used on **SILVERBALL MANIA 1157**

3-BALL

REPLAYS

Instruction Card	M-1508-87-G
Score Card	M-1508-87-B

1 Replay at 360,000
1 Replay at 600,000

5-BALL

REPLAYS

Instruction Card	M-1508-87-G
Score Card	M-1508-87-A

1 Replay at 580,000
1 Replay at 820,000

EXTRA BALL

Instruction Card	M-1508-87-O
Score Card	M-1508-87-SS

1 Extra Ball at 420,000
1 Extra Ball at 660,000
1 Extra Ball at 880,000

ADDITIONAL CARDS

REPLAYS

M-1508-H	120,000	360,000	
M-1508-I	140,000	380,000	
M-1508-J	160,000	400,000	
M-1508-K	180,000	420,000	
M-1508-L	200,000	440,000	
M-1508-M	220,000	460,000	
M-1508-N	240,000	480,000	
M-1508-O	260,000	500,000	
M-1508-P	280,000	520,000	
M-1508-Q	300,000	540,000	
M-1508-R	320,000	560,000	
M-1508-S	340,000	580,000	
M-1508-T	360,000	600,000	
M-1508-U	380,000	620,000	
M-1508-V	400,000	640,000	
M-1508-W	420,000	660,000	
M-1508-X	440,000	680,000	
M-1508-Y	460,000	700,000	
M-1508-AA	140,000	430,000	580,000
M-1508-BB	160,000	450,000	600,000
M-1508-CC	180,000	470,000	620,000
M-1508-DD	200,000	490,000	640,000
M-1508-EE	220,000	510,000	660,000
M-1508-FF	240,000	530,000	680,000
M-1508-GG	260,000	550,000	700,000
M-1508-HH	280,000	570,000	720,000
M-1508-II	300,000	590,000	740,000
M-1508-JJ	320,000	610,000	760,000
M-1508-KK	340,000	630,000	780,000
M-1508-LL	360,000	650,000	800,000

EXTRA BALL

M-1508-MM	240,000	480,000	700,000
M-1508-NN	270,000	510,000	730,000
M-1508-OO	300,000	540,000	760,000
M-1508-PP	330,000	570,000	790,000
M-1508-QQ	360,000	600,000	820,000
M-1508-RR	390,000	630,000	850,000
M-1508-SS	420,000	660,000	880,000

Instruction Card, Novelty
M-1508-87-P

Instruction Cards

M-1508-87-F	M-1508-87-K
M-1508-87-G	M-1508-87-L
M-1508-87-H	M-1508-87-M
M-1508-87-I	M-1508-87-N
M-1508-87-J	

BLANKS (3)

High game to date recommended levels;
(reset periodically)
3 BALL 700,000
5 BALL 900,000

#1157 SILVERBALL MANIA

RECOMMENDED SETTINGS

SPECIAL : REPLAY		3 BALL	5 BALL
	SW. 6	ON	ON
	SW. 7	ON	ON
SILVERBALL BACKGLASS REPLAYS	SW. 8	OFF	OFF
SILVERBALL BACKGLASS ADVANCES	SW. 15	OFF	OFF
BOTTOM KICKER SPECIAL LITE	SW. 16	ON	ON
SILVERBALL BACKGLASS CONTROL	SW. 23	ON	ON
CENTER HOOP ADVANCES	SW. 24	OFF	OFF
5X, EXTRA BALL LITE	SW. 32	OFF	OFF

	3 BALL	5 BALL
REPLAY		
Instruction Card	M-1508-87-G	M-1508-87-G
Score Card	M-1508-87-B	M-1508-87-A
Major Mode	SW. 6, 7, ON	SW. 6, 7, ON
Match	SW. 28 ON	SW. 28 ON
High Score to Date	SW. 21, 22, ON	SW. 21, 22, ON
X-BALL		
Instruction Card		M-1508-87-O
Score Card		M-1508-87-A W/SS
Major Mode		SW. 6 OFF SW. 7 ON
Match		SW. 28 OFF
High Score to Date		SW. 21, 22, OFF
NOVELTY		
Instruction Card	M-1508-87-P	M-1508-87-P
Major Mode	SW. 6, 7 OFF	SW. 6, 7 OFF
Match	SW. 28 OFF	SW. 28 OFF
High Score to Date	SW. 21, 22, OFF	SW. 21, 22, OFF

ADDITIONAL CARDS FOR PAGE 11

REPLAYS

M-1508-UU	480,000	720,000
M-1508-VV	500,000	740,000
M-1508-WW	520,000	760,000
M-1508-XX	540,000	780,000
M-1508-YY	560,000	800,000
M-1508-ZZ	580,000	820,000
M-1508-AAA	600,000	840,000
M-1508-BBB	620,000	860,000
M-1508-CCC	640,000	880,000
M-1508-DDD	660,000	900,000
M-1508-EEE	380,000	670,000	820,000
M-1508-FFF	400,000	690,000	840,000
M-1508-GGG	420,000	710,000	860,000
M-1508-HHH	440,000	730,000	880,000
M-1508-III	460,000	750,000	900,000
M-1508-JJJ	480,000	770,000	920,000
M-1508-KKK	500,000	790,000	940,000
M-1508-LLL	520,000	810,000	960,000
M-1508-MMM	540,000	830,000	980,000
M-1508-NNN	560,000	850,000	990,000

VIII. ROUTINE MAINTENANCE ON LOCATION:

Self-Test routines are written into the game design. They are particularly useful for routine maintenance. The tests are described below. The first test is automatic and occurs on power-up. This test causes the MPU module A4 to examine itself for failures. Seven flashes of an LED indicates proper operation. The second series of self-diagnostic tests causes the MPU to 'exercise' each of the other modules in such a way as to make their faults, if any, obvious. See Figure III and Page ii.

It is recommended that these tests be used several times a week to check out the games before play. If faults are discovered, they may be corrected on location if the operator has a stock of replacement modules. See "Trouble Shooting on Location."

MPU Module Self-Test:

At power on, the LED on the MPU module flashes once. (Flicker-Flash). After a pause, it flashes six more times and goes out. A power-up tune is played to announce game readiness. This indicates proper MPU operating condition and successful completion of the power-up test.

Game Self-Diagnostic Tests:

1. Pressing the Self-Test button inside the door initiates the Self-Test routine. See Figures III and IV. All switched lamps flash off and on continuously.

2. Pressing the Self-Test button again causes each digit on each display to cycle from 0 thru 9, and repeat continuously.

3. Pressing the Self-Test button again causes each solenoid to be energized, one at a time, in a continuous sequence. Hold both flipper buttons 'in' during this test. The number appearing on the Player Score displays is the same as the number assigned to the solenoid. The sound of a solenoid pulling-in as a number appears indicates proper operation. The absence of sound is improper. If sound is absent, see Page 17 for help in Solenoid identification.

4. Pressing Self-Test button again causes the sound module to play the "Game Over" tune repeatedly.

5. Pressing the Self-Test button again causes the MPU to search each switch assembly for stuck contacts. If any are found, the number of the first set encountered is flashed on the Player Score displays. The number remains until the fault is cleared. See Page 17 for help in Stuck Switch identification. Other numbers may follow if more stuck contacts are present. If there are no stuck switches, the Match/Ball in Play display flashes '0'.

6. Pressing the Self-Test button 14 more times causes the MPU to step thru the threshold and bookkeeping functions described previously and finally to repeat the power-up test. For more rapid exit to power-up, turn the game off, then on. The game is now ready to play.

After successful completion of the Self Diagnostic Test procedure, set the game up for play. Exercise each rollover, thumper-bumper, slingshot, etc., by hand until each switch assembly on the playfield has been checked for proper operation. If actuating a switch assembly results in intermittent or no response, clean contacts by gently closing them on a clean business card or piece of paper and wiping until they wipe clean. Regap, if necessary, to 1/16". **Do not burnish or file Gold Plated Switch Contacts.**

IX. TROUBLESHOOTING ON LOCATION

The game is designed to make troubleshooting easy. Several simple procedures are given herein that cover the greatest percentage of game failures. They are written for an operator on location and require module replacement. (See Figure III) Symptoms and the action to be taken are given for each type of problem.

If the problem is more complicated and is not solved by following this procedure, more detailed procedures are available from Bally. See the Parts List for ordering information.

FIGURE IV SELF DIAGNOSTIC TEST

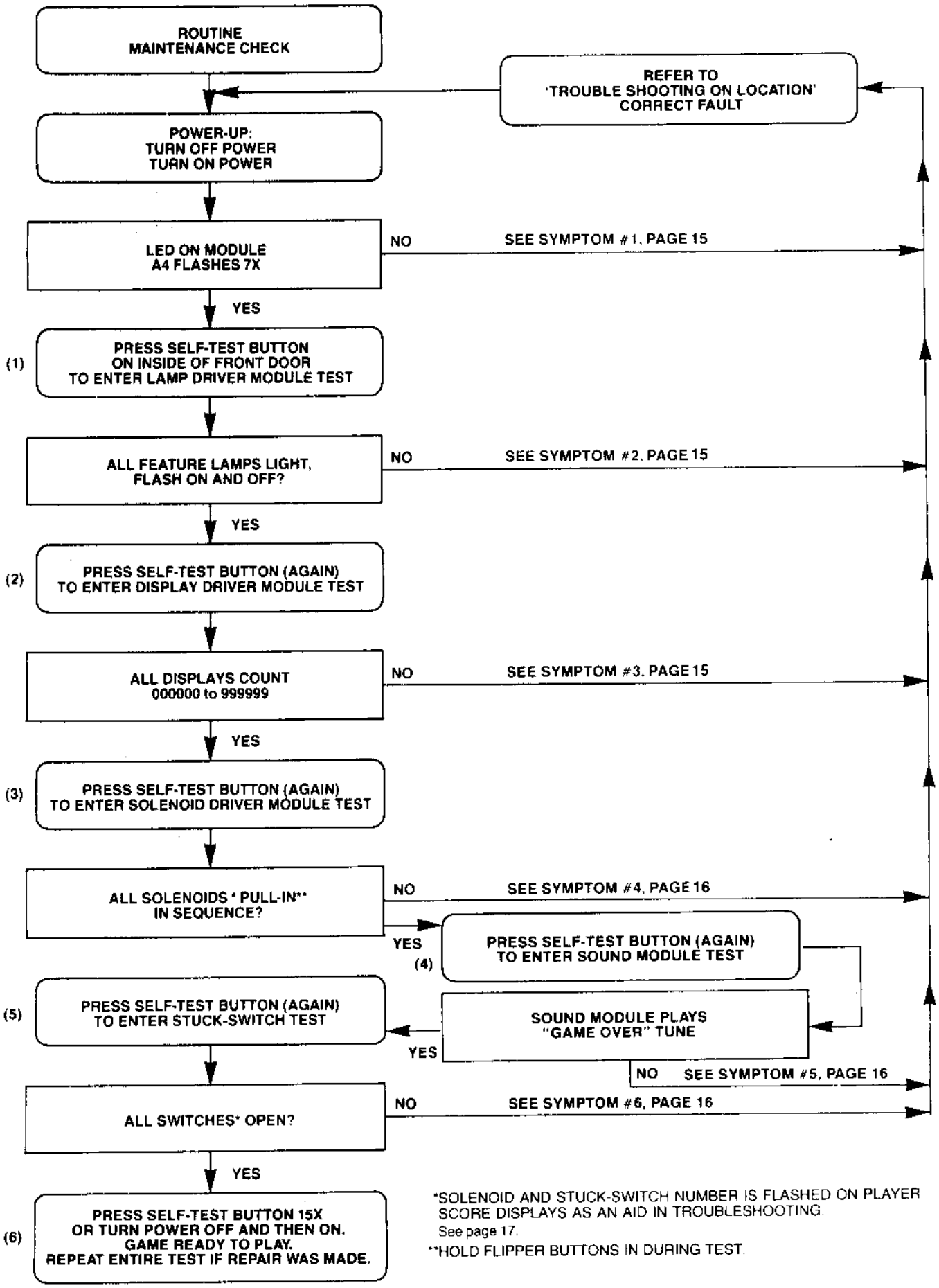

*SOLENOID AND STUCK-SWITCH NUMBER IS FLASHED ON PLAYER SCORE DISPLAYS AS AN AID IN TROUBLESHOOTING.
See page 17.

**HOLD FLIPPER BUTTONS IN DURING TEST.

1A) **SYMPTOM:** Game does not play power-up tune when power is turned on. General Illumination is present.

ACTION: **A)** Turn power OFF. Open back box. Locate light emitting diode (LED) on MPU module A4.

B) Turn Power ON. LED must flash 7X to indicate that module A4 is good. Correct flash sequence is flicker/flash-pause-and then six more flashes and LED goes out.

C. If LED does not come on, or does not flash, or flashes, but less than 7X, turn off power. Replace MPU module A4.

CAUTION: **Replacement MPU Module must have same Part Number or incorrect operation will result! See Parts List for MPU Module Part Number.**

Turn power ON.

D) If game is correct, it is now ready for play. If game is not correct, refer to Module Replacement procedure. (See Parts List.)

2A) **SYMPTOM:** Not all feature lamps light during game play.

ACTION: **A)** With power ON, open front door. Press button (Self-Test switch) once. If the game is correct, **all** feature lamps flash ON and OFF.

B) Carefully raise playfield or open back box to gain access to lamps.

C) Replace bulbs that do not flash.

D) If game is correct, it is now ready for play.

E) If game is not correct, turn power OFF. Replace Lamp Driver Module A5. Turn power ON and repeat A.

F) If game is correct, if is now ready for play.*

G) If game is not correct, turn power OFF. Replace MPU module A4. See CAUTION, 1C. Turn power ON and repeat A.

H) If game is correct, it is now ready for play.* If game is not correct, refer to Module Replacement procedure. (See Parts List.)

2B) **SYMPTOM:** One or some switched lamps always ON.

ACTION: Repeat 2AA, AB, AE, and AF and, if necessary AG & AH.

3A) **SYMPTOM:** Display digits improper on **one** or **several,** but less than all Display Driver module(s), A1. Improper: One or several segments always OFF, digits mottled or several segments or digit(s) always ON.

ACTION: **A)** With power ON, open front door. Press button (Self-Test switch) twice. If the game is correct, each digit on each Display Driver Module A1 (5 used/game) displays the count 1-9 and 0 continuously in all 6 digit positions. Note defective Display Driver modules.

B) Turn power OFF.

CAUTION: High Voltage is supplied to the Display Driver Modules, A1, from the Solenoid Driver/Voltage Regulator Module A3. Wait 30 seconds for High Voltage to Bleed Off.

C) Replace Display Driver module(s) A1. Turn power ON. Repeat A.

D) If game is correct, it is now ready to play.* If game is not correct, refer to Module Replacement procedure. (See Parts List.)

3B) **SYMPTOM:** **All** displays improper (all five display Driver modules). Improper: Digit(s) always on or off/segment(s) always on or off, all displays.

ACTION: **A)** Repeat 3AA, and AB.

B) Replace MPU module A4. See CAUTION NOTE, 1C. Turn power ON. Repeat A.

C) If game is correct, it is now ready to play.* If game is not correct, refer to Module Replacement procedure. (See Parts List.)

3C) **SYMPTON:** One or several displays always off.

ACTION: **A)** Do 3AA, AB, AC, and AD.

B) Repeat 3BB and BC, if necessary.

4A) **SYMPTOM:** Solenoid(s) do(es) not pull-in during course of game.

ACTION: **A)** With power ON, open front door. Press button (Self-Test switch) three times.

B) If game was correct, each solenoid would be energized. A number is flashed on the Player Score displays as each solenoid is pulsed. Note any numbers that do not have the sound of a solenoid associated. See Solenoid Identification Table, Page 17 and Figure V.

C) Carefully lift the playfield (or open the back box) to gain access to the solenoid. Turn power OFF. Inspect the solenoid.

D) If a lead is broken off, repair. Repeat A & B. If game is correct, it is now ready for play.* If solenoid wiring was correct, turn power OFF.

E) Replace Solenoid Driver/Voltage Regulator module A3. See CAUTION NOTE 3AB.

F) Repeat AA & AB. If game is correct, it is now ready to play.* If game is not correct, turn power OFF.

G) Replace Sound Module A8.

H) Repeat AA and AB if game is correct. It is now ready to play. If game is not correct, turn power OFF."

I) Replace MPU module A4. See CAUTION NOTE, 1C.

J) Repeat A & B. If game is correct, it is now ready to play.* If game is not correct, refer to Module Replacement Procedure. (See Parts List.)

4B) **SYMPTOM:** Solenoid(s) always energized—Note: if impulse solenoids (ball ejects, slingshots, thumper-bumpers, etc.) are energized continuously, they are subject to damage. Limit troubleshooting to one minute with power ON, followed by **five minutes with power OFF.** Repeat as necessary. Replace damaged solenoids.

ACTION: Do 4AA, AB, AE, AF, AG, AH and if necessary, AI and AJ.

5) **SYMPTOM:** No Sound.

ACTION: **A)** With Power ON, open front door, press Self-Test switch four times.

B) Turn volume control clockwise to Max.

C) If correct, sound will be heard. If incorrect, try seating speaker lead connector (J2) and input connector (J1).

D) If correct, sound will be heard. If incorrect, refer to Module Replacement procedure."

6) **SYMPTOM:** Feature (Drop Targets, etc.) does not score.

ACTION: **A)** With power ON, open front door. Press button (Self-Test switch) five times.

B) If the game is correct, Match/Ball in Play display would flash '0.' If a number appears on the Player Score displays, see Switch Assembly Identification Table, Page 17 and Figure V.

C) Carefully lift the playfield. Locate the switch assembly identified from the number. Visually inspect the switch assembly. If the contacts are 'stuck,' regap them to 1/16". See section under ADJUSTMENTS. Repeat A & B. If the game is correct, it is now ready to play.* If game is not correct, turn the power OFF.

D) Replace MPU module A4. See CAUTION NOTE 1, C.

E) Repeat A & B. If the game is correct, it is now ready to play.* If the game is not correct, refer to Module Replacement Procedure. (See Parts List).

7) **SYMPTOM:** Game blows fuse(s) repeatedly.

ACTION: See Module Replacement Procedure. F.O. 560

*Turn power On-Off switch OFF and then ON.

GAME #1157 SILVERBALL MANIA (figure V)

SOLENOID IDENTIFICATION TABLE

Self Test#	SOLENOID IDENTIFICATION	Self Test #	SOLENOID IDENTIFICATION
01	OUTHOLE KICKER	07	LEFT THUMPER BUMPER
02	KNOCKER	08	RIGHT THUMPER BUMPER
03	KICK AND DOWN	09	CENTER THUMPER BUMPER
04	RIGHT SLINGSHOT	10	COIN LOCKOUT DOOR
05	LEFT SLINGSHOT	11	K1 RELAY (flipper enable)
06	UP KICKER		

SWITCH ASSEMBLY SELF-TEST DISPLAY NUMBERS

Self Test #	SWITCH DESCRIPTION	Self Test #	SWITCH DESCRIPTION
01	BOTTOM CENTER LANE	21	TOP "V" TARGET
02	HOPP R.O. BUTTON (2)	22	TOP "L" TARGET
03	TOP RIGHT ROLLOVER	23	TOP "I" TARGET
04	TOP CENTER ROLLOVER	24	TOP "S" TARGET
05	TOP LEFT ROLLOVER	25	RIGHT SPINNER
06	CREDIT BUTTON	26	"A" RIGHT OUT ROLLOVER
07	TILT (3)	27	RIGHT "I" RETURN R.O.
08	OUTHOLE KICKER	28	CENTER TARGET
09	COIN III (RIGHT)	29	"A" LEFT RETURN R.O.
10	COIN I (LEFT)	30	"M" LEFT OUT R.O.
11	COIN II (MIDDLE)	31	LOWER "L" SIDE TARGET
12		32	UPPER "L" SIDE TARGET
13		33	LEFT SPINNER
14		34	50 PT. REBOUND (4) AND TOP BUMPERS (4)
15		35	SERVICE SW. (PANEL)
16	SLAM (2)	36	RIGHT SLINGSHOT
17	RIGHT "A" TARGET	37	LEFT SLINGSHOT
18	LEFT "B" TARGET	38	CENTER THUMPER BUMPER
19	LEFT "R" TARGET	39	RIGHT THUMPER BUMPER
20	LEFT "E" TARGET	40	LEFT THUMPER BUMPER

NOTE: SLINGSHOT & THUMPER BUMPER COILS WILL BE ENERGIZED WHEN SWITCH IS MADE.

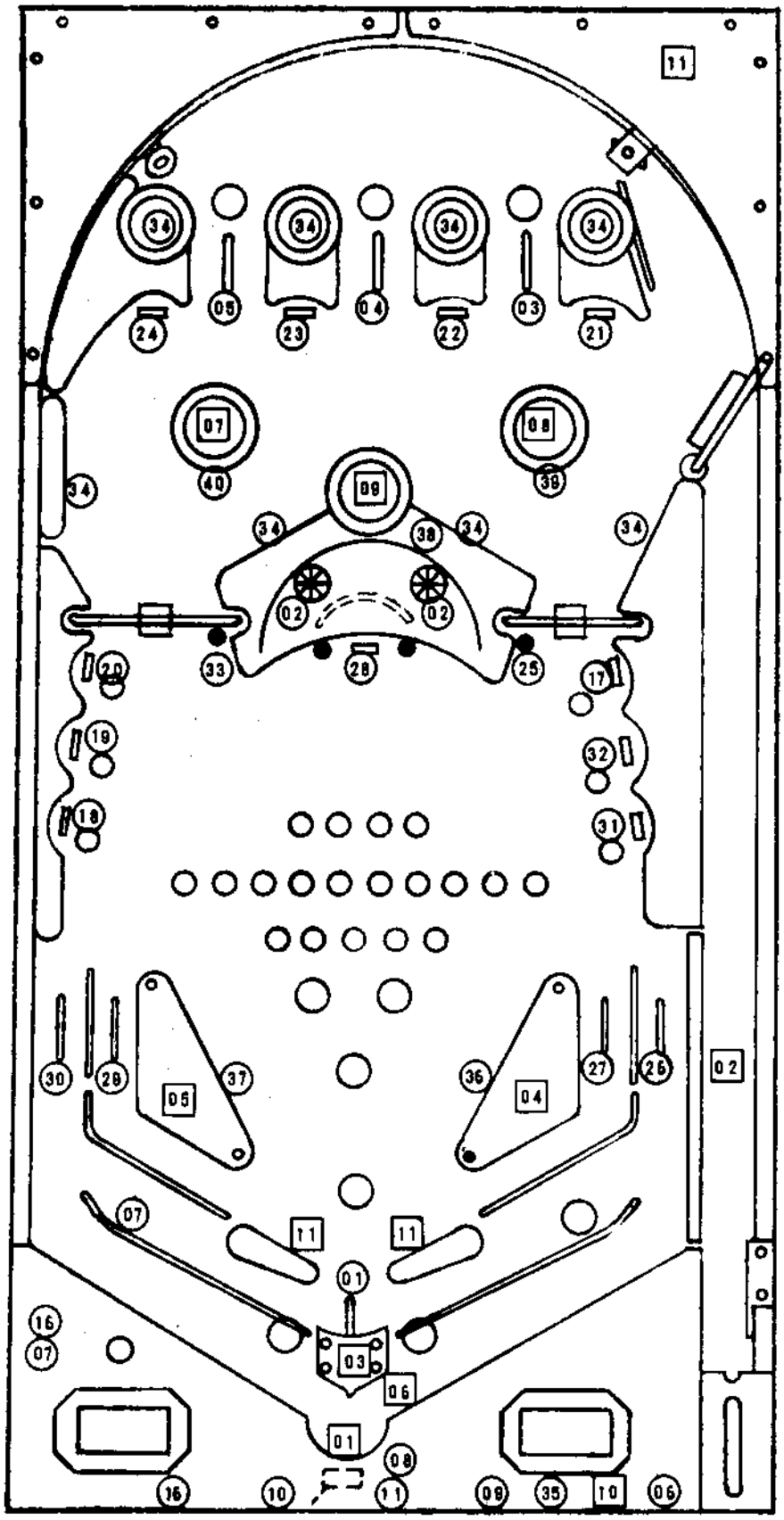

#1157 SILVERBALL MANIA

INDICATES SWITCH ASSEMBLY IDENTIFICATION NUMBERS.
NOTE: CABINET: 07, 16
DOOR: 06, 09
10, 11, 16

INDICATES SOLENOID IDENTIFICATION NUMBERS.
NOTE: DOOR: 10
BACKBOX: 11
CABINET: 02

FIGURE V

ASSEMBLY ADJUSTMENTS:

GENERAL:

All switch assemblies consist of leaf springs, contacts, separators, plastic tubing and screws to hold them to the mounting surface. Before attempting to adjust a switch assembly, make sure that these screws are tight. If not, tighten screw closest to the contact end of the leaf spring first. This will prevent the assembly from being secured in such a manner that the leaf springs tend to fan out. In general, all leaf springs are adjusted for a 1/16" gap in the open position and .010" overtravel or wipe in the closed position. All contacts should be in good condition. Unless otherwise instructed, they should be dry or non-lubricated. All contacts should be free of dust and dirt. Contacts, with the exception of the flipper button switch assemblies, are plated to resist corrosion. Filing or burnishing breaks the finish and encourages corrosion. Clean by closing the contacts over a clean piece of paper (e.g. a business card) and wiping gently until the contacts are clean. For the flipper button switch assemblies **ONLY:** Tarnish can be removed with a contact file followed by a burnishing tool. Severely pitted contacts must be replaced as an assembly. In general, contacts need be cleaned or replaced and adjusted only when they are found to be a source of game malfunction.

X. SERVICE PARTS:

A parts catalogue is available upon request. The catalogue is illustrated and lists all replacement parts for each game manufactured by Bally. Requests should be addressed to:

BALLY MANUFACTURING CORPORATION
2640 WEST BELMONT AVENUE
CHICAGO, ILLINOIS 60618
ATTN: PARTS DEPARTMENT

SERVICE HINTS:

The Bally playfield has an Improved tuff-coat finish with excellent wearing properties. Its life expectance, as well as play appeal, can be extended by periodic cleaning of the playfield.

DO: Bally recommends you clean your playfield with Wildcat #125 (Wildcat Chemical Co., 1333 W. Seminary Drive, Ft. Worth, Texas 76115). Wildcat #125 is a combination cleaner and polish. Bally has tried and tested this product and found it to be very effective. If Wildcat #125 is not available, Bally suggests you ask your Distributor to order it. Inspect and hand polish the ball in a clean cloth. A chipped ball must be replaced. It can ruin the finish on the playfield in a short period of time.

DON'T: Use water in large quantities, highly caustic cleaners, abrasive cleaners or cleaning pads on the playfield. Do not allow a wax or polish build up. Waxes yellow with age and spoil play appeal.

XI. PARTS LIST
#1157 SILVERBALL MANIA

MISCELLANEOUS	PART NUMBER
Transformer (Domestic or Export)	E-122-125
Bulbs, #44	E-125-22
Fuse, 1 Amp. 3 AG Slow Blow (Playfield Solenoid Protection)	E-133-44

ASSEMBLY COILS	
Coin Lockout	FO-36-7000
Flipper (2)	AQ-25-500/ 34-4500
Knocker	AR-26-1200
Outhole Kicker	AN-26-1200
Thumper-Bumper (3)	AN-26-1200
Sling-Shot (2)	AN-26-1200
Up Kicker	NO-26-1900
Down Kicker	AN-26-1200

PLAYFIELD PARTS — See Figure II

MODULES	
Lamp Driver A5	AS-2518-23
Display Driver A1 (5 used)	AS-2518-21
Solenoid Driver/Voltage Regulator A3	AS-2518-22
MPU A4	AS-2962-13
Transformer & Rectifier A2	AS-2877-1
Rectifier Board (Part of A2)	AS-2518-18
Sound	AS-3022-3

REPAIRS PROCEDURES/AIDS	
Module & Component Replacement	F.O.560-1
AID (Assistance in Diagnostics) Kit, used with F.O.560-1	KIT #485-1

MODULE COMPONENTS
SEE MODULE PARTS LIST

MODULE COMPONENT STARTER KITS
(Each Kit contains an assortment of the most needed electronic parts for use in Module repair.)
Kit #490—For Rectifier Board (Part of A2)
Kit #503—For MPU Board A4 (Less Memory U1-U6)
Kit #492—For Solenoid Driver/Voltage Regulator A3
Kit #493—For Display Driver A1
Kit #494—For Lamp Driver A5
Kit #559—For Sound A8

AS-2518-35 MPU MODULE

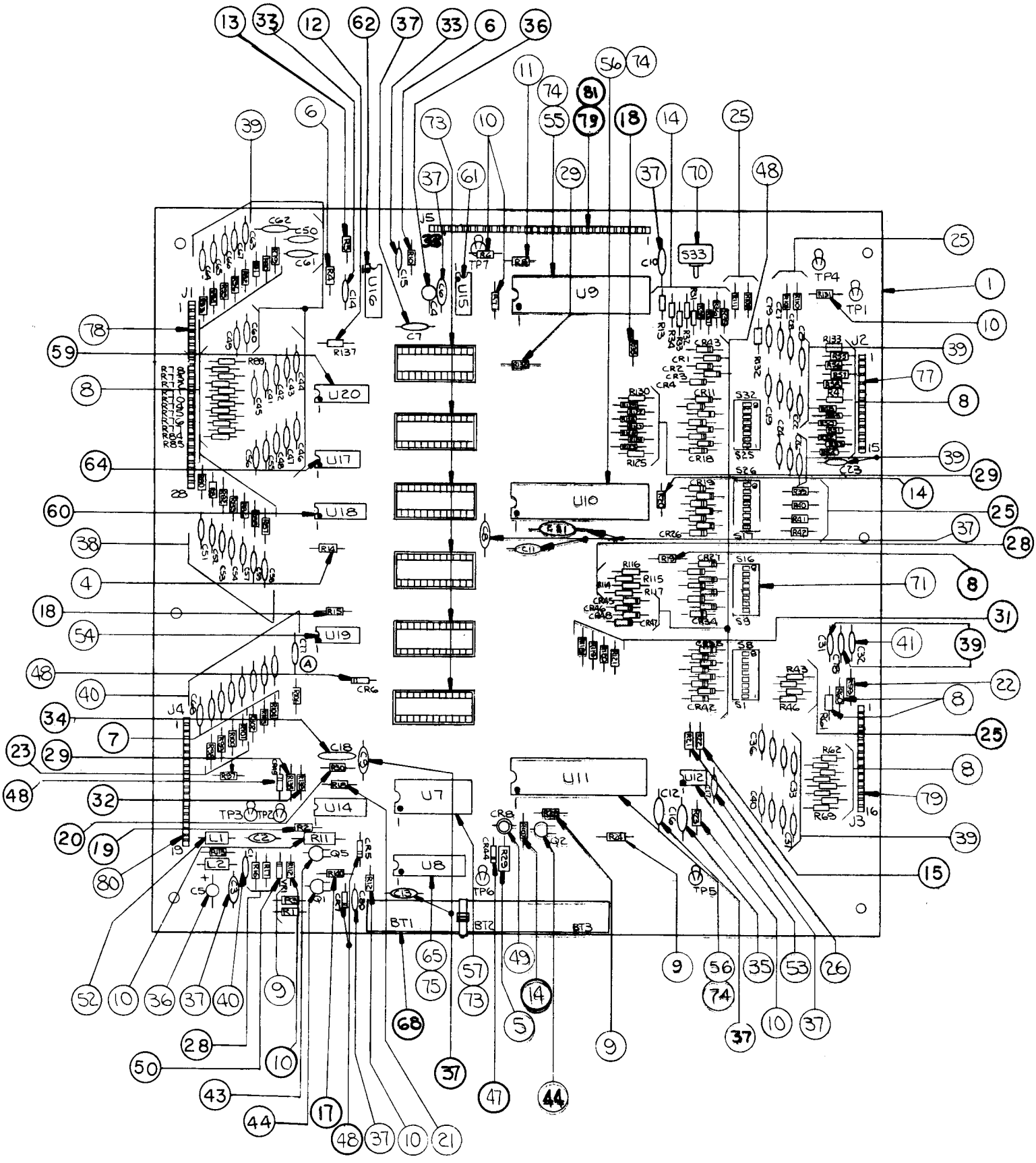

A4: MPU MODULE
COMPONENT PARTS LIST

ITEM	REFERENCE DESIGNATION	BALLY PART #	DESCRIPTION
1	A4 (see note 1)	AS-2962-13	MPU Module Complete. Silverball Mania
2	A4 (see note 2)	AS-2518-35	MPU Module less Program Memory, U1-6 incl.
3-32	See Schematic		Resistors, See schematic for value
33	C14, C15	E-00586-0067	Capacitor, 470 PFD, 1kv
34	C18	E-00586-0088	Capacitor, .05 MFD, 16V
35	C16	E-00586-0081	Capacitor, .1 MFD, 100V
36	C4, C5	E-00586-0073	Capacitor, 4.5 MFD, 25V
37	C3, C6-C13, C17, C81	E-00586-0085	Capacitor, .01 MFD, 25V
38	C79, C41-C67	E-00586-0083	Capacitor, 470 PFD, 50V
39	C19-C31, C78, C33-C40	E-00586-0082	Capacitor, 390 PFD, 50V
40	C1, C2, C68-C77	E-00586-0084	Capacitor, 820 PFD, 50V
41	C32	E-00586-0077	Capacitor, 3000 PF, 1kv
43	Q5	E-00585-0023	Transistor PNP (MPS-3702)
44	Q1, Q2	E-00585-0031	Transistor (2N3904)
47	CR44	E-00587-0006	Diode (IN4004)
48	CR1-CR7, CR11-CR43, CR45-CR49	E-00587-0014	Diode (IN4148)
49	CR8	E-00679	LED (Green)
50	VR1	E-00598-0008	Diode Zener (8.2V, IN9598)
52	L1, L2	E-00604-0003	Inductor, 22 Micro Hy.
53	U12	E-00620-0004	Timer (555)
54	U19	E-00620-0005	Quad 2 Input (4011)
55	U9	E-00620-0028	MPU I.C. (6800)
56	U10, U11	E-00620-0029	PIA I.C. (6820)
57	U7	E-00620-0030	RAM I.C. (6810)
59	U20	E-00620-0032	HEX Buffer I.C. (14502B)
60	U14, U18	E-00620-0033	HEX Inverter (4049B)
61	U15	E-00620-0034	Quad Memory Drive (MC3459L)
62	U16	E-00620-0035	Dual Monostable (9602)
64	U17	E-00620-0041	Quad 2 Inputs (74L00N)
65	U8	E-00620-0042	RAM (C MOS, P5101L-3)
68	BT1, BT2, BT3	E-00628-0003	Battery
70	S33	E-00658-0001	Push Button Switch
71	S1-S8, S9-S16, S17-S24, S25-S32	E-00677	DIP Switch
73		E-00712	24 Pin Socket
74		E-00712-0001	40 Pin Socket
75		E-00712-0003	22 Pin Socket
77	J2	E-00715	15 Pin Wafer Connector
78	J1	E-00715-0004	28 Pin Wafer Connector
79	J3, J5	E-00715-0017	16 Pin Wafer Connector
80	J4	E-00715-0018	19 Pin Wafer Connector
81	J5	E-00715-0024	17 Pin Wafer Connector

NOTE 1:

When ordering, fill in dash number. For example, AS-2962-0: LOST WORLD, AS-2962-2: SIX MILLION DOLLAR MAN, AS-2962-3: PLAYBOY, AS-2962-4: VOLTAN, AS-2962-5: SUPERSONIC, AS-2962-6: STAR TREK, AS-2962-7: KISS, AS-2962-8: PARAGON, AS-2962-9: GROUND SHAKER, AS-2962-10 HARLEM GLOBE-TROTTERS, AS-2962-12: DOLLY PARTON, AS-2962-13: SILVERBALL MANIA

NOTE 2:

Order replacement memory chips U1-U6, specifying game, socket and part number stamped on chip.

AS-2518-23 LAMP DRIVER MODULE

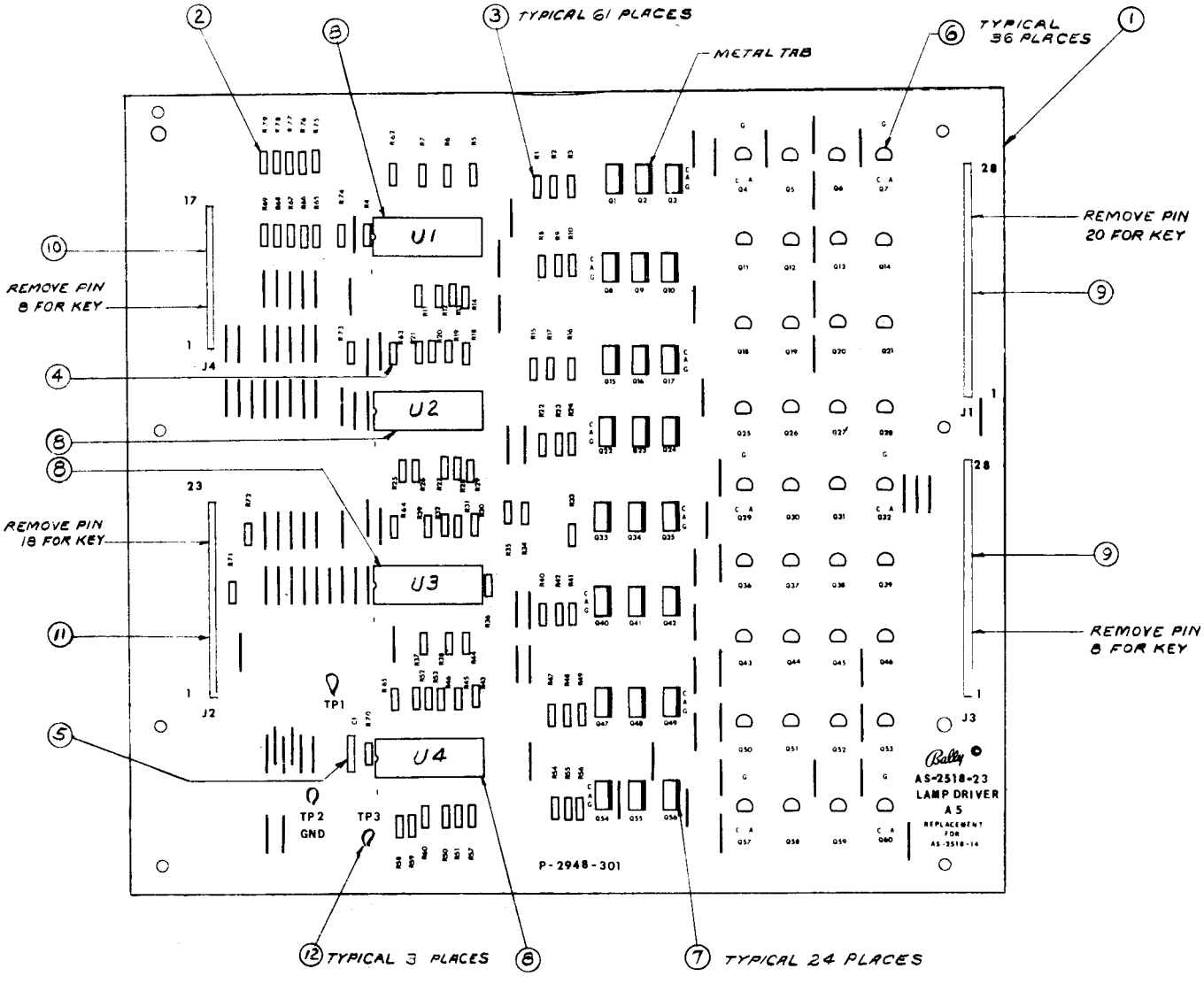

A5: LAMP DRIVER MODULE
COMPONENT PARTS LIST

ITEM	REFERENCE DESIGNATION	BALLY PART #	DESCRIPTION
1	A5	AS-2518-23	Lamp Driver Module, Complete
2	R71-R79	E-00105-242	Resistor, 20kΩ, 5%, ¼W
3	R1-R60, R70	E-00105-0237	Resistor, 2kΩ, 5%, ¼W
4	R61-R69	E-00105-0256	Resistor, 2.2MΩ, ¼W
5	C1	E-00586-0065	Capacitor, .01 MFD, 500V
6	Q4-Q7, Q11-Q14, Q18-Q21, Q25-Q32, Q36-Q39, Q43-Q46, Q50-Q53, Q57-Q60	E-00585-0014	SCR, 2N5060
7	Q1-Q3, Q8-Q10, Q15-Q17, Q22-Q24, Q33-Q35, Q40-Q42, Q47-Q49, Q54-Q56	E-00585-0029	SCR, MCR106-1
8	U1-U4	E-00620-0037	I.C., Decoder, 14514B
9	J1, J3	E-00715-0004	28 Pin Wafer Connector
10	J4	E-00715-0024	17 Pin Wafer Connector
11	J2	E-00715-0014	23 Pin Wafer Connector
12	TP1, TP2, TP3	P-05399	Test Clip

AS-2518-21 DISPLAY DRIVER MODULE

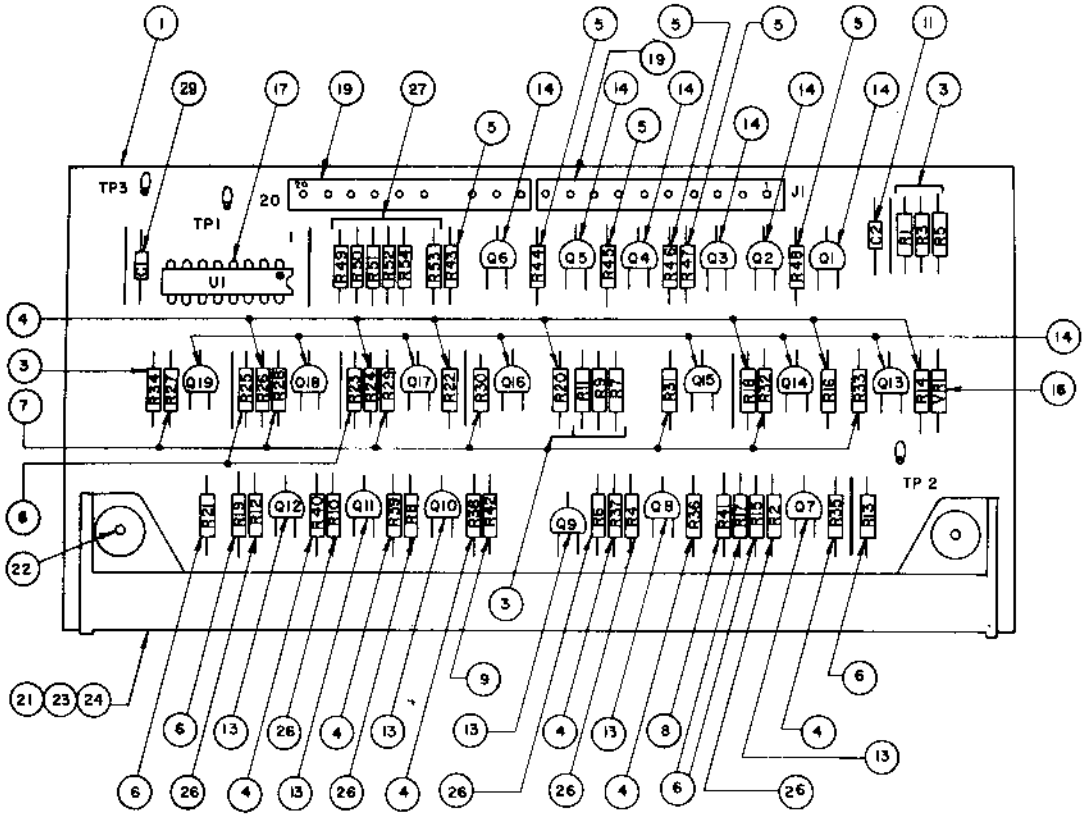

A1: DISPLAY DRIVER MODULE
COMPONENT PARTS LIST

ITEM	QTY.	REFERENCE DESIGNATION	BALLY PART #	DESCRIPTION
1	1		P-2948-296	P.C. Board, M-645-392
3	7	R1, R3, R5, R7, R9, R11, R34	E-105-226	Resistor, 100K Ω
4	13	R14, R16, R18, R20, R22, R24, R26, R35, R36, R37, R38, R39, R40	E-105-227	Resistor, 300K Ω
5	6	R43, R44, R45, R46, R47, R48	E-105-228	Resistor, 9.1K Ω
6	7	R13, R15, R17, R19, R21, R23, R25	E-105-229	Resistor, 1.5K Ω
7	7	R27, R28, R29, R30, R31, R32, R33	E-105-230	Resistor, 1K Ω
8	1	R41	E-105-231	Resistor, 39K Ω
9	1	R42	E-105-271	Resistor, 240K Ω
10				
11	1	C2	E-586-65	Capacitor, .01 MFD, 500V
13	6	Q7, Q8, Q9, Q10, Q11, Q12	E-585-32	Transistor (2N5401)
14	13	Q1, Q2, Q3, Q4, Q5, Q6, Q13, Q14, Q15, Q16, Q17, Q18, Q19	E-585-33	Transistor (MPS-A42)
16	1	VR1	E-598-7	Zener Diode, 110V
17	1	U1	E-620-38	I.C. Decoder
18				
19	2	J1	E-715-34	10 Pin Wafer Pin Connector
21	1	DS1	E-680	Digital Display Panel
22	2		M-1836	Hi-Lo Screw, W/H
23	1		P-2399	Display Mounting (Top)
24	1		P-2399-1	Display Mounting (Bottom)
26	6	R2, R4, R6, R8, R10, R12	E-105-287	Resistor, 2.2K Ω
27	6	R49, R50, R51, R52, R53, R54	E-105-242	Resistor, 20K Ω
28	As Req'd			Wire Jumper
29	1	C1	E-586-85	Capacitor, .01 MFD, 25V

NOTE: INTERCHANGEABLE WITH AS-2518-15

AS-2518-22 SOLENOID DRIVER/VOLTAGE REGULATOR MODULE

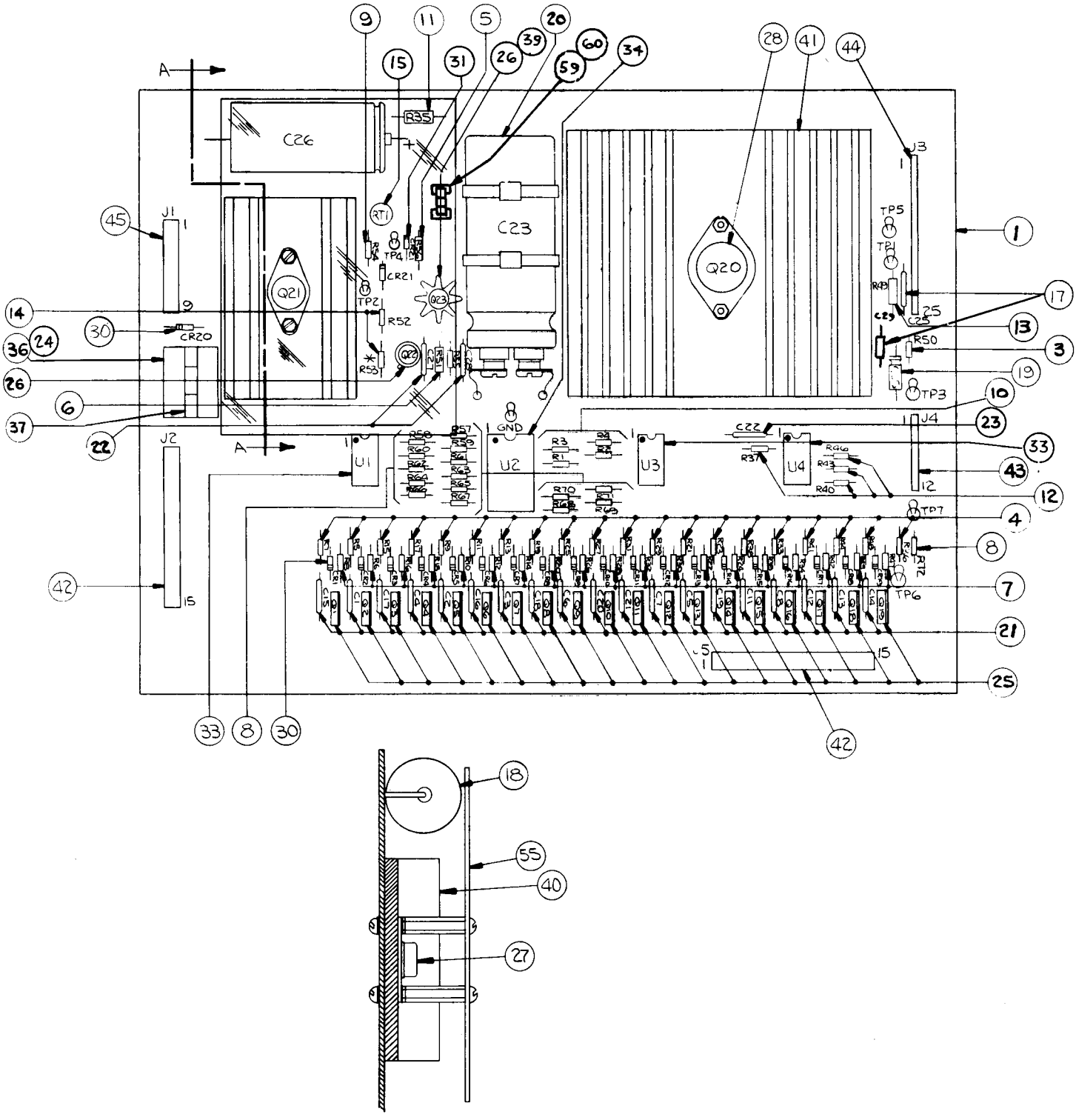

NOTE: INTERCHANGEABLE WITH AS-2518-16

A3: SOLENOID DRIVER/VOLTAGE REGULATOR MODULE

COMPONENT PARTS LIST

ITEM	REFERENCE DESIGNATION	BALLY PART #	DESCRIPTION
1	A3	AS-2518-22	Solenoid Driver/Voltage Regulator Module, Complete
3-14	Resistors		Resistor, See Schematic for value.
15	RT1	E-00599-0014	Pot. (Linear) 25K
17	C25, 29	E-00586-0014	Capacitor, .1 MFD, 20V
18	C26	E-00586-0059	Capacitor, 160 MFD, 350V
19	C24	E-00586-0063	Capacitor, 2 MFD @ 25V
20	C23	E-00586-0062	Capacitor, 11700 MFD, 20V
21	C1-C8, C11-C21	E-00586-0064	Capacitor, .002 MFD, 1kv
22	C27, C28	E-00586-0065	Capacitor, .01 MFD, 500V
24	K1	E-00146-0795	Relay, Printed Circuit
25	Q1-Q19	E-00585-0034	Transistor, SE9302
26	Q22, Q23	E-00585-0041	Transistor, 2N3440
27	Q21	E-00585-0042	Transistor, 2N3584
28	Q20	E-00710	+5V Regulator, LAS1405 or 78H05KC or LM323K
30	CR1-CR21	E-00587-0015	Diode (IN4004)
31	VR1	E-00598-0010	Diode, Zener 140V, IN5275A
33	U1, U3, U4	E-00681	I.C. Transistor Array, CA3081
34	U2	E-00620-0039	I.C. Binary to 1/16 Decoder, 74L154
36		E-00592-0002*	Relay Socket
37		M-1839*	Relay Holder
39		E-00682	Heat Sink, TO5
40		E-00682-0001	Heat Sink, TO66
41		E-00682-0002	Heat Sink, TO3 Case
42		E-00715-0039	15 Pin Wafer Connector
43		E-00715-0016	12 Pin Wafer Connector
44		E-00715-0020	25 Pin Wafer Connector
45		E-00715-0033	9 Pin Wafer Connctor
55		M-1838	Shield-Plexiglass
59		E-00148-0021	Fuse Clips
60	F1	E-00133-0029	Fuse 8 AG-3/16 Amp.
23	C22	E-00586-0085	Capacitor, .01 MFD, 25V

*USED WITH ITEM 24, E-00146-0791, PLUG IN RELAY ONLY

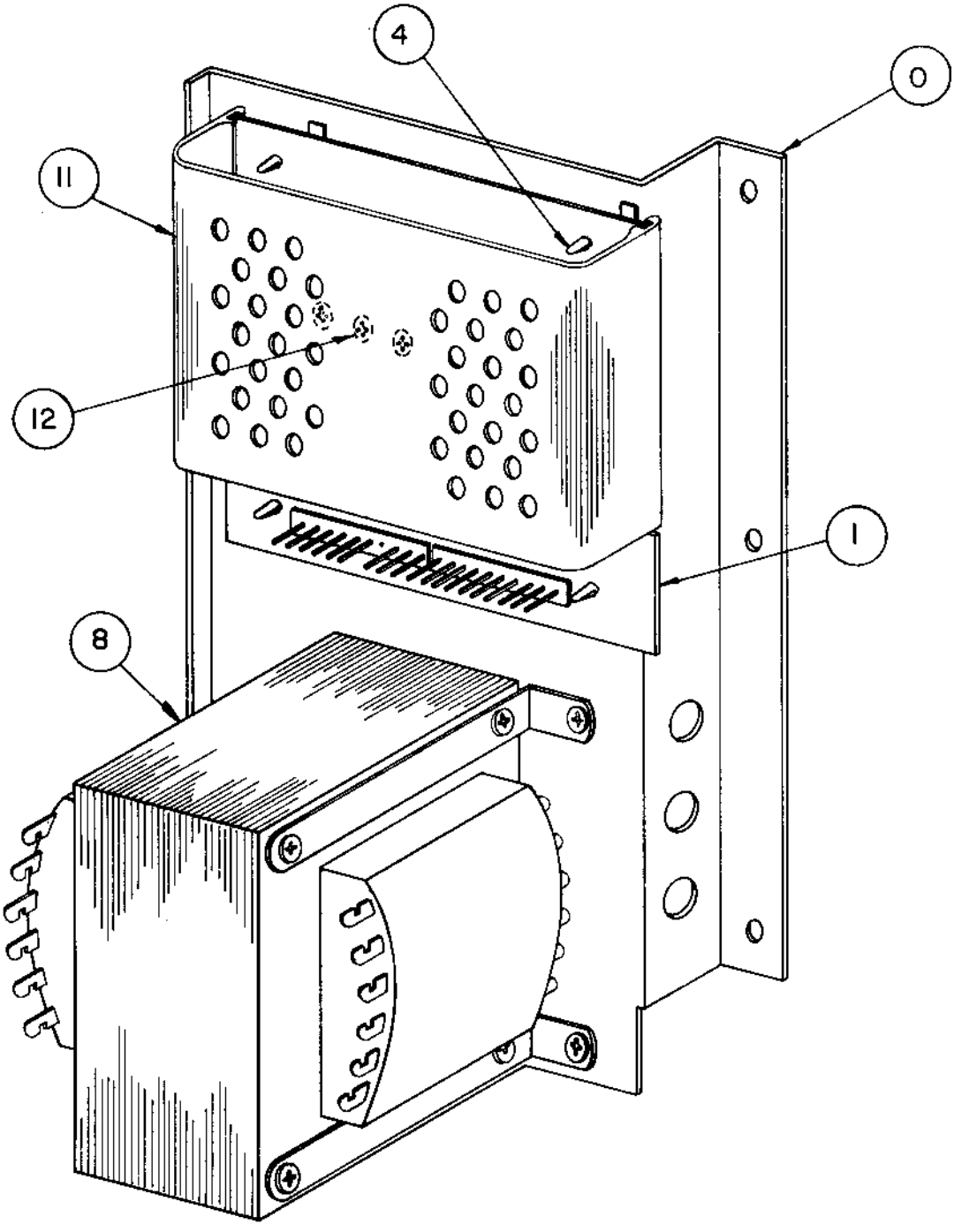

A2: POWER TRANSFORMER MODULE
COMPONENT PARTS LIST

ITEM	REFERENCE DESIGNATION	BALLY PART #	DESCRIPTION
0	A2	AS-2877-1	Power Transformer Module, Complete
1		AS-2518-18	Rectifier Board Assembly
4		M-1829-2a	Circuit Board Support (4 Req'd.)
8		E-00122-0125c	Transformer 120/240V, 50/60 Hz
11		P-2692b	P.C.B Cover
12		M-1834	Heat Sink Compound

AS-2518-18 RECTIFIER BOARD ASSEMBLY

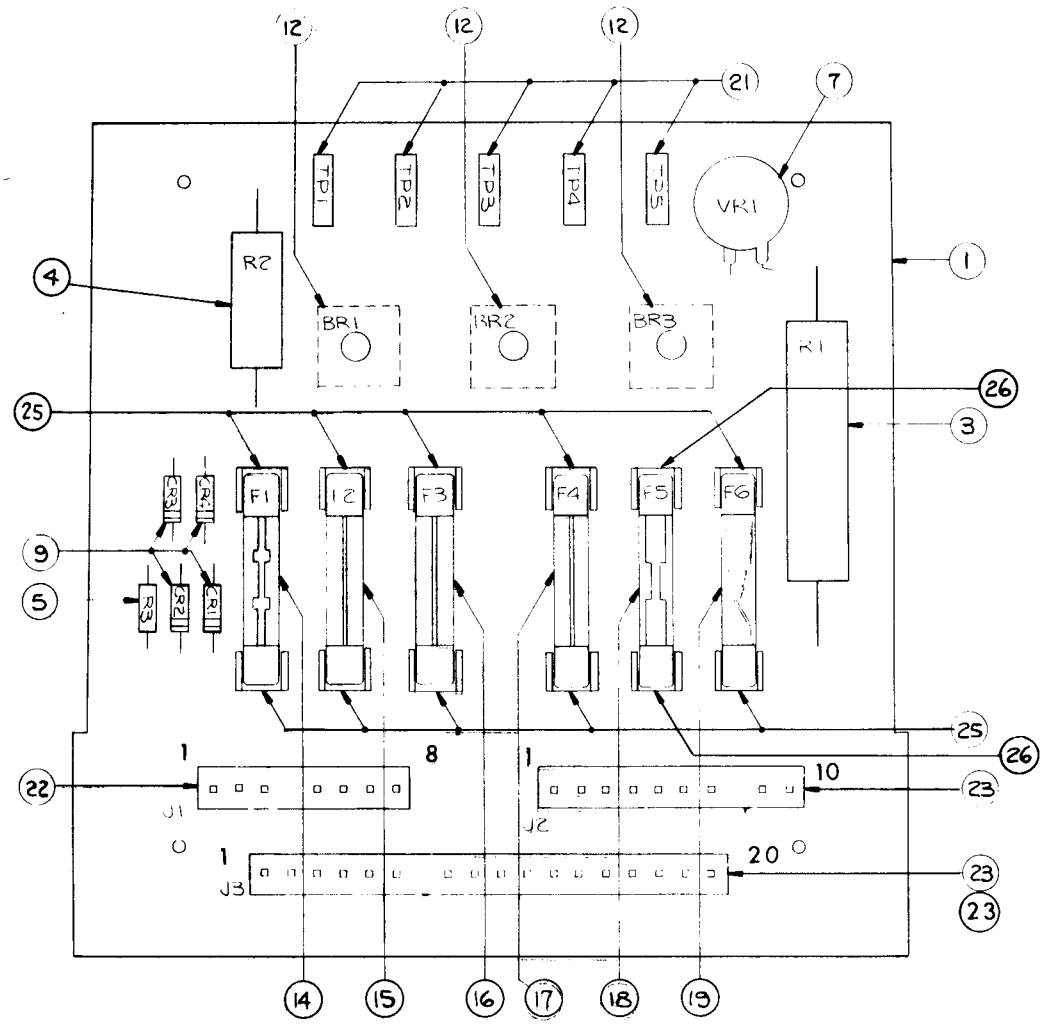

RECTIFIER BOARD ASSEMBLY
(Part of)
A2: POWER TRANSFORMER MODULE
COMPONENT PARTS LIST

ITEM	REFERENCE DESIGNATION	BALLY PART #	DESCRIPTION
1	P/O A2	AS-2518-18	Rectifier Board Assembly, Complete
3	R1	E-00104-0092	Resistor, 10%, 600 Ohm, 10W
4	R2	E-00104-0091	Resistor, 25 Ohm, 5W
5	R3	E-00105-0226	Resistor, 5%, 100K Ohm, ¼W
7	VR1	E-00623	Varistor
9	CR1, CR2, CR3, CR4	E-00587-0006	Diode (IN4004)
12	BR1, BR2, BR3	E-00602-0003	Bridge Rectifier (VJ248 VARO)
14	F1	E-00133-0010	Fuse, 10A, 32V, 3AG
15	F2	E-00133-0028	Fuse, 3/4A, 250V, 3AG,
16	F3	E-00133-0004	Fuse, 4A, 32V, 3AG
17	F4	E-00133-0005	Fuse, 5A, 32V, 3AG
18	F5	E-00133-0027	Fuse, 20A, 32V, 3AG
19	F6	E-00133-0024	Fuse, 3A, 3AG, S.B.
21		E-00684	Test Point
22	J1,	E-00715-0032	8 Pin Wafer Connector
23	J2, J3	E-00715-0034	10 Pin Wafer Connector
25		E-00148-0021	Fuse Clips
26		E-00148-0022	Fuse Clips

A8: SOUND MODULE
COMPONENT PARTS LIST

ITEM	REFERENCE DESIGNATION	BALLY PART NO.	DESCRIPTION
1	A8 (see note 1)	AS-3022-3	PWB Module Complete
2	U1	E-620-124	Sound Chip AY-3-8910
3	U2	E-620-29	PIA, 6820/21
4	U3	E-620-125 (E620-128)	CPU, 6808 (6802 Note 3)
5	U10	E-620-30	Ram, 6810 (Note 3)
6	U5	E-620-33	Hex Inverter 4049B
7	U6	E-620-5	Quad 2 Input 4011B
8	U8	E-620-126	Amp, LM3900
9	U9	E-620-127	Power Amp, TDA 2002
10	Q1	E-585-31	Transistor, 2N3904
11	CR1, 2	E-587-6	Diode, 1N4004
12	SW1	E-658-1	Switch
13	C12	E-586-118	Cap. .2MF ±20% Y5P, 16 V.
14	C2	E-586-130	Cap. .47 ±20%
15	C16	E-586-83	Cap. 470 PF 50 V.
16	C3	E-586-120	Cap. 68 PF, ±20% 1K
17	C18, 19	E-586-121	Cap. 27 PF, ±20% 1K
18	Y1	E-744-5	Crystal, 3.579545 MHZ
19	J2	E-736-2	Connector, Wafer, 2 Pin KK156
20	J1	E-736-15	Connector, Wafer, 15 Pin KK156
21	R9	E-105-196	Resistor, 1 Ohm, ¼ W., 5%
22	R8	E-105-211	Resistor, 2.2 Ohm, ¼ W., 5%
23	R7	E-105-303	Resistor, 220 Ohm, ¼ W., 5%
24	R1	E-105-230	Resistor, 1 K, ¼ W., 5%
25	R21, 22, 23, 24	E-105-238	Resistor, 3.3K. Ohm, ¼ W., 5%
26	R6	E-105-239	Resistor, 4.7K., ¼ W., 5%
27	R3, 14, 15, 16, 17, 18, 19, 25	E-105-185	Resistor, 10K., ¼ W., 5%
28	R2	E-105-245	Resistor, 30K., ¼ W., 5%
29	R10	E-105-252	Resistor, 180K., ¼ W., 5%
30	R4	E-105-225	Resistor, 200K., ¼ W., 5%
31	R5, 20	E-105-285	Resistor, 1M, ¼ W., 5%
32	RT1	E-599-16	Potentiometer 1K
33	C23	E-586-122	Cap. .001 ±20% 2SF
34	C15	E-586-123	Cap. 4700 MF @ 25 V.
35	C7	E-586-124	Cap. 470 MF @ 6.3 V
36	C8	E-586-129	Cap. 470 MF @ 16 V.
37	C5, 13	E-586-90	Cap. 1 MF @ 50 V.
38	C9, 1, 14, 6	E-586-89	Cap. .1 MF
39	C4, 22, 17, 21, 20, 24	E-586-85	Cap. .01 MF
40	XU10, XU4	E-712	Socket, 24 Pin
41	XU1, XU2, XU3	E-712-1	Socket, 40 Pin
42	Used with 43	LSPR-00632-1106	Bolt, 6 x 32 x ⅜
43	Used with 42	N-00632-2112	Nut, 6 x 32
44	H.S for U9	E-682-8	Heat Sink, 6030BTT
45	Used with C15	E-647-5	Ty Rap
46	TP1, 2, 3, 4, 5, 6	P-5399	Test Point
47	Use with 44, 9	M-1834	Thermal Grease
48	Jumper, B		22 AWG Wire, Solid Tinned
		W-1211c	Schematic

NOTE 1: When ordering specify name of game.

NOTE 2: Order replacement memory chip U4 specifying name of game and part no. stamped on chip.

NOTE 3: When using item 4, 6808 you must use item 5, 6810 and the "B" jumper. When item, 6802 is available delete item 5 and use "A" jumper.

AS-2518-51 SOUND MODULE

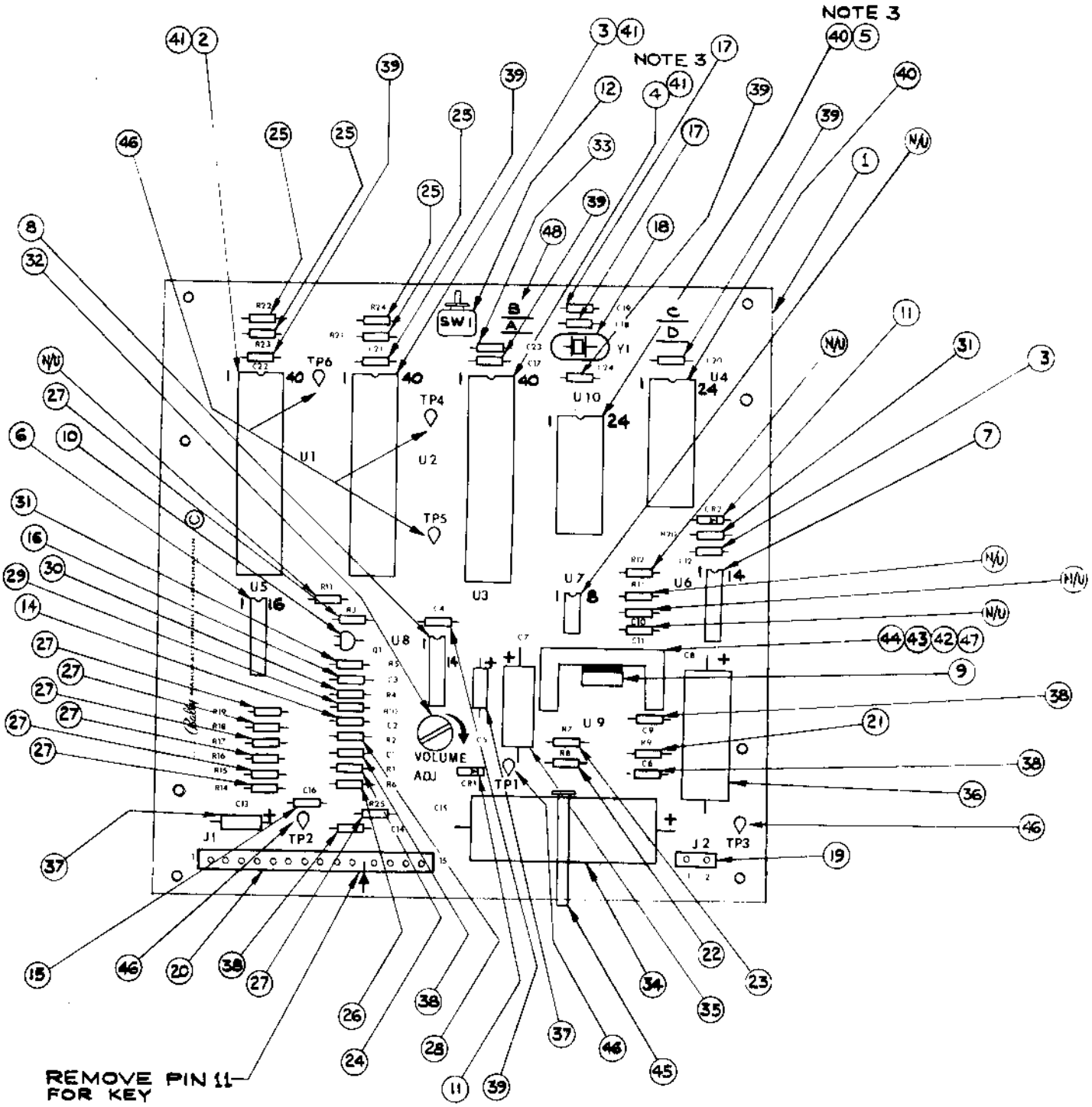

ATTACHMENT II: INSTRUCTION MANUAL

Female insulation displacement connectors are used in the backbox cable harnesses. These connectors can be identified by the side entry of the leads and by their black, plastic covers.

The mating, white, male connectors on the Sound, Solenoid Driver and Transformer modules have .156″ center to center spacing. Two pin lengths are in use. This, and all current games have a .450″ length. Older games have a .640″ length.

During servicing, when mating insulation displacement connectors on male connectors with a .640″ pin length:

1. Hold the female connector parallel to the module surface.
2. Carefully align the openings in the female with the male pins.
3. Mate the connector set firmly but gently while maintaining the parallel relationship.
4. As resistance is encountered, stop applying force. An air gap of about .150″ between the male and female connector bodies is normal at complete engagement.

CAUTION: It is not necessary or advisable to force the female connector further onto the male pins. Doing so may cause an intermittent connection.

When mating insulation displacement connectors on male connectors with a .450″ pin length:

1. Follow steps 1-4 above, but—
2. Disregard the **CAUTION** note. Also, no air gap exists between the connector pair on total engagement.

W-1181-3c

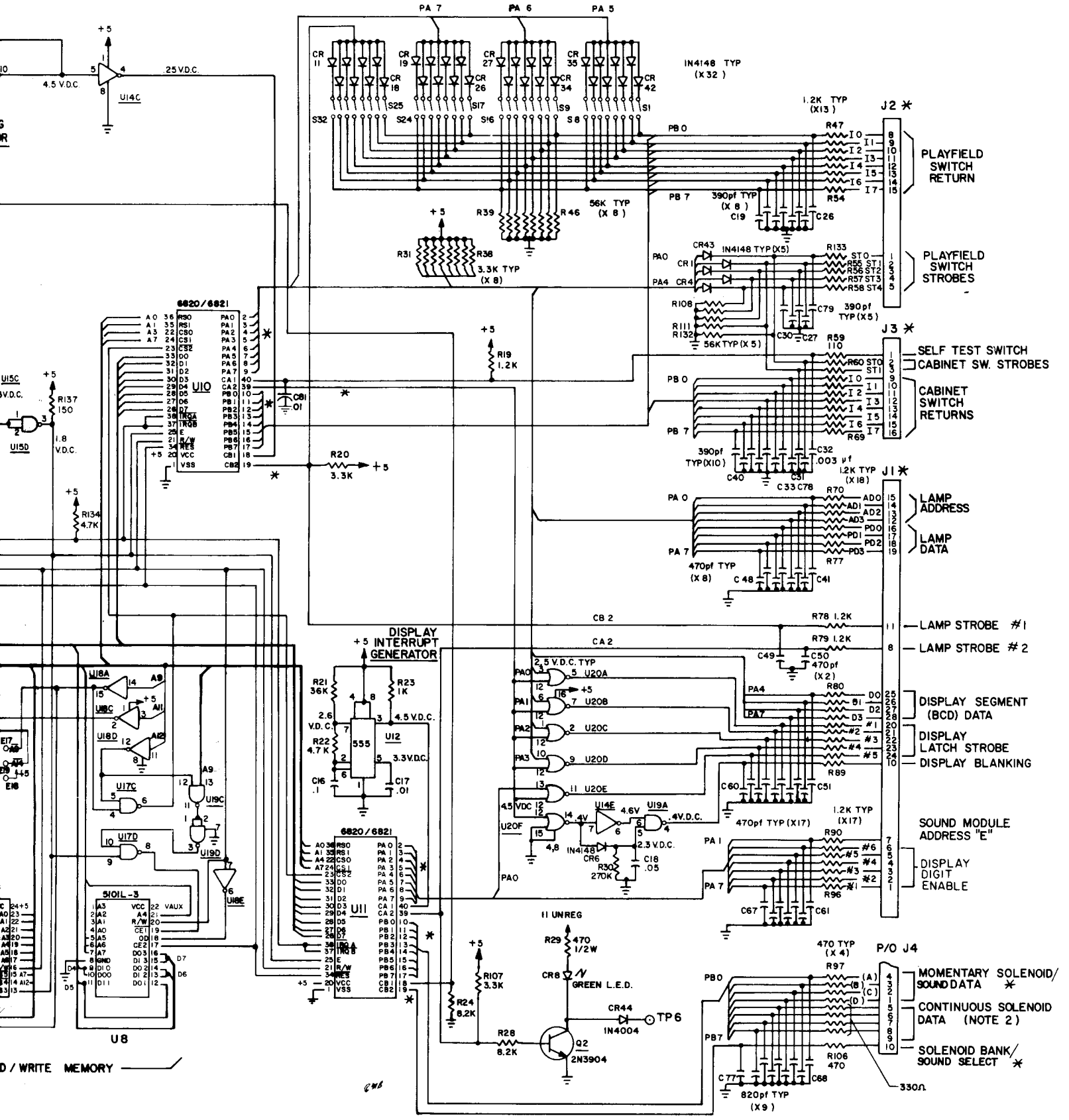

ALL DESIGN, OPERATIVE AND PROCESS DATA PERTAINING TO THE ARTICLE SHOWN ON THIS SHEET IS THE PROPERTY OF BALLY MFG. CORP., CHICAGO, ILL. THIS INFORMATION IS DISCLOSED IN CONFIDENCE AND IS NOT TO BE COPIED, REPRODUCED, REVEALED TO OR APPROPRIATED BY OTHERS, IN PART OR IN WHOLE, WITHOUT THE EXPRESS CONSENT OF THE OWNERS. THE PRINT IS LOANED AND MUST NOT BE USED IN ANY MANNER DETRIMENTAL TO THE INTEREST OF THE OWNERS, AND MUST BE RETURNED ON DEMAND.

No.	LET.	CHANGE	DATE	BY	CK
1	A	A9 was VCC2 on U1, U2, U6 A10 was CS	11-7-78	S.T.	

REMOVE ALL BURRS

TOLERANCES ON DIMENSIONS UNLESS OTHERWISE SPECIFIED
FRACTIONS ± 1/64
DECIMALS ± .005
ANGLES ± 1°

DO NOT SCALE DRAWING

DR. BY E.V.	DATE 5-11-78	
CK. BY S.G.M.	DATE 5-15-78	
APP'D BY	DATE	
APP'D BY	DATE	
FINISH:		
HARDENING:		

Bally MANUFACTURING CORP.
2640 BELMONT AVENUE
CHICAGO, ILLINOIS

1119-E

PRINT CONTROL	PRINT	PLAN	ENG.	TOOL DESIGN	QUAL. DEPT.	ENG. INSP.	TOOL INSP.	MAIN. INSP.		TOTAL	SCALE

NAME: M.P.U. CONTROL BOARD SCHEMATIC

ASSEM. NO. USED ON W

MATERIAL

PART NO. W-1181-3c

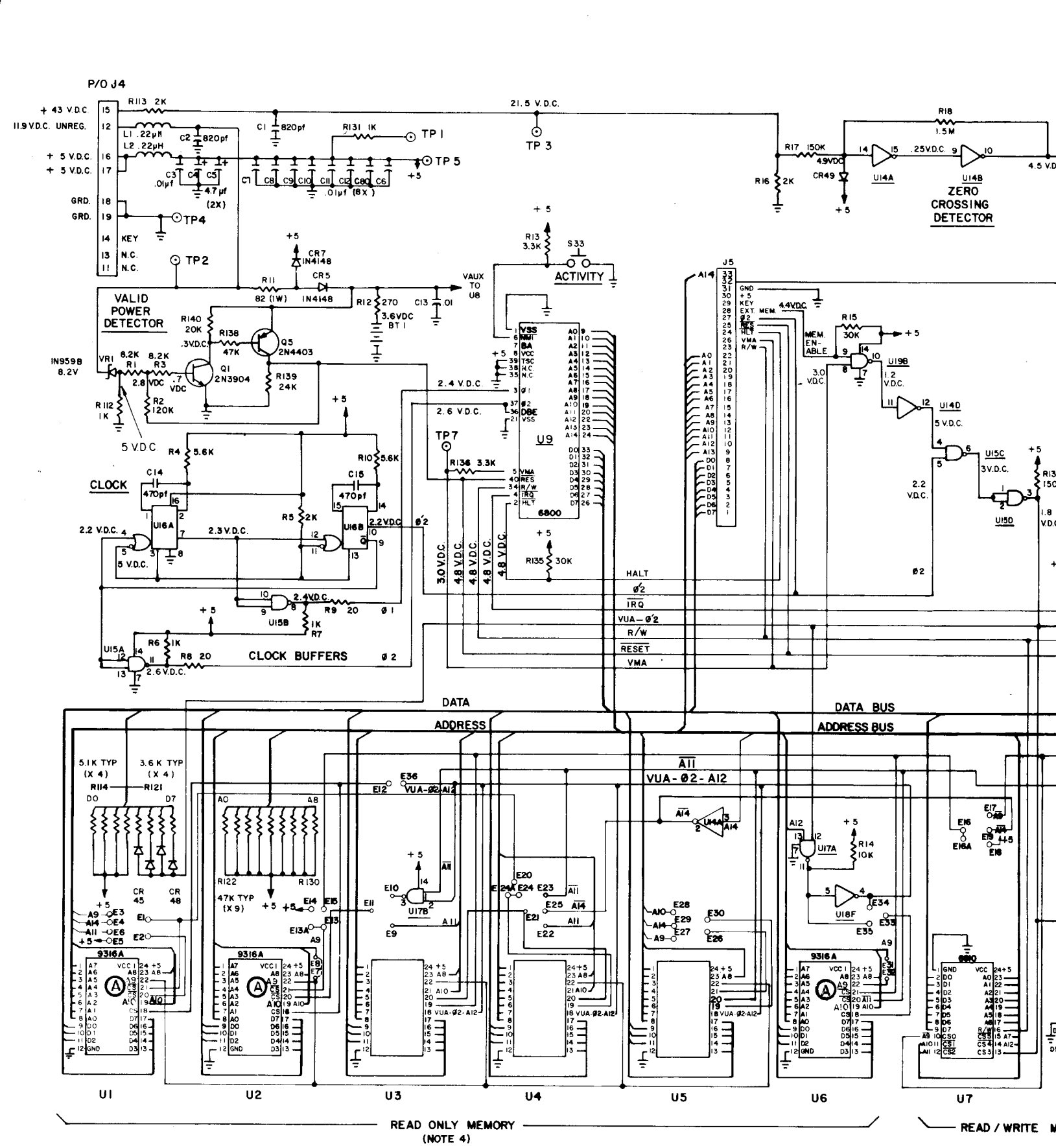

NOTES

1. ✳ INDICATES "AID" TEST POINT.
2. REMOVE A3J4 BEFORE USING AS AID TEST POINT
3. PREFIX ALL REFERENCE DESIGNATIONS WITH "A4"
4. EXACT CHIP COMPLEMENT USED IN SOCKETS U1 THRU U6 CAN VARY FOR DIFFERENT GAMES AND PRODUCTION LOTS. TABLES OF MEMORY CHIPS AND CORRESPONDING JUMPERS FOR DIFFERENT GAMES AVAILABLE FROM BALLY FIELD SERVICE DEPARTMENT.

W-1184-1c

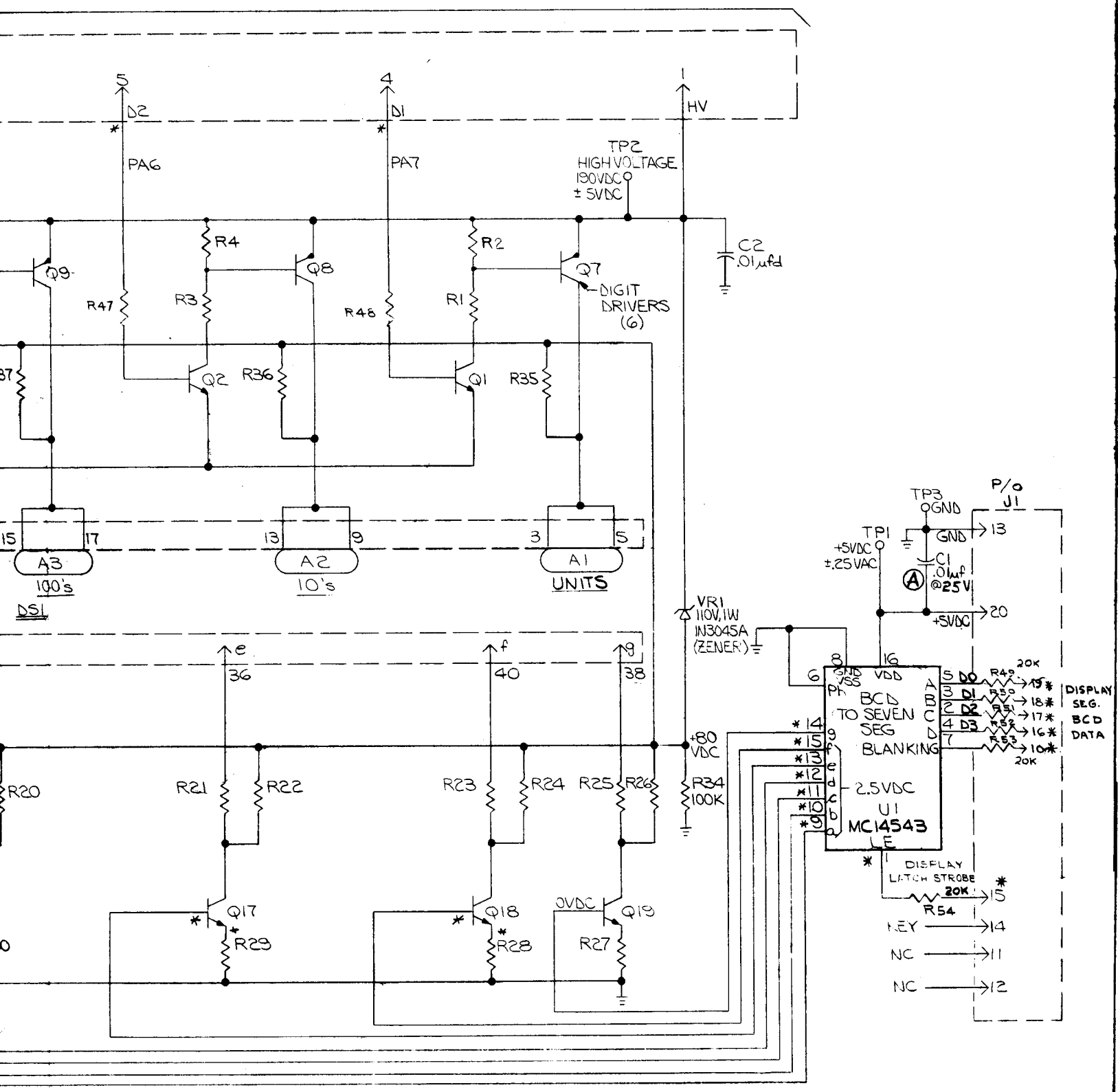

DIE SIZE — C.C. — FT. PER M — LBS. PER M —

ALL DESIGN, OPERATIVE AND PROCESS DATA PERTAINING TO THE ARTICLE SHOWN ON THIS SHEET IS THE PROPERTY OF BALLY MFG. CORP. CHICAGO, ILL. THIS INFORMATION IS DISCLOSED IN CONFIDENCE AND IS NOT TO BE COPIED, REPRODUCED, REVEALED TO OR APPROPRIATED BY OTHERS, IN PART OR IN WHOLE, WITHOUT THE EXPRESS CONSENT OF THE OWNERS. THE PRINT IS LOANED AND MUST NOT BE USED IN ANY WAY DETRIMENTAL TO THE INTEREST OF THE OWNERS, AND MUST BE RETURNED ON DEMAND.

REMOVE ALL BURRS

TOLERANCES ON DIMENSIONS UNLESS OTHERWISE SPECIFIED
FRACTIONS ±
DECIMALS ±
ANGLES ±

DO NOT SCALE DRAWING

NO.	LET.	CHANGE	DATE	BY	CK.
1	A	WAS 500V	4.1.79		J.D.

DR. BY — DATE
CK. BY — DATE
APD BY — DATE
APD BY — DATE
FINISH:
HARDENING:

Bally MANUFACTURING CORP #1120-E
2640 BELMONT AVENUE
CHICAGO, ILLINOIS
ALL NOVELTIES

PRINT CONTROL | PROD CONT. | PUR. DEPT. | ENG. FILE | TOOL DESIGN | CUST DEPT. | INC. INSP. | TRIB. | MACH. SHOP | TOTAL | SCALE

NAME: DISPLAY BOARD SCHEMATIC "A"
ASSEM. NO. USED ON/IN: AS-2518-21
MATERIAL
PART NO. W-1184-1c

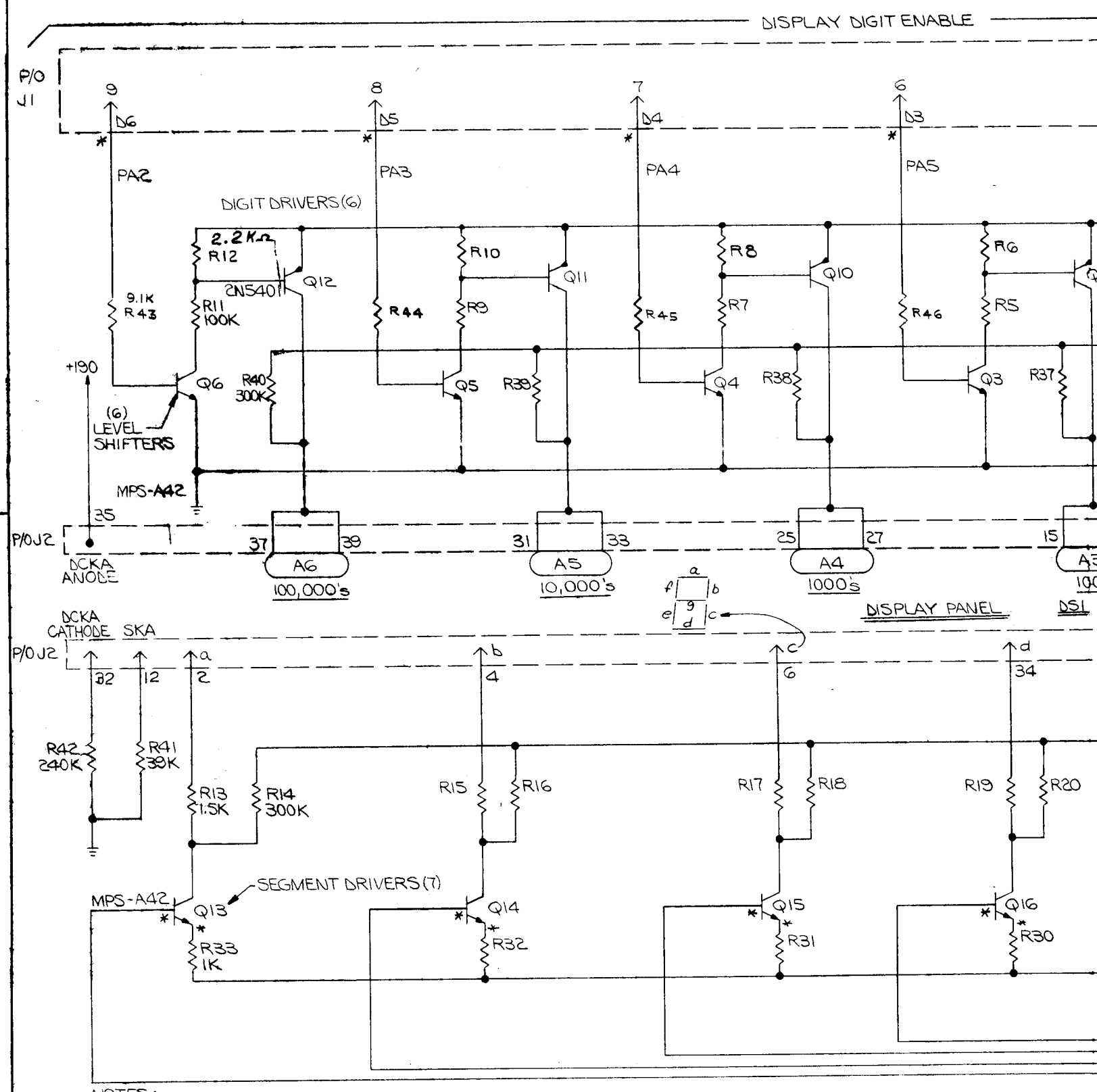

NOTES:

1. UNLESS OTHERWISE SPECIFIED ALL RESISTORS ARE ± 5%, 1/4W.
2. PREFIX ALL REFERENCE DESIG. WITH ASSEMBLY REFERENCE DESIG. "A1"
3. * *INDICATES 'A1D' TEST POINT.*

W-1186-6 c

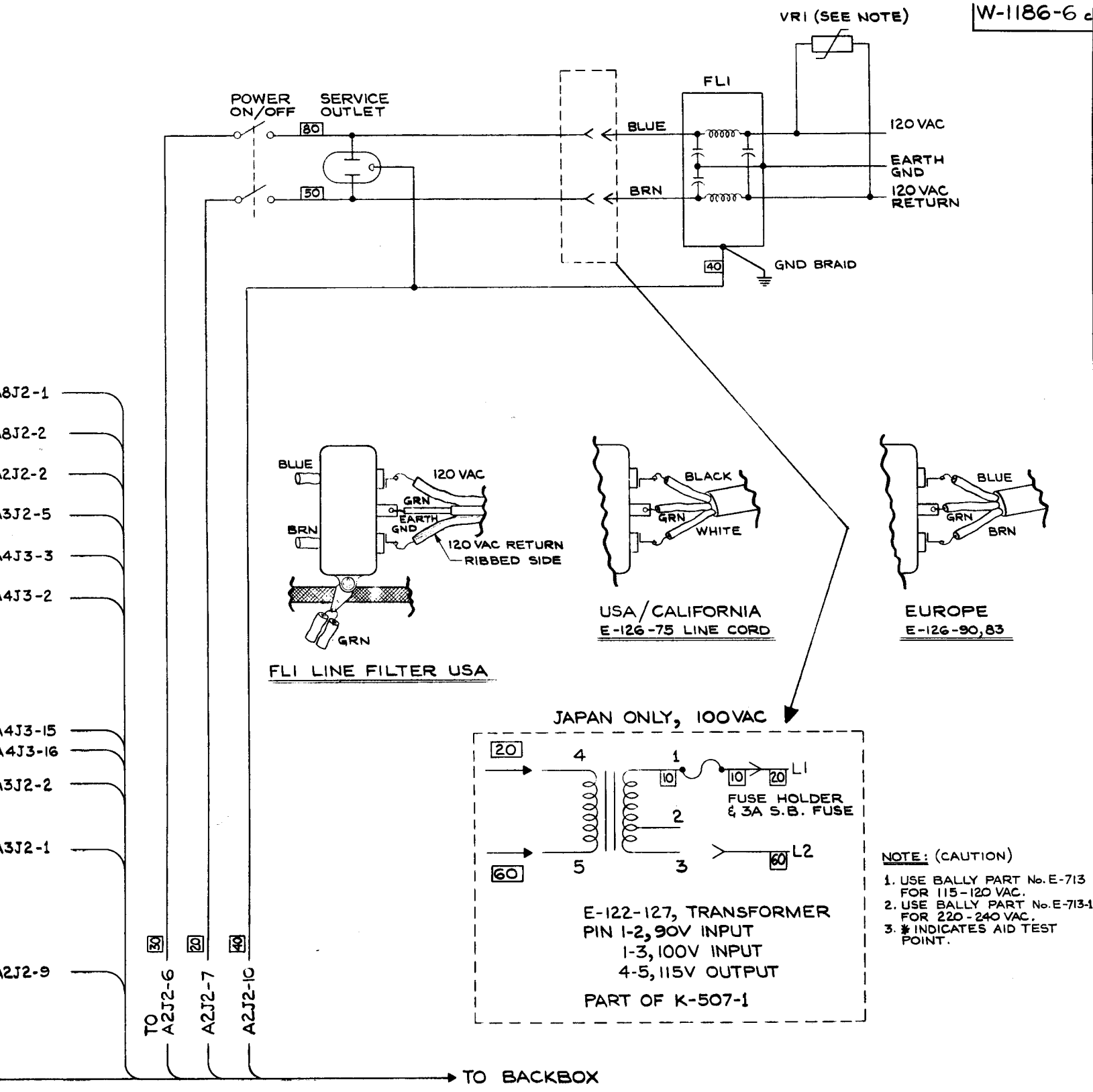

NOTE: (CAUTION)

1. USE BALLY PART No. E-713 FOR 115-120 VAC.
2. USE BALLY PART No. E-713-1 FOR 220-240 VAC.
3. ✱ INDICATES AID TEST POINT.

ET ASS'Y. WIRING

ES ARE IN4004, (E-587-6)

ALL DESIGN, OPERATIVE AND PROCESS DATA PERTAINING TO THE ARTICLE SHOWN ON THIS SHEET IS THE PROPERTY OF BALLY MFG. CORP., CHICAGO, ILL. THIS INFORMATION IS DISCLOSED IN CONFIDENCE AND IS NOT TO BE COPIED, REPRODUCED, REVEALED TO OR APPROPRIATED BY OTHERS, IN PART OR IN WHOLE, WITHOUT THE EXPRESS CONSENT OF THE OWNERS. THE PRINT IS LOANED AND MUST NOT BE USED IN ANY MANNER DETRIMENTAL TO THE INTEREST OF THE OWNERS, AND MUST BE RETURNED ON DEMAND.

LET.	CHANGE	DATE	BY	CK.

REMOVE ALL BURRS

TOLERANCES ON DIMENSIONS UNLESS OTHERWISE SPECIFIED
FRACTIONS ±
DECIMALS ±.
ANGLES ±

DO NOT SCALE DRAWING

DR. BY E.V.	DATE 3-28-79
CK. BY	DATE
AP'D BY J D	DATE 4-5-79
AP'D BY DBm	DATE 4-5-79
FINISH	

Bally MANUFACTURING CORP.
2640 BELMONT AVENUE
CHICAGO, ILLINOIS

1161-E

PRINT CONTROL	PROD. CONT.	PUR.	ENG.	T. B.	COST	INC. INSP.	TOOL INSP.	CONAR	VENB.	TOTAL	SCALE
											~

NAME WIRING DIAGRAM ELECTRONIC

ASSEM. No.

MATERIAL

PART No. W-1186-6 c

SCAN LINES, INC. CHICAGO

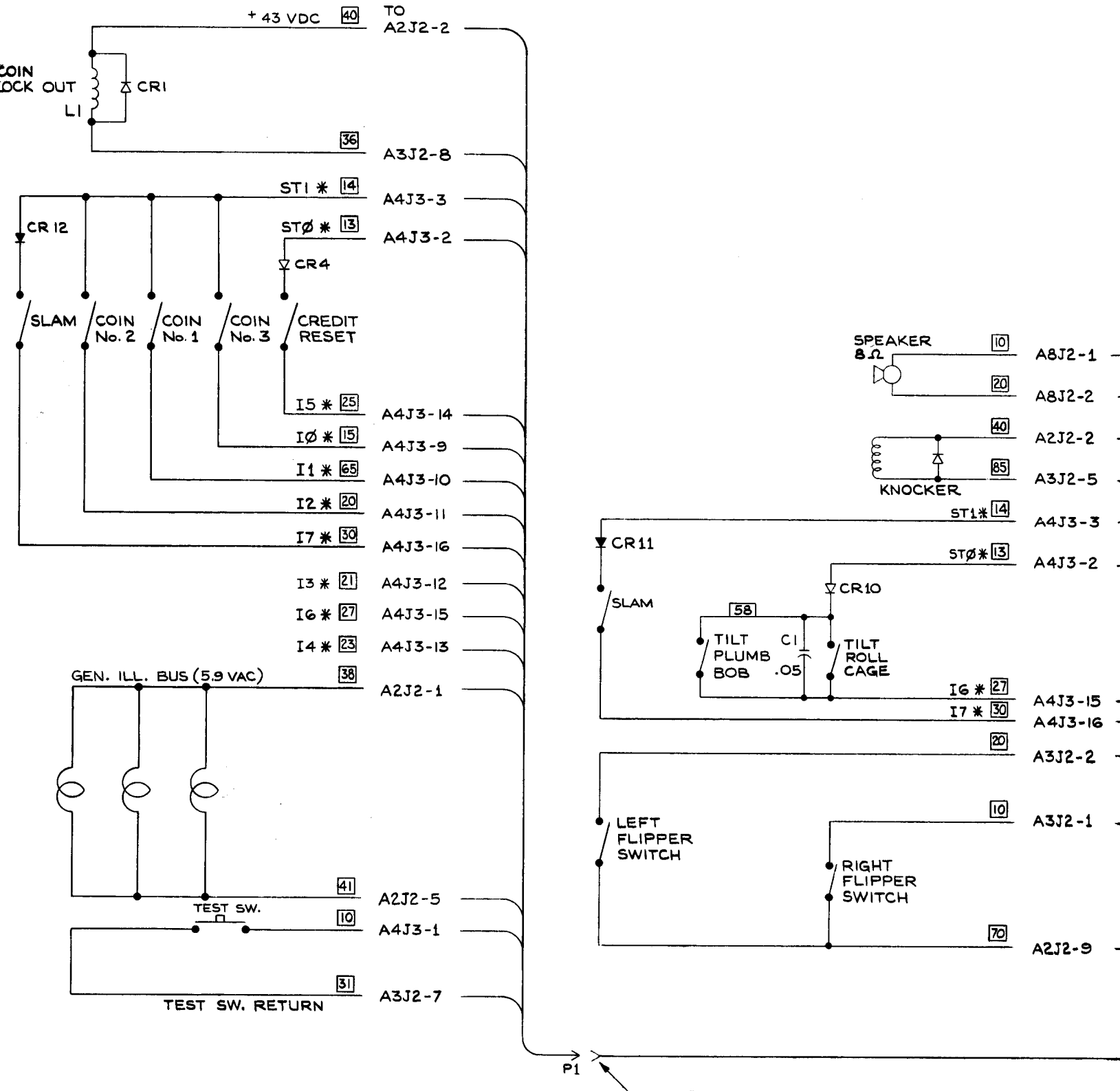

TO	J1 PIN	TO	J1 PIN
A4J3-9	1	A4J3-3	11
A4J3-10	2	A2J2-2	15
A4J3-11	3	A3J2-8	16
A4J3-12	4	A2J2-1	17
A4J3-13	5	A2J2-5	18
A4J3-14	6	A4J3-1	19
A4J3-15	7	A3J2-7	20
A4J3-16	8		
A4J3-2	10		

DOOR PLUG

A7 CABINET ASS'Y

NOTE :- DIODES ARE IN

ER.	DESCRIPTION	TOOL No.

FORM 4032

L PART NO. W-1211 c

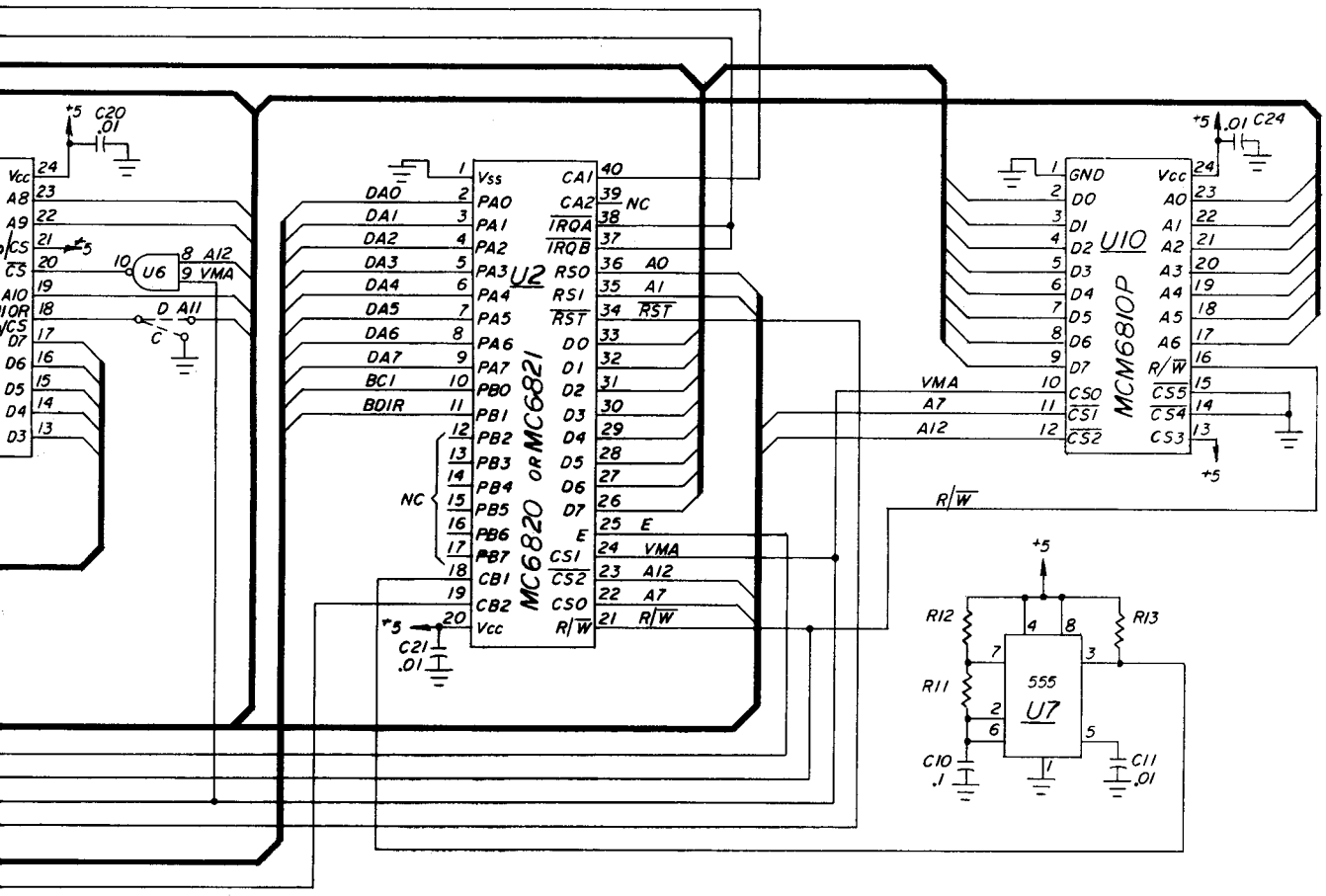

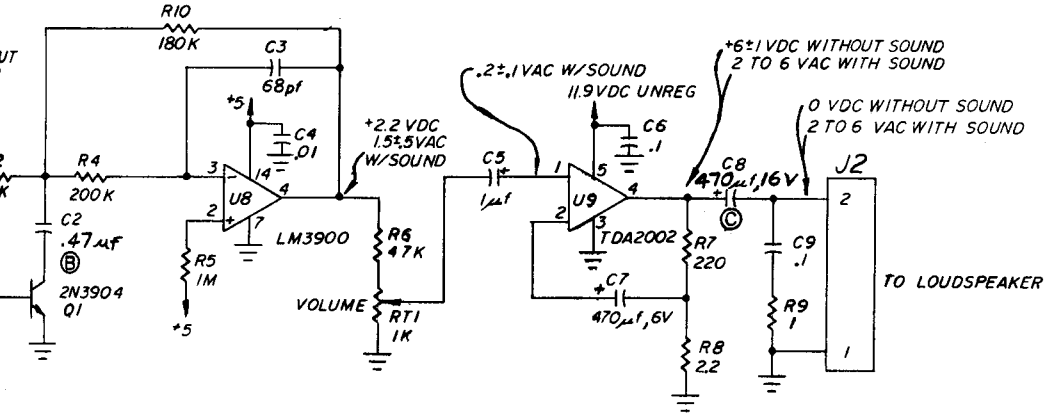

AM IS USED (6802 WITHOUT U10).
" " " (6808/6810, U10).
OM) " " (G1 9316B INTEL 2716 OR EQUIV.).
" " (T1 TMS 2532 TMS 4732 OR EQUIV.).
D ON THIS ASSEMBLY.
ALL RESISTOR VALUES ARE IN OHMS,
MMFD'S.
ATIONS WITH A8.

ALL DESIGN, OPERATIVE AND PROCESS DATA PERTAINING TO THE ARTICLE SHOWN ON THIS SHEET IS THE PROPERTY OF BALLY MFG. CORP. CHICAGO, ILL. THIS INFORMATION IS DISCLOSED IN CONFIDENCE AND IS NOT TO BE COPIED, REPRODUCED, REVEALED TO OR APPROPRIATED BY OTHERS, IN PART OR IN WHOLE, WITHOUT THE EXPRESS CONSENT OF THE OWNERS. THE PRINT IS LOANED AND MUST NOT BE USED IN ANY MANNER DETRIMENTAL TO THE INTEREST OF THE OWNERS, AND MUST BE RETURNED ON DEMAND.

NO.	LET.	CHANGE	DATE	BY
3	C	WAS 220uf 25V	1-29-80	J.D.
2	B	WAS .1	1-29-80	J.D.
1	A	TEST INFO ADDED	12-11-79	NRW

REMOVE ALL BURRS
TOLERANCES ON DIMENSIONS UNLESS OTHERWISE SPECIFIED
FRACTIONS ± .008
DECIMALS ± .003
EXCEPT HOLE DIA. ±
ANGLES ± 1/2°
DO NOT SCALE DRAWING

DR. BY NRW DATE 9-13-79
CK. BY DATE 9-19-79
APPD BY DATE 9-27-79
DATE 9/27/79
FINISH:
HARDENING:

Bally MANUFACTURING CORP.
2640 BELMONT AVE. CHICAGO, ILLINOIS
SEP 2 1979
1173

PRINT CONTROL | DIE SIZE- | C.C.- | FT. PER M- | LBS. PER M-

NAME COMPUTER SOUND MODULE A8 SCHEMATIC
ASSEM. NO. USED AS-2518-51
SCALE NL
MATERIAL
CODE
PART NO. W-1211 c

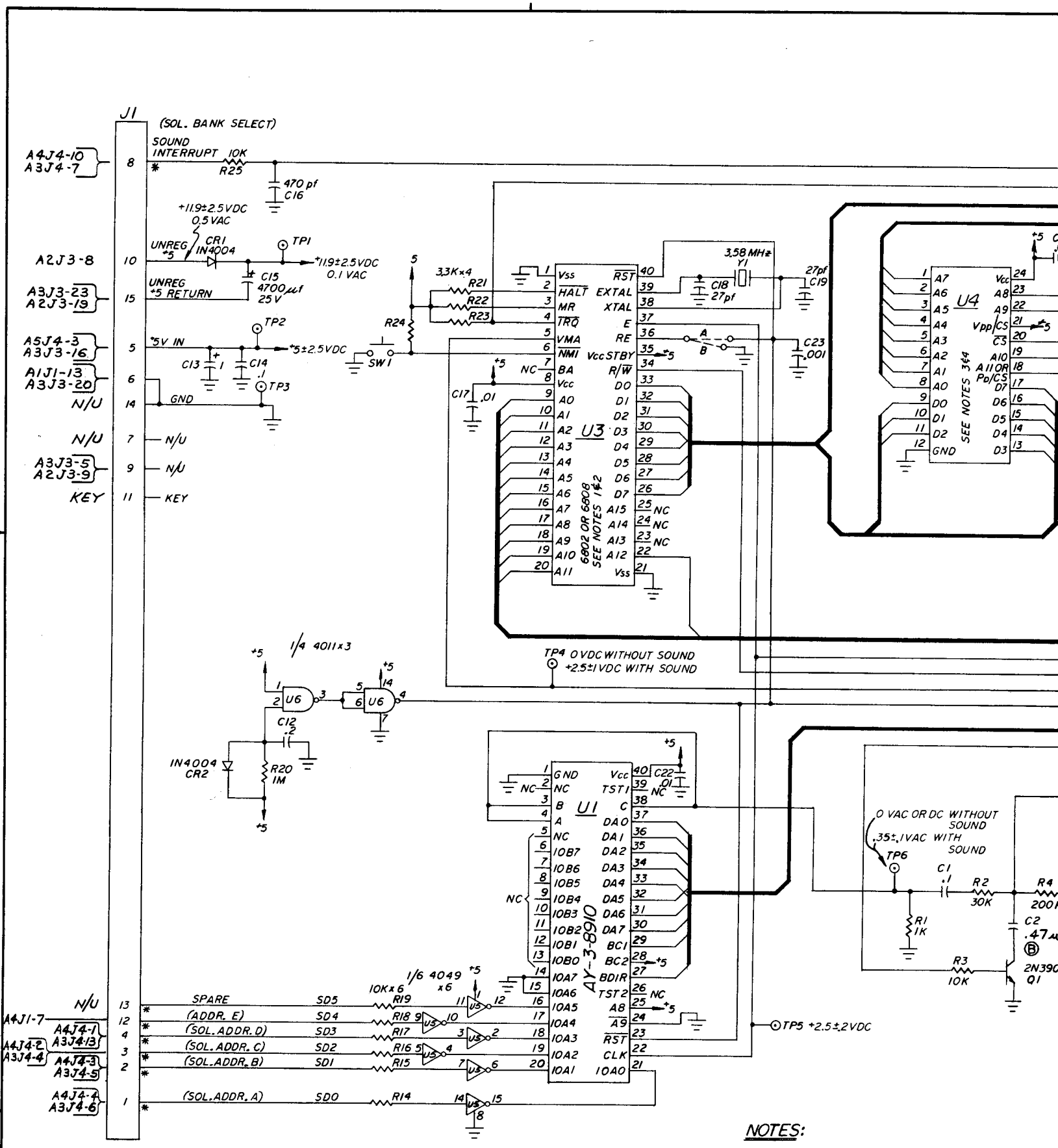

NOTES:

1. USE JUMPER A IF INTERNAL RAM IS USED
2. " " B " EXTERNAL " " "
3. " " C " 2K ROM (EPROM) " " "
4. " " D " 4K " " " " "
5. U7, R12, R11, R13, C10, C11 NOT USED ON THIS ASS
6. UNLESS OTHERWISE INDICATED, ALL RESISTO
   ALL CAPACITOR VALUES ARE IN MMFD'S.
7. PREFIX ALL REFERENCE DESIGNATIONS WITH
8. * INDICATES "AID" TEST POINT.

OPER.	DEPT.	DESCRIPTION	TOOL NO.

RIDGEFIELD CONN. 06877 N55983

G PART NO. W-1185-1c

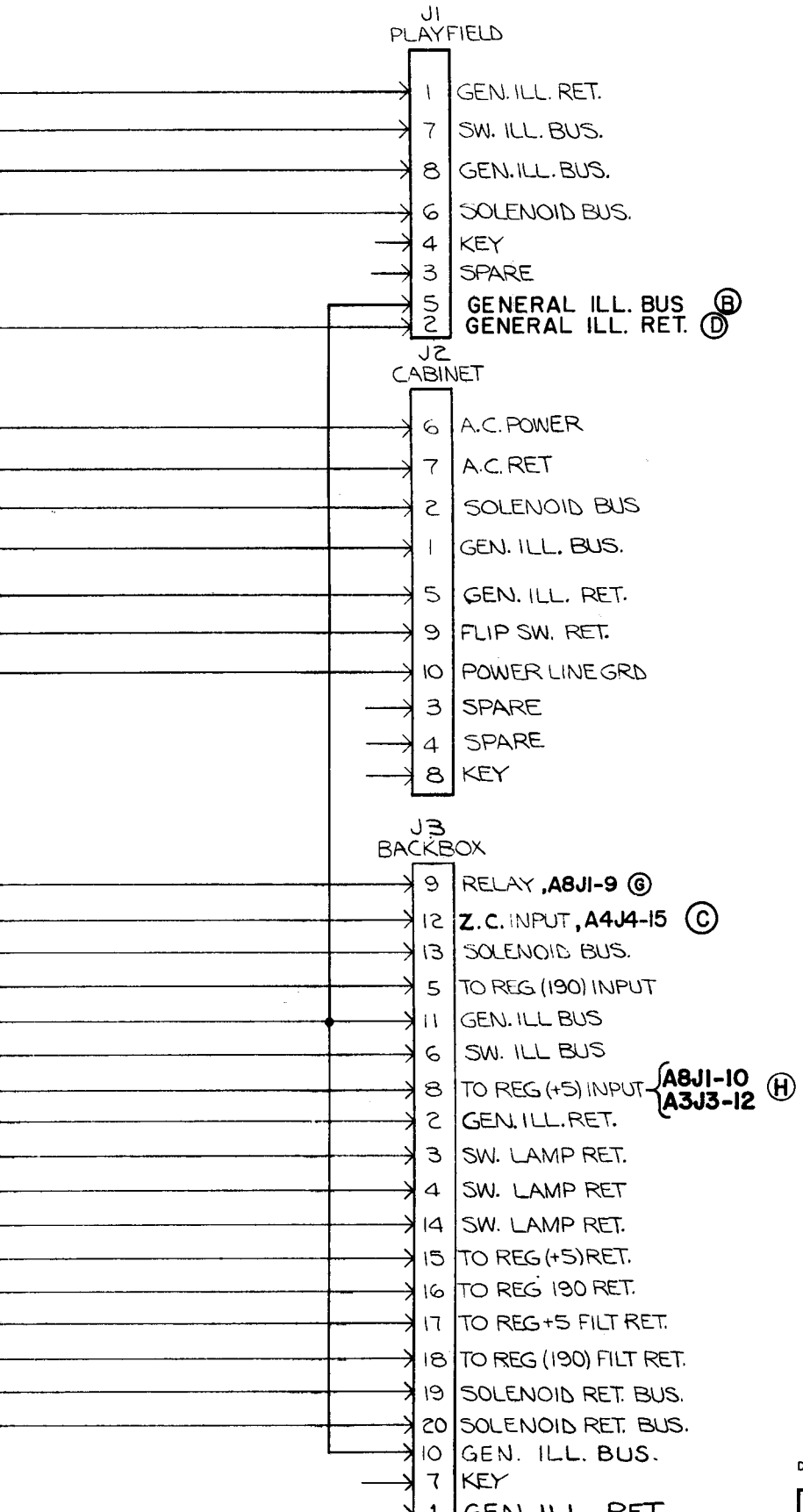

NOTES:

1. WIRE A.C. POWER AND TERMINALS PER TABLE 1.
2. VOLTAGES SHOWN ARE FOR GAME IN POWER-UP CONDITION.
3. PREFIX ALL REFERENCE DESIGNATIONS WITH A2.

TABLE 1
POWER LINE CONNECTIONS

LINE VOLTAGE VRMS A.C.	STRAP TERMINALS	APPLY POWER TO TERMINALS
115	1 TO 3 AND 9 TO 11	1 AND 9
120	1 TO 3 AND 5 TO 7	1 AND 5
220	3 TO 5	1 AND 12
240	3 TO 5	1 AND 7

DIE SIZE — C.C. — FT. PER M — LBS. PER M —

ALL DESIGN, OPERATIVE AND PROCESS DATA PERTAINING TO THE ARTICLE SHOWN ON THIS SHEET IS THE PROPERTY OF BALLY MFG. CORP., CHICAGO, ILL. THIS INFORMATION IS DISCLOSED IN CONFIDENCE AND IS NOT TO BE COPIED, REPRODUCED, REVEALED TO OR APPROPRIATED BY OTHERS, IN PART OR IN WHOLE, WITHOUT THE EXPRESS CONSENT OF THE OWNERS. THE PRINT IS LOANED AND MUST NOT BE USED IN ANY MANNER DETRIMENTAL TO THE INTEREST OF THE OWNERS, AND MUST BE RETURNED ON DEMAND.

NO.	LET.	CHANGE	DATE	BY	CK.
6	H	ADDED A8J1-10, A3J3-12	10-1-79	E.V.	JD
5	G	ADDED A8J1-9	9-12-79	E.V.	J.D
4	F	ERASED (6B)	12-6-78		JD
3	E	V21 READ R3	11-2-78	NR	
2	D	J1-2 READ "GND"			
2	C	J3-12 READ "Z.C INPUT"			
1	B	ADDED JUMPER J1-5 TO J3-1			
1	A	F2 WAS 5.0A			

REMOVE ALL BURRS

TOLERANCES ON DIMENSIONS UNLESS OTHERWISE SPECIFIED
FRACTIONS ±
DECIMALS ±
ANGLES ±

DO NOT SCALE DRAWING

DR. BY — DATE 2-6-76
CK. BY CSDN — DATE 2-11-76
AP'D BY — DATE
APP'D BY — DATE 2/17/77
FINISH: N
HARDENING: N

Bally MANUFACTURING CORP.
2640 BELMONT AVENUE
CHICAGO, ILLINOIS
FEB 21 1977
1074-E

PRINT CONTROL | PROD. CONT. | PUR. DEPT. | ENG. FILE | TOOL DESIGN | COST DEPT. | ING. INSP. | TOOL INSP. | MACH. INSP. | TOTAL | SCALE N

NAME POWER TRANSFORMER MODULE SCHEMATIC

ASSEM. NO. USED ON/W N

MATERIAL

PART NO. W-1185-1c

TRANSFORMER ASSEMBLY A2

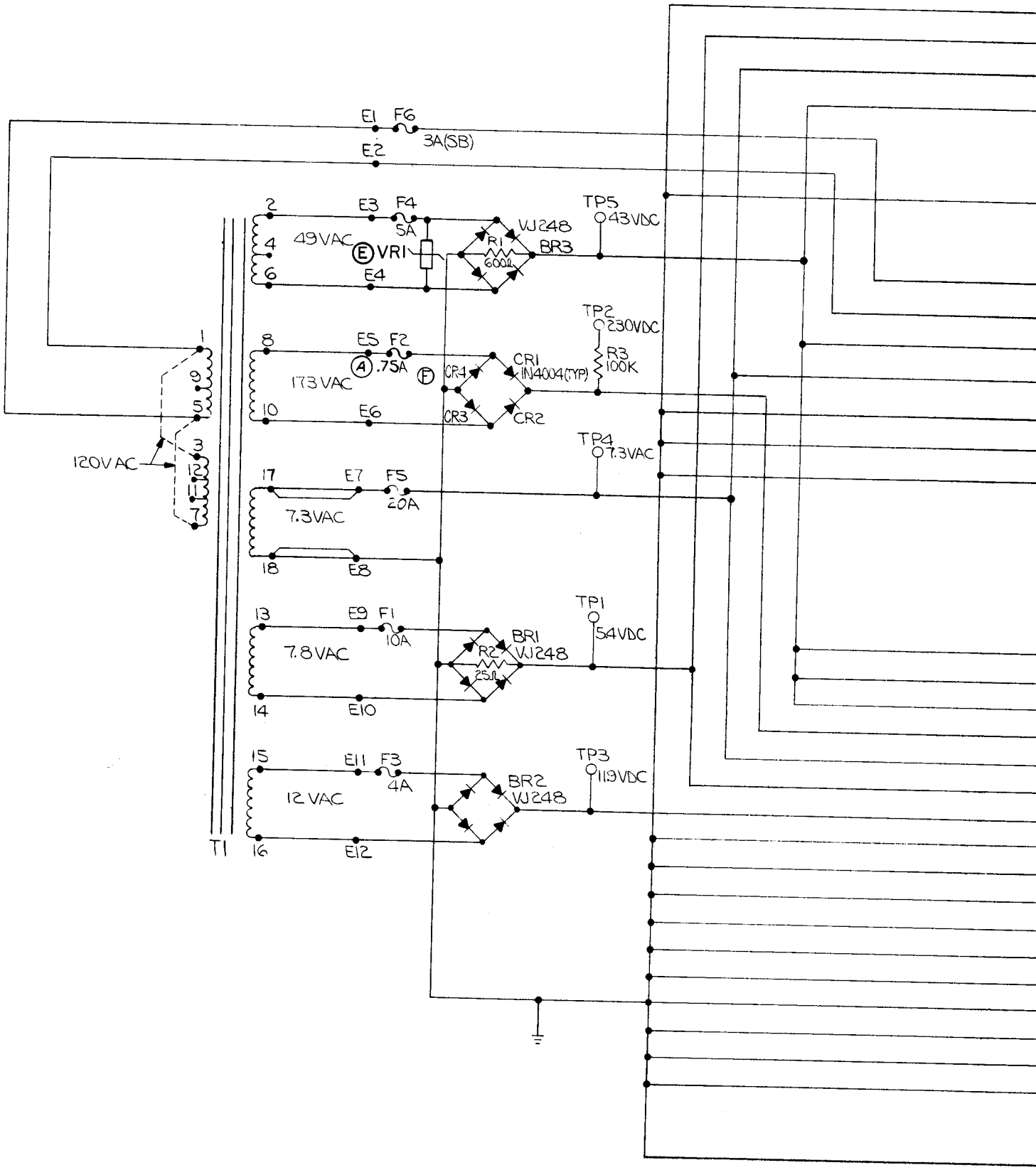

PER.	DEPT.	DESCRIPTION	TOOL No.

DIETZGEN 196H

G PART NO. W-1182-21 c

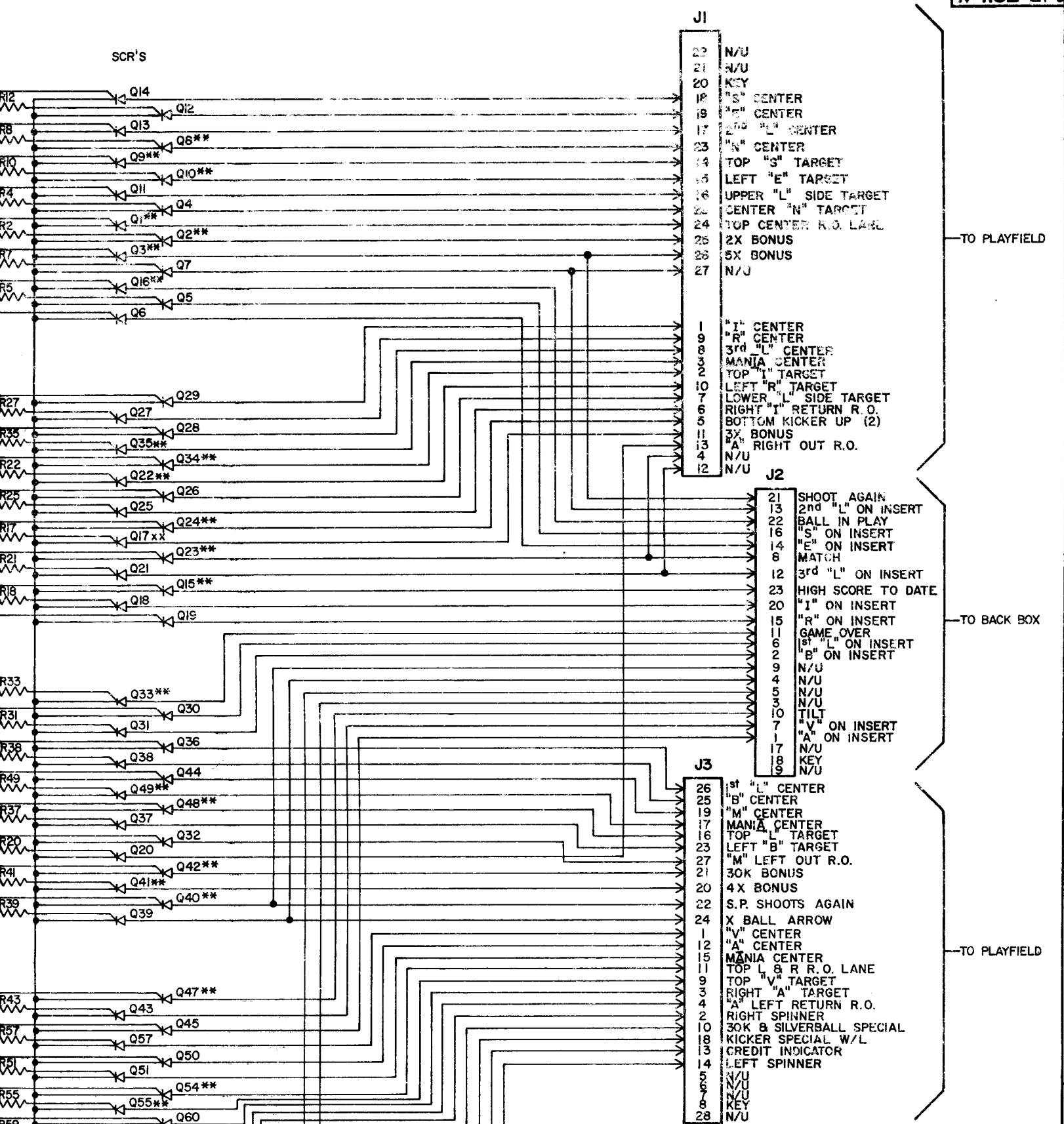

ALL DESIGN, OPERATIVE AND PROCESS DATA PERTAINING TO THE ARTICLE SHOWN ON THIS SHEET IS THE PROPERTY OF BALLY MFG. CORP. CHICAGO, ILL. THIS INFORMATION IS DISCLOSED IN CONFIDENCE AND IS NOT TO BE COPIED, REPRODUCED, RELEASED TO OR APPROPRIATED BY OTHERS, IN PART OR IN WHOLE, WITHOUT THE EXPRESS CONSENT OF THE OWNERS. THE PRINT IS LOANED AND MUST NOT BE USED IN ANY MANNER DETRIMENTAL TO THE INTEREST OF THE OWNERS, AND MUST BE RETURNED ON DEMAND

NO.	LET.	CHANGE	DATE	BY

REMOVE ALL BURRS

TOLERANCES ON DIMENSIONS UNLESS OTHERWISE SPECIFIED
FRACTIONS ± .008
DECIMALS ± .003
EXCEPT HOLE DIA. ±
ANGLES ±

DO NOT SCALE DRAWING

DR. BY E. V.	DATE 6-8-79	Bally MANUFACTURING CORP. 2640 BELMONT AVENUE CHICAGO, ILLINOIS #1157
CK. BY	DATE	
AP'D BY	DATE	PRINT CONTROL / DIE SIZE: / C.C.: / FT. PER M: / LBS. PER M:
AP'D BY	DATE	
FINISH:		NAME: A5 LAMP DRIVER SCHEMATIC / ASSEM. NO. USED / SCALE
HARDENING:		MATERIAL: SILVER BALL MANIA / CODE / PART NO. W-1182-21 c

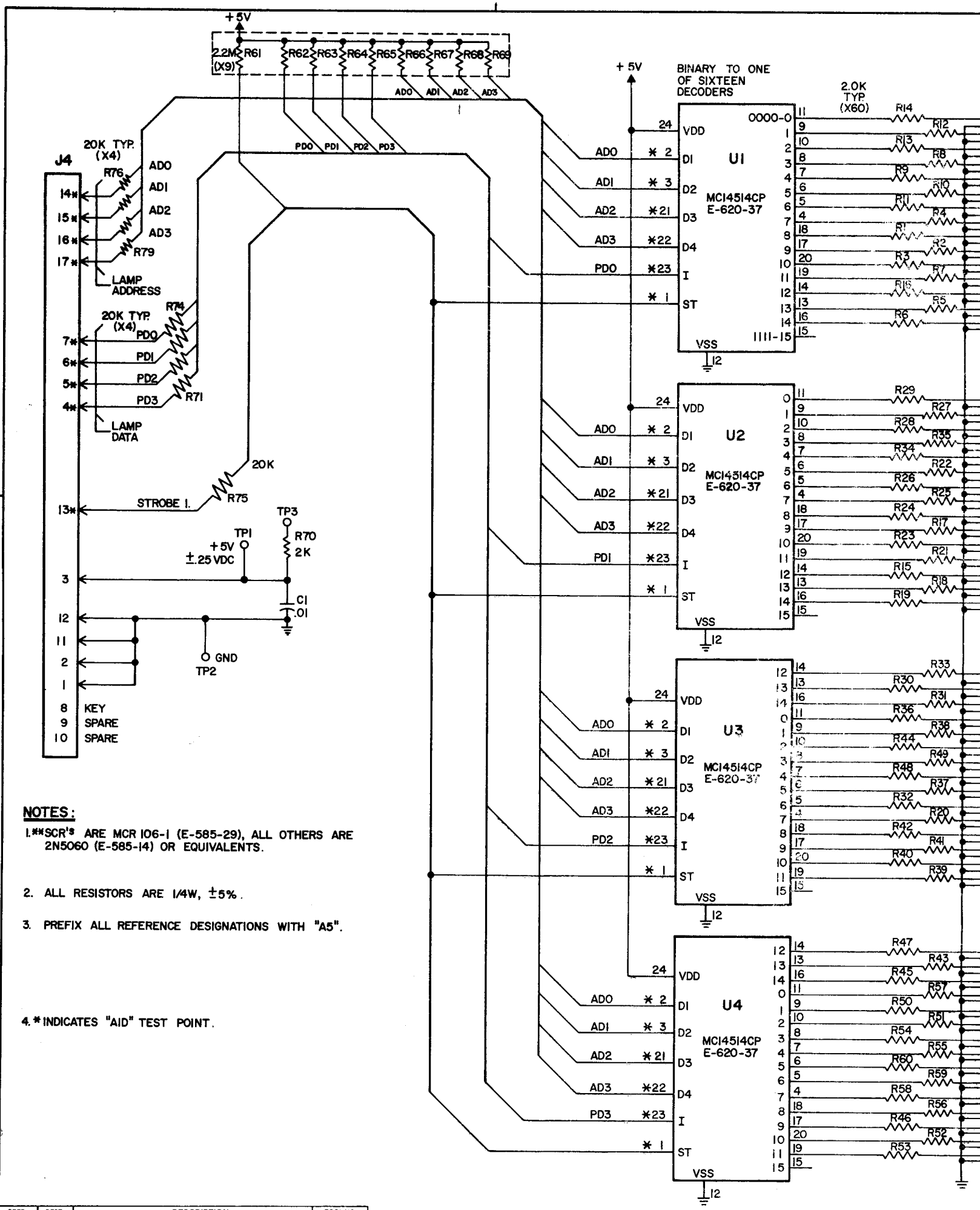

NOTES:

1. **SCR'S ARE MCR 106-1 (E-585-29), ALL OTHERS ARE 2N5060 (E-585-14) OR EQUIVALENTS.

2. ALL RESISTORS ARE 1/4W, ±5%.

3. PREFIX ALL REFERENCE DESIGNATIONS WITH "A5".

4. * INDICATES "AID" TEST POINT.

OPER.	DEPT.	DESCRIPTION	TOOL NO.

TELEDYNE POST N35983

G W-1192-17 c

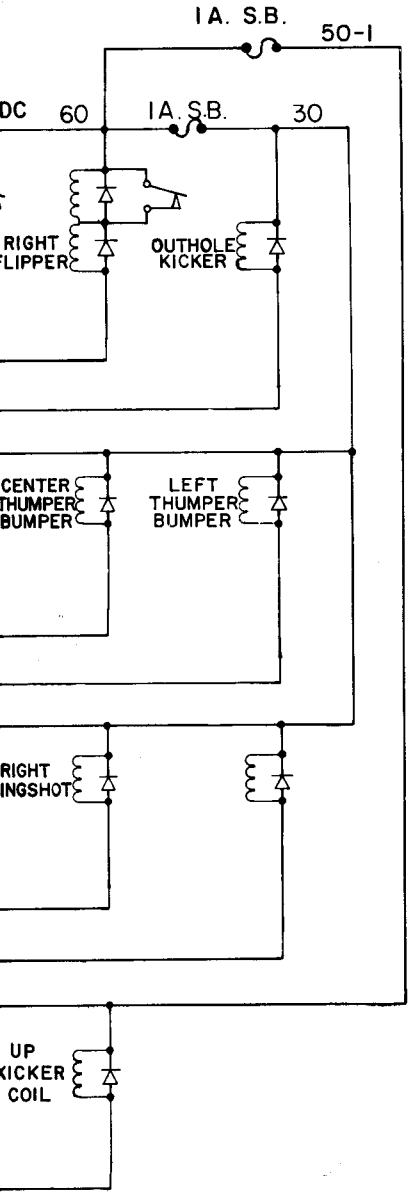

58	A5J1-18 "S" CENTER	5.4 VDC
60	A5J1-19 "E" CENTER	
57	A5J1-17 2nd "L" CENTER	
56	A5J1-23 "N" CENTER	
54	A5J1-14 TOP "S" TARGET	
13	A5J1-15 LEFT "E" TARGET	
12	A5J1-16 UPPER "L" SIDE TARGET	
78	A5J1-28 CENTER "N" TARGET	
50	A5J1-24 TOP CENTER LANE R.O.	
90	A5J1-25 2X BONUS	
91	A5J1-26 5X BONUS	
53	A5J1-27 N/U	
41	A5J1-1 "I" CENTER	
52	A5J1-9 "R" CENTER	
51	A5J1-8 3rd "L" CENTER	
45	A5J1-3 MANĪA CENTER	
43	A5J1-2 TOP "I" TARGET	
23	A5J1-10 LEFT "R" TARGET	
34	A5J1-7 LOWER "L" SIDE TARGET	
25	A5J1-6 RIGHT "I" RETURN R.O.	
48	A5J1-5 BOTTOM KICKER UP (2)	
65	A5J1-11 3X BONUS	
35	A5J1-4 N/U	
61	A5J1-12 N/U	
96	A5J1-13 "A" RIGHT OUT R.O.	
38	A5J3-26 1st "L" CENTER	
36	A5J3-25 "B" CENTER	
67	A5J3-19 "M" CENTER	
27	A5J3-17 MANĪĀ CENTER	
25	A5J3-16 TOP "L" TARGET	
98	A5J3-23 LEFT "B" TARGET	
40	A5J3-27 "M" LEFT OUT R.O.	
30	A5J3-21 30K BONUS	
64	A5J3-20 4X BONUS	
23	A5J3-22 SAME PLAYER S.A.	
72	A5J3-24 X BALL ARROW	
10	A5J3-1 "V" CENTER	
21	A5J3-12 "A" CENTER	
53	A5J3-15 MĀNIA CENTER	
20	A5J3-11 TOP L & R R.O. LANE	
15	A5J3-9 TOP "V" TARGET	
13	A5J3-13 CREDIT INDICATOR	
14	A5J3-4 "A" LEFT RETURN R.O.	
95	A5J3-2 RIGHT SPINNER	
91	A5J3-10 30K & SILVERBALL SPC'L.	
56	A5J3-18 KICKER SPECIAL W/L	
81	A5J3-3 RIGHT "A" TARGET	
84	A5J3-14 LEFT SPINNER	
20	A2J1-7 FEATURE LAMP BUS	

6

IN 4148, (E-587-14)

ALL DESIGN, OPERATIVE AND PROCESS DATA PERTAINING TO THE ARTICLE SHOWN ON THIS SHEET IS THE PROPERTY OF BALLY MFG. CORP., CHICAGO, ILL. THIS INFORMATION IS DISCLOSED IN CONFIDENCE AND IS NOT TO BE COPIED, REPRODUCED, REVEALED TO OR APPROPRIATED BY OTHERS, IN PART OR IN WHOLE, WITHOUT THE EXPRESS CONSENT OF THE OWNERS. THE PRINT IS LOANED AND MUST NOT BE USED IN ANY MANNER DETRIMENTAL TO THE INTEREST OF THE OWNERS, AND MUST BE RETURNED ON DEMAND.

LET.	CHANGE	DATE	BY	CK.

REMOVE ALL BURRS

TOLERANCES ON DIMENSIONS UNLESS OTHERWISE SPECIFIED
FRACTIONS ± 1/64
DECIMALS ± .005
ANGLES ± 1°

DO NOT SCALE DRAWING

DR. BY | DATE
CK. BY | DATE
AP'D BY JD | DATE 12-3-79
AP'D BY DBM | DATE 12-3-79
FINISH:
HARDENING:

Bally MANUFACTURING CORP.
2640 BELMONT AVENUE
CHICAGO, ILLINOIS
#1157

PRINT CONTROL → | TOTAL | SCALE

NAME: SWITCH MATRIX
ASSEM. NO. USED ON W
MATERIAL: SILVER BALL MANIA
PART NO. W-1192-17c

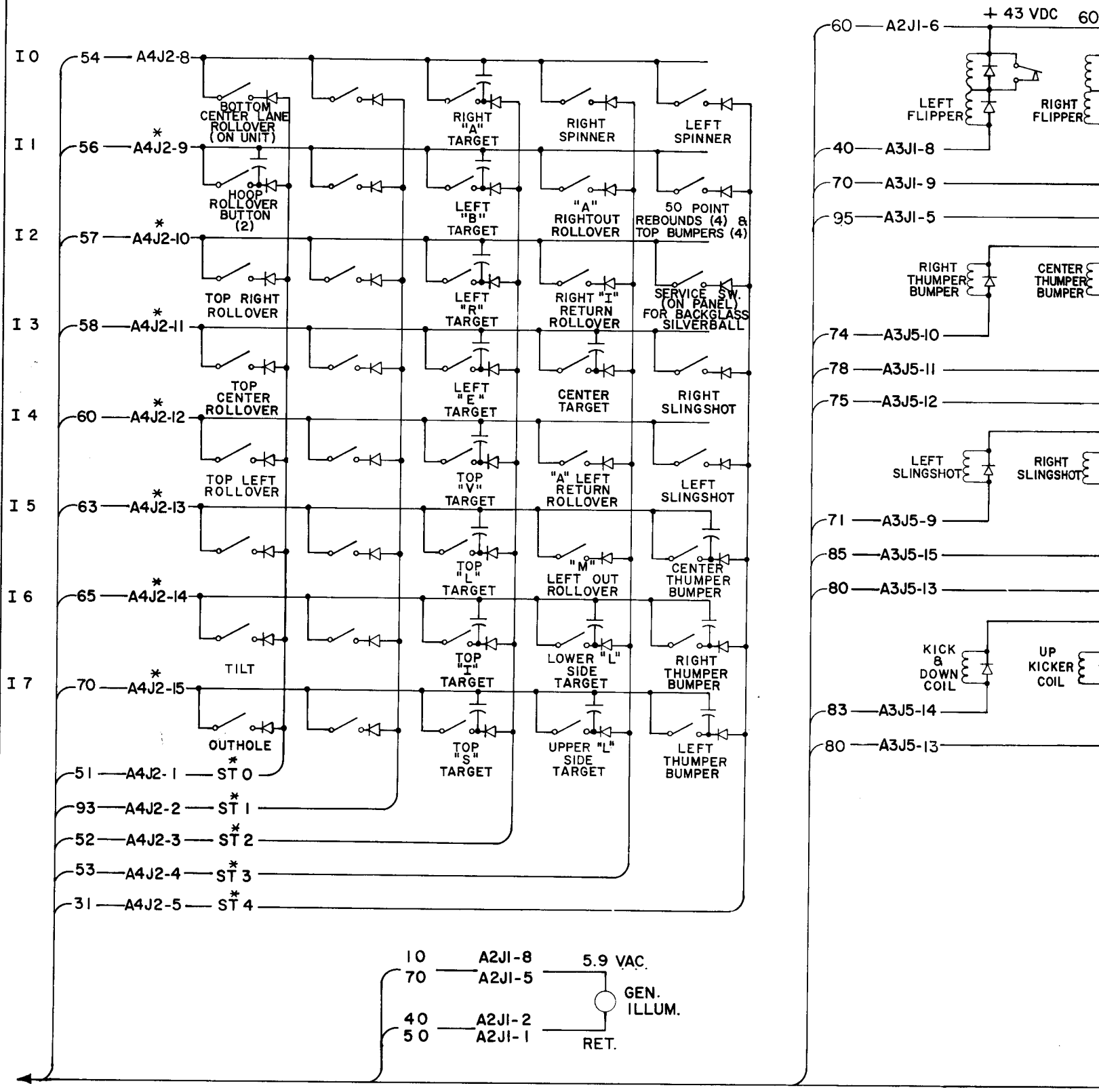

PLAYFIELD A6

NOTES

1. INDICATES NOT USED
2. N/U = NOT USED ON PLAYFIELD
3. * INDICATES AID TEST POINT
4. COIL DIODES ARE IN4004, (E-587-6) SWITCH DIODES ARE IN 4148,
   ALL CAPACITORS ARE .05 MFD. (E-586-80)

A2 TRANSFORMER

W-1187-17 c

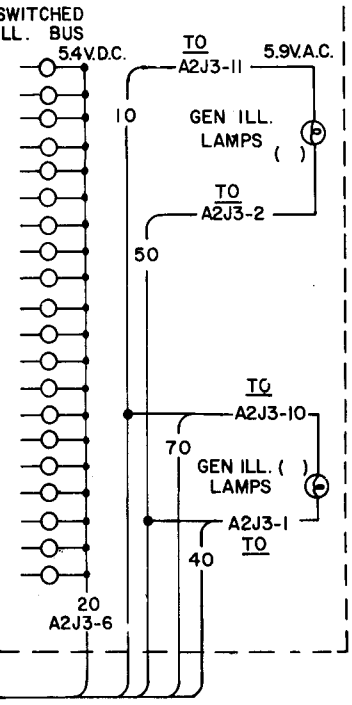

J1	TO
23	1 {A4J4-4 / A3J4-6}
21	2 {A4J4-3 / A3J4-5}
78	3 {A4J4-2 / A3J4-4}
15	4 {A4J4-1 / A3J4-3}
84	5 {A5J4-3 / A3J3-16}
60	6 {A1J1-13 / A3J3-20}
	7 N/U
61	8 {A4J4-10 / A3J4-7}
30	9 {A3J3-5 / A2J3-9}
70	10 A3J3-12
	11 KEY
62	12 A4J1-7
	13 N/U
	14 N/U
13	15 {A3J3-23 / A2J3-19}

SOLID STATE SOUND SYSTEM MODULE A8

J2: 1, 2; 20, 10

J3		TO
40	1	GEN. ILL. RET. (BACKBOX)
50	2	GEN. ILL. RET. (BACKBOX)
18	3	A5J4-2
51	4	A5J4-1
92	5	A3J3-6
20	6	SW. ILL. BUSS
	7	KEY
70	8	A3J3-12, A8J1-10
30	9	A3J3-5, A8J1-9
70	10	GEN. ILL. BUSS
10	11	GEN. ILL. BUSS
90	12	A4J4-15
53	13	SOL. BUSS
58	14	A5J4-11
52	15	A3J3-21
82	16	A3J3-22
56	17	A3J3-10
50	18	A3J3-3
13	19	A3J3-23
57	20	A3J3-24

PLAYFIELD

J1		TO
50	1	GEN. ILL. RET. (PLAY-FIELD)
40	2	GEN. ILL. RET.
	3	SPARE
	4	KEY
70	5	GEN. ILL. BUSS
60	6	SOL. BUSS (PLAYFIELD)
20	7	SW. ILL. BUSS
10	8	GEN. ILL. BUSS

CABINET

J2		TO
38	1	GEN. ILL. BUSS
40	2	SOL. BUSS
	3	SPARE
	4	SPARE GRND.
41	5	GEN. ILL. RET.
30	6	SW. AC POWER
20	7	AC RET.
	8	KEY
70	9	FLIP. SW. RET.
40	10	PWR. LINE GND.

VOLTAGE REGULATOR / SOLENOID DRIVER A3

J2		TO	
51	1	ST 0	PLAY-FIELD SW STROBE
	2	ST 1	
52	3	ST 2	
53	4	ST 3	
31	5	ST 4	
	6	KEY	
	7	N/U	
54	8	I 0	PLAY-FIELD SW RETURN
56	9	I 1	
57	10	I 2	
58	11	I 3	
60	12	I 4	
63	13	I 5	
65	14	I 6	
70	15	I 7	

J3		TO	
10	1	SELF TEST SW.	
13	2	ST 0	SW. CAB. STROBE
14	3	ST 1	
	4	KEY	
	5	N/U	
	6	N/U	
	7	N/U	
	8	N/U	
15	9	I 0	CAB. SW. RET.
65	10	I 1	
20	11	I 2	
21	12	I 3	
23	13	I 4	
25	14	I 5	
27	15	I 6	
30	16	I 7	

J4		TO
	1	N/U
	2	KEY
15	3	A4J4-1
78	4	A4J4-2
21	5	A4J4-3
23	6	A4J4-4
61	7	A4J4-10
25	8	A4J4-7
27	9	A4J4-6
31	10	A4J4-8
36	11	A4J4-5
	12	N/U

J3		TO
	1	N/U
	2	KEY
50	3	A2J3-18
83	4	N/U
30	5	A2J3-9
92	6	A2J3-5
	7	NOTE 1
10	8	A1J1-1
	9	NOTE 1
56	10	A2J3-17
14	11	A4J4-12
70	12	A2J3-8
64	13	A3J3-25
96	14	A4J4-16
54	15	A4J4-17
84	16	A5J4-3
45	17	A1J1-20
94	18	A4J4-18
81	19	A4J4-19
60	20	A1J1-13
52	21	A2J3-15
82	22	A2J3-16
13	23	A2J3-19
57	24	A2J3-20
64	25	A3J3-13

J2		TO
10	1	R. FLIP. SW.
20	2	L. FLIP. SW.
	3	KEY
	4	N/U
85	5	KNOCKER
	6	NOTE 1.
31	7	TEST SW. RET.
36	8	COIN LOCKOUT
58	9	N/U
57	10	N/U
56	11	N/U
54	12	N/U
	13	
	14	
	15	

J1		TO
	1	N/U
	2	N/U
	3	N/U
	4	N/U
95	5	OUTHOLE
	6	N/U
	7	KEY
40	8	L. FLIP. COIL
70	9	R. FLIP. COIL

J5		TO
	1	N/U
	2	N/U
	3	N/U
	4	N/U
	5	N/U
	6	KEY
81	7	N/U
18	8	N/U
71	9	LEFT SLINGSHOT
74	10	RIGHT THUMPER BUMPER
78	11	CENTER THUMPER BUMPER
75	12	LEFT THUMPER BUMPER
80	13	UP KICKER COIL
83	14	KICK & DOWN COIL
85	15	RIGHT SLINGSHOT

WIRE COLOR CODE	
1-RED	6-BROWN
2-BLUE	7-ORANGE
3-YELLOW	8-BLACK
4-GREEN	9-GRAY
5-WHITE	0-NO TRACE

ALL DESIGN, OPERATIVE AND PROCESS DATA PERTAINING TO THE ARTICLE SHOWN ON THIS SHEET IS THE PROPERTY OF BALLY MFG. CORP. CHICAGO, ILL. THIS INFORMATION IS DISCLOSED IN CONFIDENCE AND IS NOT TO BE COPIED, REPRODUCED, REVEALED TO OR APPROPRIATED BY OTHERS, IN PART OR IN WHOLE, WITHOUT THE EXPRESS CONSENT OF THE OWNERS. THE PRINT IS LOANED AND MUST NOT BE USED IN ANY MANNER DETRIMENTAL TO THE INTEREST OF THE OWNERS, AND MUST BE RETURNED ON DEMAND.

LET.	CHANGE	DATE	BY	CK.

REMOVE ALL BURRS

TOLERANCES ON DIMENSIONS UNLESS OTHERWISE SPECIFIED
FRACTIONS ± 1/64
DECIMALS ± .005
ANGLES ± 1°

DO NOT SCALE DRAWING

DR. BY E. V. DATE 6-1-79
CK. BY DATE
APP'D BY J D DATE 12-3-79
APP'D BY DATE 12-3-79
FINISH:
HARDENING:

Bally MANUFACTURING CORP.
2640 BELMONT AVENUE
CHICAGO, ILLINOIS
#1157

PRINT CONTROL	PRUD CONT	PUR DEPT	ENG FILE	TOOL DESIGN	COST DEPT	INC INSP	TOOL INSP	MACH INSP		TOTAL	SCALE

NAME: PLUG CONNECTORS
ASSEM. NO. USED ON W
MATERIAL: SILVER BALL MANIA
PART NO. W-1187-17 c

STANPAT PRODUCTS INC. PORT WASHINGTON, N.Y.

TABLE A A1J2

FROM	PIN	WIRE
A2J3-6	1	20
A5J2-14	2	12
A2J3-2	3	50
A2J3-11	4	10
A5J2-23	5	97
A5J2-15	6	23
A5J2-22	7	62
A5J2-8	8	93
A5J2-1	9	60
A5J2-2	10	20
A5J2-11	11	95
A5J2-21	12	47
A5J2-10	13	98
A5J2-7	14	91
A5J2-6	15	85
A5J2-20	16	35
A5J2-16	17	34
A2J3-1	18	40
A2J3-10	19	70
A5J2-13	20	53
A5J2-12	21	61
A5J2-4	22	72
A5J2-3	23	84
	24	

INSERT TO BACK CAB. PLUG

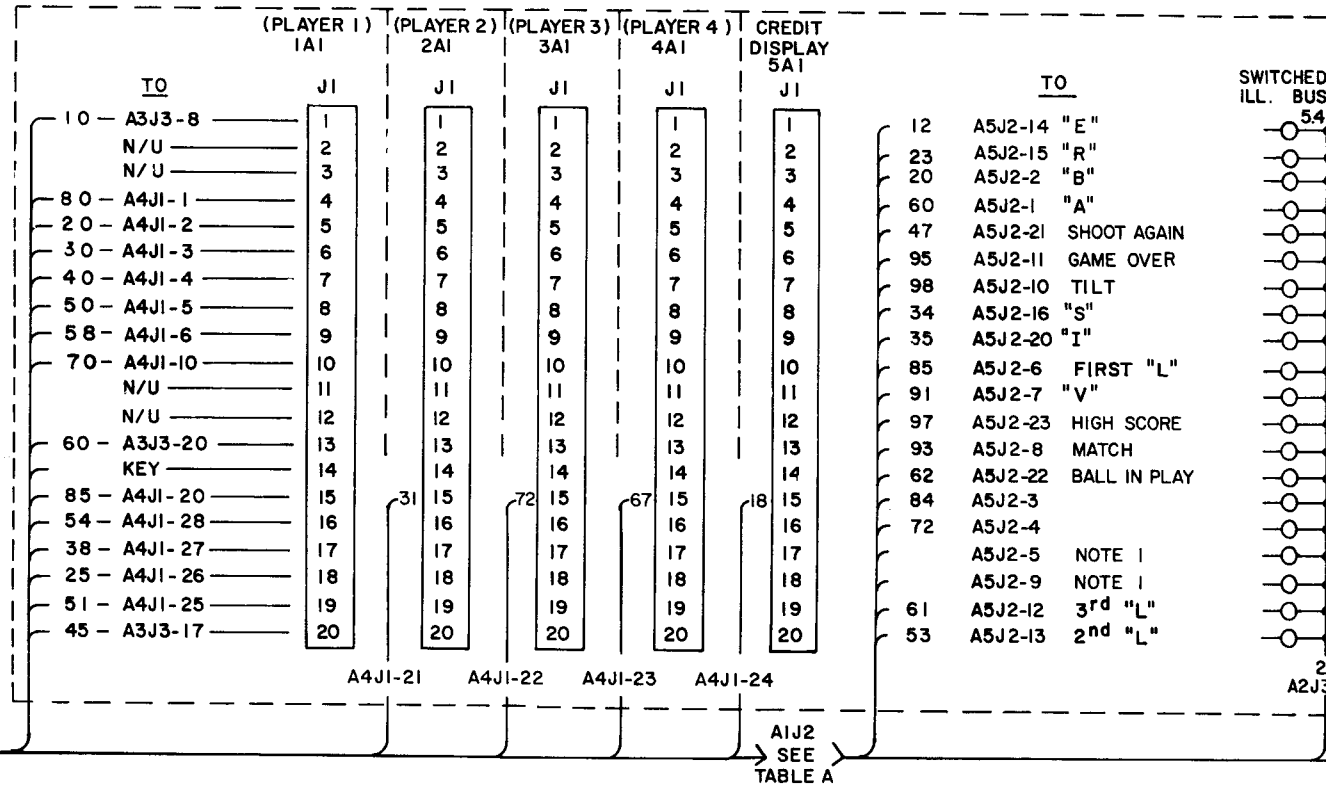

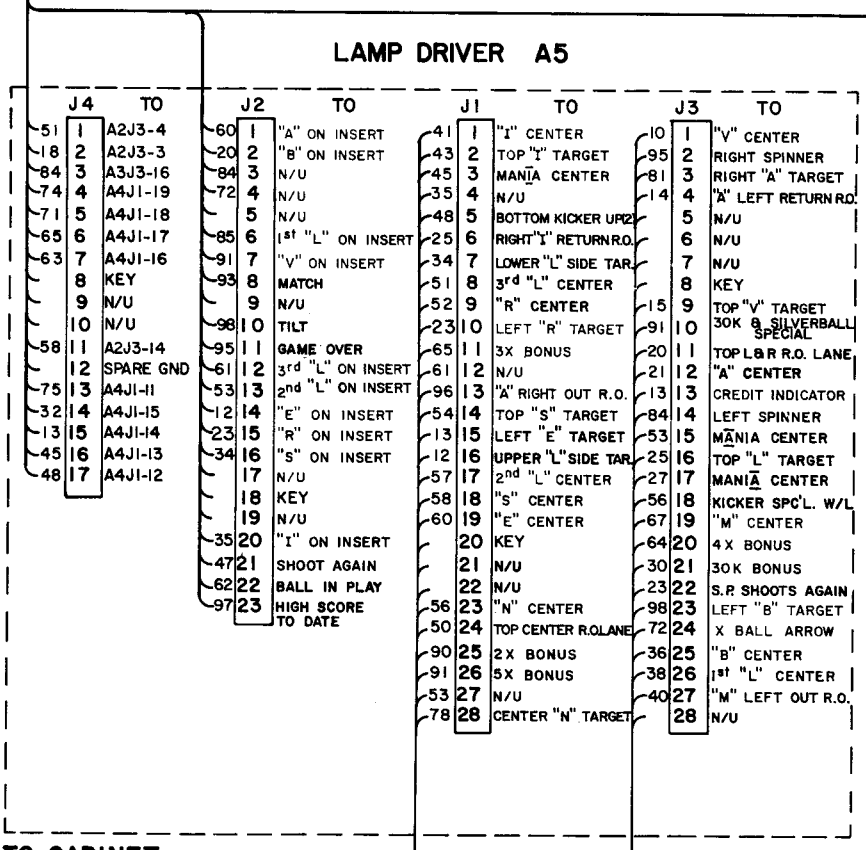

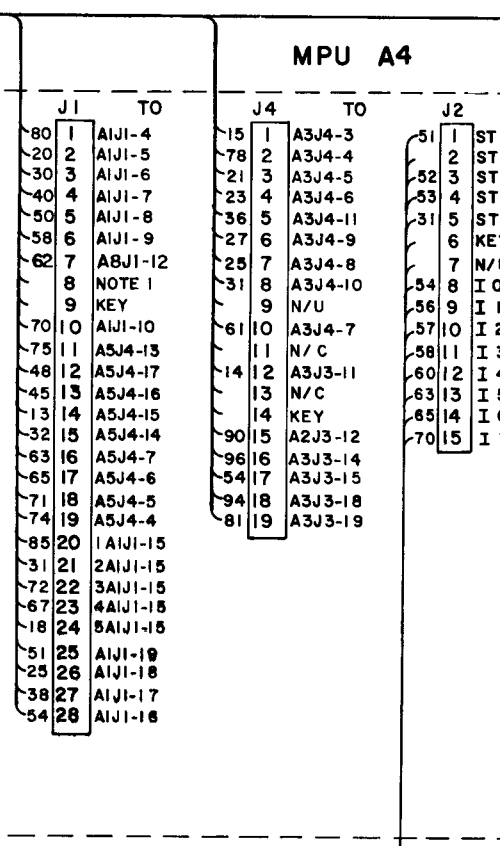

TO CABINET

TO PLAYFIELD

NOTES

1. THESE PINS ARE RESERVED FOR FUTURE USE.
2. WIRE COLORS ARE SHOWN FOR ALL CONNECTOR PINS, SOME WIRES MAY NOT BE USED IN ALL GAMES.
3. * INDICATES AID TEST POINT.

WIRE
1-RED
2-BLU
3-YEL
4-GRE
5-WHI

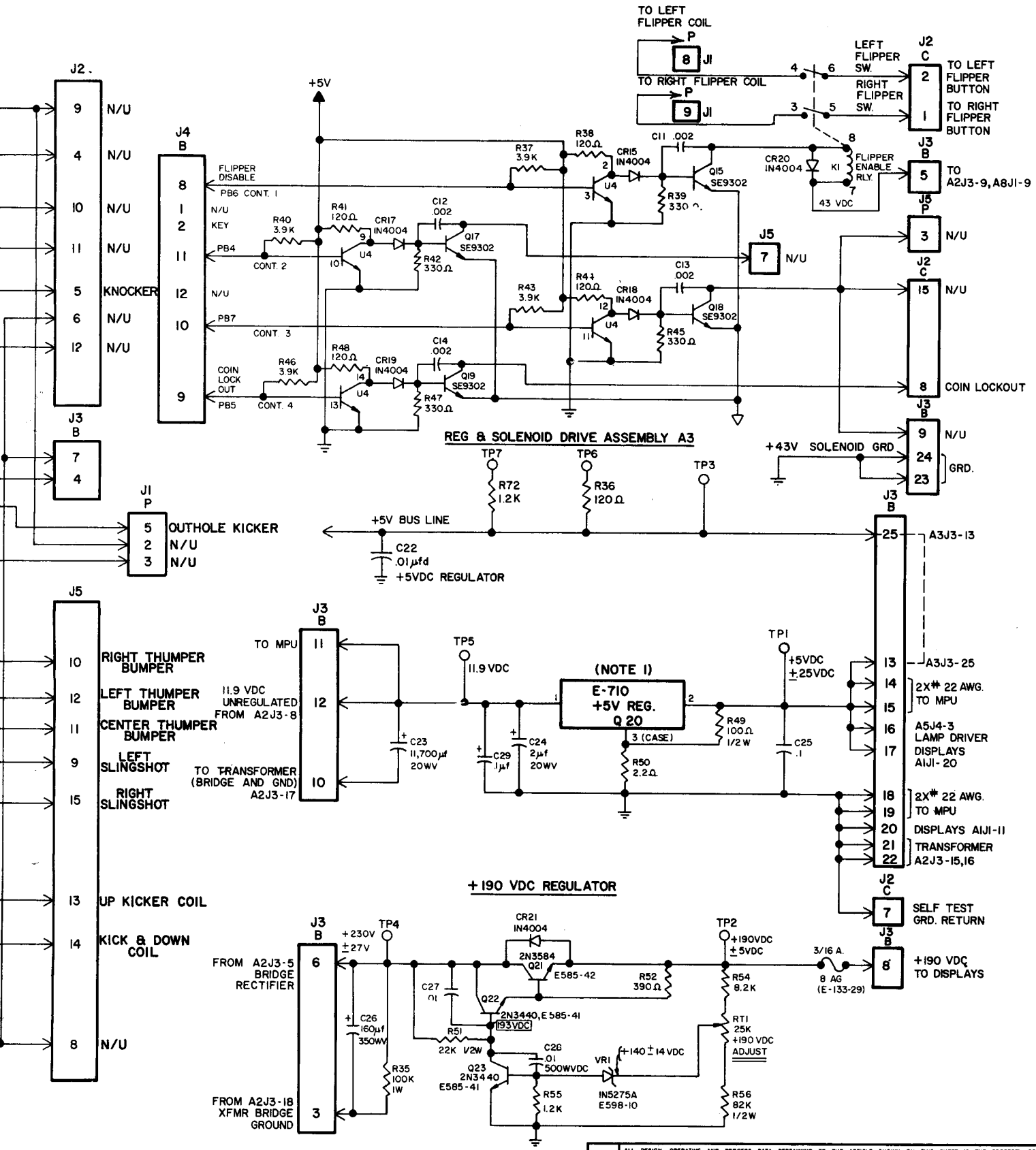

ALL DESIGN, OPERATIVE AND PROCESS DATA PERTAINING TO THE ARTICLE SHOWN ON THIS SHEET IS THE PROPERTY OF BALLY MFG. CORP. CHICAGO, ILL. THIS INFORMATION IS DISCLOSED IN CONFIDENCE AND IS NOT TO BE COPIED, REPRODUCED, REVEALED TO OR APPROPRIATED BY OTHERS, IN PART OR IN WHOLE, WITHOUT THE EXPRESS CONSENT OF THE OWNERS. THE PRINT IS LOANED AND MUST NOT BE USED IN ANY MANNER DETRIMENTAL TO THE INTEREST OF THE OWNERS, AND MUST BE RETURNED ON DEMAND.

NO.	LET.	CHANGE	DATE	BY

REMOVE ALL BURRS
TOLERANCES ON DIMENSIONS UNLESS OTHERWISE SPECIFIED
FRACTIONS ± .008
DECIMALS ± .003
EXCEPT HOLE DIA.'S
ANGLES ± 1/2°
DO NOT SCALE DRAWING

DR. BY	DATE	
CK. BY	DATE	
AP'D BY J.D.	DATE 12-3-79	
AP'D BY	DATE 12-3-79	
FINISH:		
HARDENING:		

Bally MANUFACTURING CORP.
2640 BELMONT AVENUE
CHICAGO, ILLINOIS
#1157

PRINT CONTROL | DIE SIZE- | C.C.- | FT. PER M- | LBS. PER M-

NAME: SOLENOID DRIVER VOLTAGE REGULATOR SCHEMATIC
ASSEM. NO. USED | SCALE

MATERIAL: SILVER BALL MANIA
CODE

PART NO. W-1183-21c

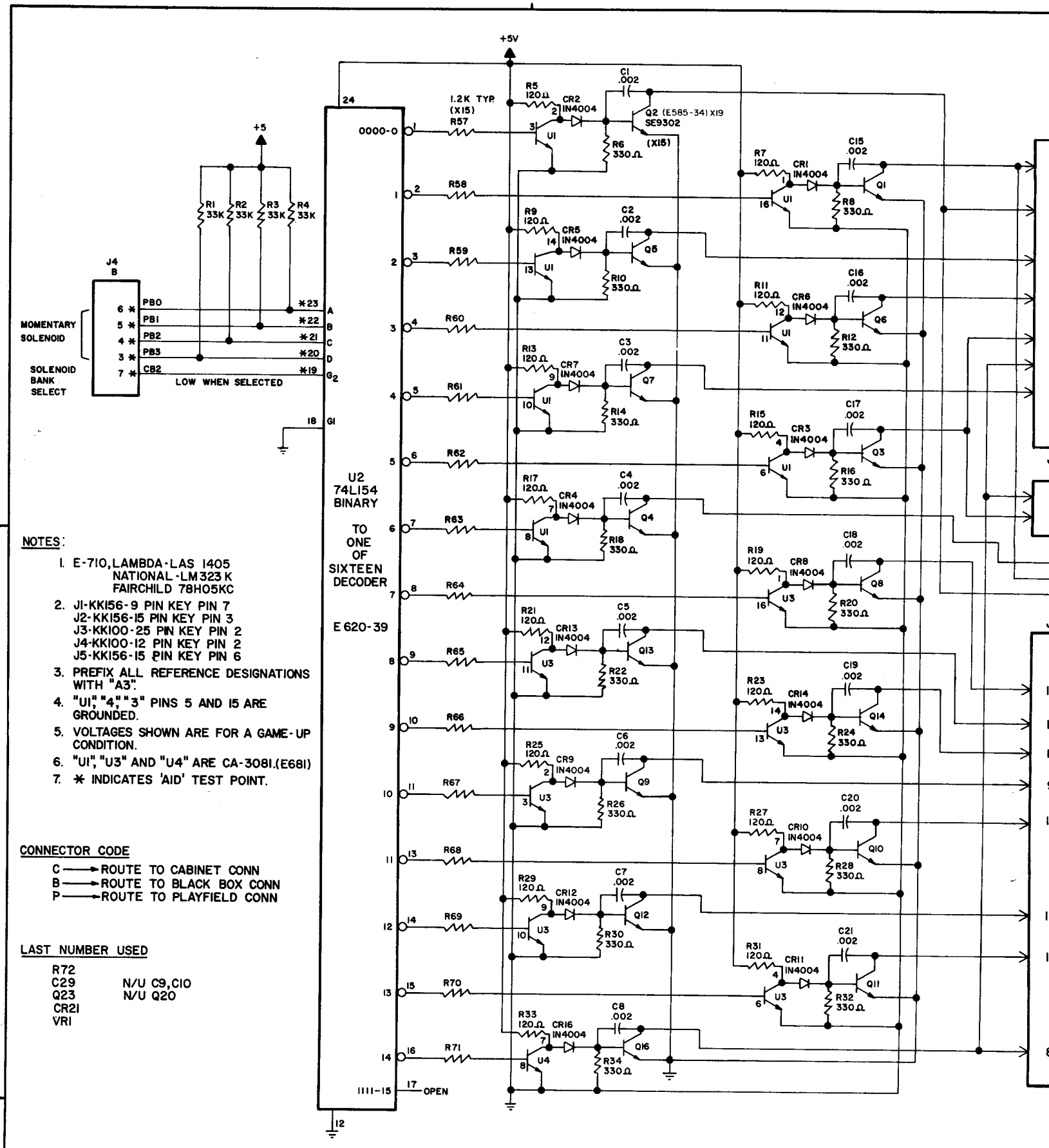

NOTES:

1. E-710, LAMBDA-LAS 1405
   NATIONAL-LM323K
   FAIRCHILD 78H05KC
2. J1-KK156-9 PIN KEY PIN 7
   J2-KK156-15 PIN KEY PIN 3
   J3-KK100-25 PIN KEY PIN 2
   J4-KK100-12 PIN KEY PIN 2
   J5-KK156-15 PIN KEY PIN 6
3. PREFIX ALL REFERENCE DESIGNATIONS WITH "A3".
4. "U1", "4", "3" PINS 5 AND 15 ARE GROUNDED.
5. VOLTAGES SHOWN ARE FOR A GAME-UP CONDITION.
6. "U1", "U3" AND "U4" ARE CA-3081.(E681)
7. * INDICATES 'AID' TEST POINT.

CONNECTOR CODE

C ——→ ROUTE TO CABINET CONN
B ——→ ROUTE TO BLACK BOX CONN
P ——→ ROUTE TO PLAYFIELD CONN

LAST NUMBER USED

R72
C29 N/U C9, C10
Q23 N/U Q20
CR21
VR1

OPER.	DEPT.	DESCRIPTION	TOOL NO.

PLAYFIELD MYLAR PROTECTORS

FO-589

ENCLOSED ARE TWO MYLAR PROTECTORS WHICH MAY BE ATTACHED TO THE PLAYFIELD IN FRONT OF THE SLINGSHOT KICKERS AS SHOWN IN SKETCH. THESE WILL HELP TO PRESERVE PAINT FINISH IN FRONT OF SLINGSHOTS.
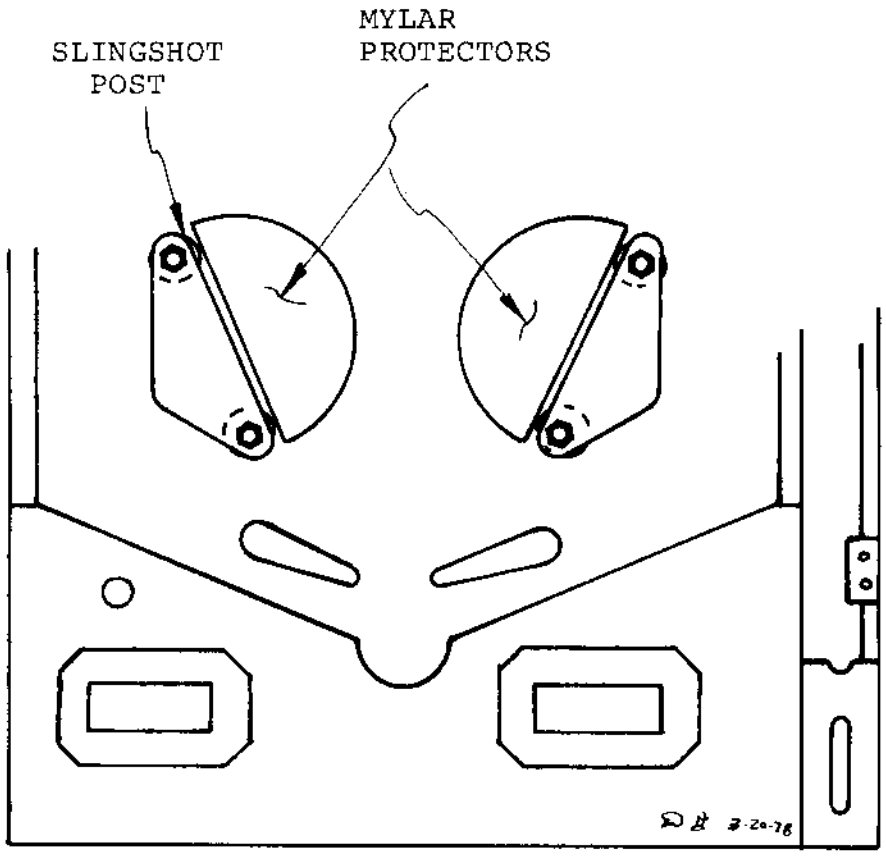
TO APPLY, SIMPLY REMOVE PAPER BACKING AND PLACE MYLAR WITH FLAT EDGE TOUCHING THE TWO SLINGSHOT POSTS.