Xinhao Wang
100909718

Dongfeng Gu
100909719

Team 11

Yannan Xie
100859966

Table of Contents

1. Game Rules

2. Requirements and assumptions

2.1 Functional Requirements
2.2 Non-functional Requirements
2.3 Assumptions

3. Use Case Diagrams & Use Cases

3.1 Use Case Diagram
3.2 Use Cases Descriptions
3.3 Responsibilities
3.4 Unbound Use Case Maps
3.5 Bound Use Case Maps

4.Design Decisions & Pattern Use

4.1 Decisions
4.2 Structural Model

5. Class diagram

6. Sequence diagrams

Section 1

Game Rules

Section 1 Game Rules

Below are scanned pages of the official game rules for Kings and Things. Pages that were irrelevant to the project became omitted.

Each section has been given identifiers to use with requirements traceability, which can be seen as boxes next to the appropriate section. The notation for the identifiers, which will be used later on, begins with GR, followed by an abbreviation for the section (e.g., SU for Setting Up The Game), then a number for the subsection. If necessary, these identifiers will also include a number representing the approximate paragraph line for ease of traceability.

Following is the version of game rules our group used for the project.

THE ORDER OF THINGS

1. EQUIPMENT
- 1.1 The Hex Tiles
- 1.2 The Playing Pieces
- 1.3 The Player Racks

2. SETTING UP THE GAME
- 2.1 The Standard Four-Player Game
- 2.2 Two or Three Players

3. THE SEQUENCE OF PLAY
- 3.1 The First Player
- 3.2 The Turn Sequence Outline

4. WINNING THE GAME
- 4.1 How to Build a Citadel
- 4.2 Winning With a Citadel

5. GOLD AND INCOME
- 5.1 Income
- 5.2 Gold Counters
- 5.3 Treasure Counters
- 5.4 Special Income Counters

6. SPECIAL CHARACTERS
- 6.1 Obtaining a Special Character
- 6.2 Using Gold to Modify the Roll
- 6.3 Special Character Abilities
- 6.4 Discharging Special Characters
- 6.5 When a Special Character Flees

7. RECRUITING THINGS
- 7.1 Free Recruits
- 7.2 Paid Recruits
- 7.3 Trades
- 7.4 Rack Limit
- 7.5 Emptying the Cup

8. HOW TO DEPLOY YOUR RAG-TAG ARMY
- 8.1 Special Characters
- 8.2 Things
- 8.3 Bluff Creatures
- 8.4 Removing Counters from the Board

9. MOVEMENT
- 9.1 Movement Speed
- 9.2 Movement Restrictions
- 9.3 Flying Creatures
- 9.4 Movement Into Enemy or Unexplored Territory

10. EXPLORATION
- 10.1 Determining the Defence
- 10.2 Bribery
- 10.3 Fighting the Defenders
- 10.4 Replenishing the Defenders

11. COMBAT
- 11.1 The Combat Phase
- 11.2 The Player Segment
- 11.3 Battle Rounds
- 11.4 Rolling for Hits
- 11.5 Applying Hits
- 11.6 Retreats
- 11.7 Post Combat
- 11.8 Multiple Combat
- 11.9 Fighting Over Explorations

12. FORTS
- 12.1 Building Forts
- 12.2 Forts and Income
- 12.3 Forts in Battle
- 12.4 Forts Taking Losses

13. SPECIAL CHARACTER ABILITIES

14. RANDOM EVENTS

15. MAGIC

16. TWO AND THREE PLAYERS

★ **PULL-OUT SECTION**
- **Special Characters: Powers and Abilities**
- **Random Events Explanations**
- **Magic Explanations**
- **Summary Charts**

Copyright © 1986 West End Games, Inc.

If any components are damaged or missing please write to: *West End Games, Inc., 251 West 30th Street, New York, NY 10001* if you live in the USA or Canada, or *Games Workshop Ltd, Chewton Street, Hill Top, Eastwood, Notts, NG16 3HY* if you live in the UK, and indicate which components are missing or damaged.

Questions about this game will be answered by West End or Games Workshop if accompanied by a stamped addressed envelope or 2 International Reply Coupons. Questions must be typed or legibly printed. Please format your questions so that they can be answered Yes or No, or with a short reference. Although we welcome comments and suggestions about the game system, we cannot promise to respond to questions on theory or design intent.

CREDITS - West End Games

Design: Tom Wham and Rob Kuntz with Doug Kaufman
Development: Doug Kaufman
Contributing Development: Shelli Ireland and Steve Gilbert
Editing: Bill Slavicsek
Interior Illustrations: Kevin Wilkins, Richard Johnson
Graphics: Loring Eutemey
Cover Illustration: Ray-Mel Cornelius

Playtesting and Advice: Perry Andrus, Gladys Bierce, Ron Bierce, Brian Blume, Jim Burger, Tom Champeny, Neil Christiansen, Dave Conant, Greg Costikyan, Tim Everett, Mike Gray, Ernie Gygax, Elizabeth Hail, Guy Hail, Bruce Heard, Jeff Leason, Russ Lockwood, Paul Miller, Kim Mohan, Paul Murphy, Mike Rothschild, Robert Tuftee, Mike Vogel, James Ward, Max Weissman and Ralph Williams.

WEST END GAMES

CREDITS - Games Workshop

Production: Alan Merrett
Graphic Design: Charles Elliott
Final Editing: Marc Gascoigne

Produced by the Games Workshop Design Studio:
Bryan Ansell, *Managing Director*; Richard Ellard, *Production Manager*; Alan Merrett, *Publications Manager*; Jervis Johnson, *Development Manager*; John Blanche, *Studio Manager*; Charles Elliott, *Graphic Design*; Paul Cockburn, *Commissioning Editor*; Marc Gascoigne, *Editor*; Jim Bambra, Graeme Davis, Rick Priestley, *Authors*; Tony Ackland, Dave Andrews, Colin Dixon, *Artists*; Julie Weaving, Gail Morgan, *Typesetting*; Mark Craven, *Visualising*; Oliver Campbell, Ruth Capon, Susan McLoughlin, David Oliver, Joanne Podowski, Ian Varley, *Finished Art*; Jayni Bacon, *Input*.

GAMES WORKSHOP

INTRODUCTION

Welcome to the strange and silly world of **Kings & Things*** (for the full title please refer to the cover!). It is a world of varied terrains and magical items, of mythical beasts and valiant heroes, of Grand Dukes and Master Thieves.

In **Kings & Things*** you play the role of a minor noble, vying for control of the broken kingdom of Kadab. Opposing you are three other equally minor nobles, all hoping to emerge as the new emperor. To accomplish your divine task you must expand your control of the varied lands of Kadab, increase your income, muster rag-tag armies of whatever creatures are willing to join your cause, recruit powerful heroes to lead them, and build towers, keeps, castles, and finally a citadel to establish your base of power. Sounds easy, doesn't it?

But watch out! Those other players are under the impression that it is *their* divine right. And they have the same chance to recruit armies and even - gasp! - steal away some of your loyal troops, the fiends! If they build a citadel the same turn you do, then you can only win by conquest. That means you have to get your troops marching and capture a second citadel from someone else! Any questions? Good! Read on and all will be explained.

1 EQUIPMENT

Kings & Things* includes:

- ★ 48 hex tiles
- ★ 351 playing pieces
- ★ 8 player racks
- ★ 4 dice
- ★ 1 16-page rule book (including 4-page pull-out)
- ★ 1 game box

(1.1) The Hex Tiles

Historical Note: *Once the lands of Kadab were blessed with really nice weather. We mean* ***really*** *nice. It was so nice that people (and Things) came from all over the world to settle down and soak up the sun. Then an accident destroyed Yazilik University, the empire's centre of magical learning and power. Well, when the old school went boom in the year 250 it released several conflicting fertility spells which changed the climate and complexion of the land. Frozen wastelands are now in close proximity to steaming swamps and vast deserts are adjacent to verdant plains.*

Kings & Things* does not use a regular board. Instead, you build your own board, changing the terrain layout each time you play. (Those fertility spells are fickle and still quite potent.)

The hex tiles represent the seven different types of land (jungle, frozen waste, forest, plains, swamp, mountain, desert) and sea you will encounter and battle over on your way to imperial glory.

JUNGLE

FROZEN WASTE

FOREST

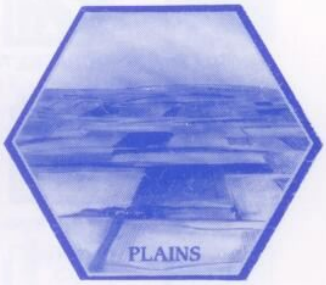

PLAINS

SWAMP

MOUNTAIN

DESERT

SEA

(1.2) The Playing Pieces

Historical Note: *The creatures of Kadab (and even many inanimate objects) have been blessed with at least a rudimentary intelligence since the Big Boom at Yazilik U. As the magic that was released from those hallowed halls settled over the land, it became evident that life wasn't going to be quite the way it was. Things were awarded full rights as citizens by Emporer Nablopal III's Code of Laws and Things (back in the Year 248, before the empire collapsed). So goblins, dinosaurs, flying squirrels, elves, buffalo and even killer penguins all have a say in the politics of the land (even though some still have a little trouble understanding - much less appreciating - the honor).*

One of the ways you gain power is by mustering rag-tag armies of whatever creatures are willing to join your cause (usually in exchange for gold, food and a good time).

The 234 counters wih the blank backs are called *Things*. They represent the fantastic creatures, special income counters, magic items, treasures, gold and random events in the world of **Kings and Things***. The remaining counters - all with variously marked backs - are forts (in four sizes), control markers (used to denote ownership of land hex tiles and Thing stacks), and special characters (the powerful heroes of the world).

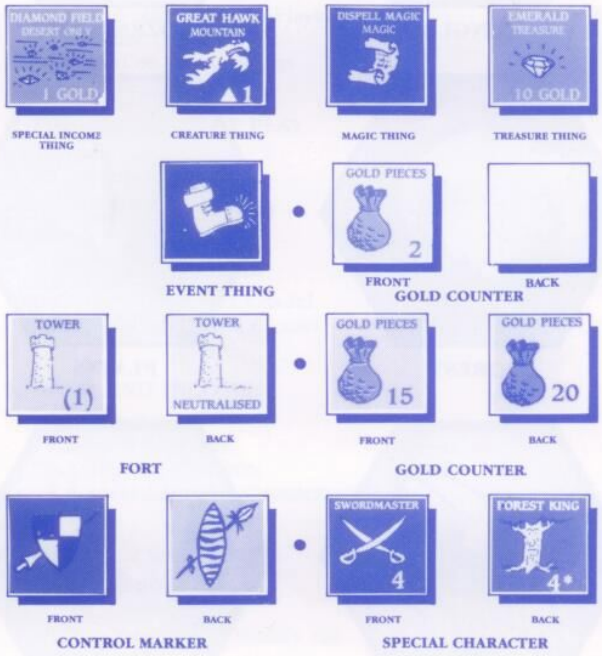

SAMPLE CREATURE COUNTER

FUNNY SYMBOLS USED ON COUNTERS

- ▲ = FLYING CREATURE
- ★ = MAGIC-USING CREATURE
- C = CAN CHARGE IN COMBAT
- R = USES RANGED COMBAT
- ✷ = HAS SPECIAL ABILITY
- (2) = PARENTHESISED COMBAT VALUE; CAN TAKE MORE THAN ONE HIT IN COMBAT

(1.3) The Player Racks

The racks are used to hold Things not currently in use and to keep them secret from the other players. Treasures, events, magic items, special income counters and creatures can all be kept on your nifty thingamajigs. Special characters, gold counters, and forts may *never* be placed on them.

2 SETTING UP THE GAME

(2.1) The Standard Four Player Game

Before you can set out to reunite the shattered kingdom of Kadab (by conquering it yourself, of course), there are a couple of things you should know and do. **Kings & Things*** works best with four players, but if you can't find that many minor nobles, even two or three players will find the game fun and exciting.

There are a number of tasks that need to be done to set up the game. They are:

(2.11) ***The Bank:*** This is where all those important game pieces are kept so they are easily accessible throughout the game. Sort the forts, gold pieces and control markers by type. Set them off to one side of the playing area.

(2.12) ***The Playing Cup:*** This is what you will randomly draw Things from. Place all of the Thing counters in a large cup, bowl, or even the box top (see, every component has an important function). Mix well. Oh, don't forget to punch them out first.

(2.13) ***Special Characters:*** Randomly determine which side of the back-printed special character counters will be used in the game. Some acceptable methods to do this are: (1) toss them from a cup or your hand and see which side they fall on, or (2) roll a die for each counter: 1 - 3 = front, 4 - 6 = back. Set them near the bank.

(2.14) ***Hex Tile Set-up:*** Now it's time to see exactly what the Big Boom is doing to the Kadab terrain this week. Set aside four of the eight sea *hexes* (short for hex tiles). Then shuffle all the land and four remaining sea hexes together face down into a large deck. Now lay out the board according to the diagram in the illustration below. Don't turn the hexes face-up yet.

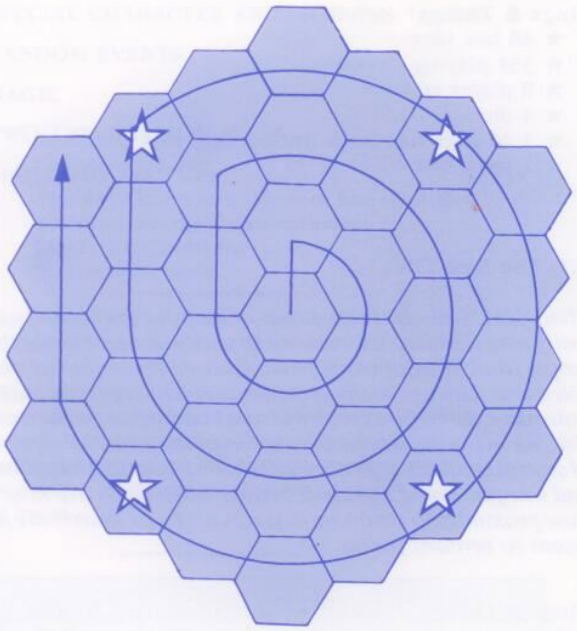

The arrow shows the order in which hexes are laid out.

The four stars indicate the four possible starting points.

GR-SUG-1

(2.15) ***Starting Positions:*** There are four possible places to start your kingdom, as shown in the previous illustration. Each player rolls two dice. The high roller chooses a starting position first (he's now the *first player*), followed by the other players in clockwise order (you may have to shift seats when you're through, so don't get comfortable). The final arrangement of seats, clockwise from the first player, is known as the *player order*. Now you can turn those hexes face-up.

Note: If your starting position is a sea hex or is adjacent to two or more sea hexes, you may remove the sea hex(es) and replace it with a hex drawn from the deck. Repeat this process until your starting position is land with at least two land hexes adjacent to it.

GR-SUG-2

(2.16) ***Starting Kingdoms:*** Each player receives a set of control markers from the bank and places one marker in his starting hex to show that he owns it. Then, in player order, each player selects and marks a second hex. Repeat this procedure one more time so that each player has a kingdom consisting of three hexes. A player's second and third hex *must* be adjacent to at least one of his previous hexes, and may not be adjacent to the hex of another player.

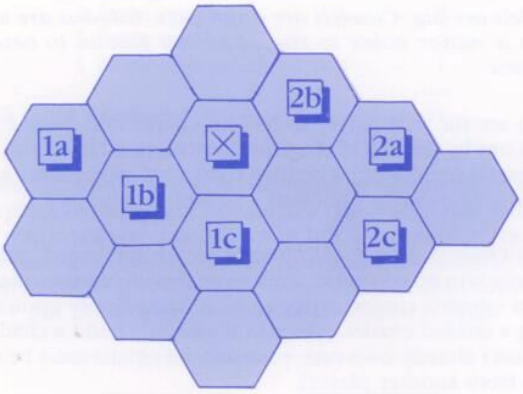

1a = Player 1's starting position
2a = Player 2's starting position
1b = Player 1's next pick
2b = Player 2's next pick
1c = Player 1's last pick (he may not pick ☒ as his last hex; it is adjacent to 2's Kingdom)
2c = Player 2's last pick

GR-SUG-3

(2.17) ***Starting Forces:*** Next, each player takes 10 gold pieces (see **Section 5**) and one tower from the bank, and a rack. In player order, each player takes his tower and puts it in one of his hexes.

Then, again in player order, each player draws 10 Things from the cup (at random - no peeking!). In player order, each minor noble may place some or all of his Things on the board:

GR-SUG-4

★ *Special income counters* include cities, villages, and other counters keyed to specific terrain and printed with gold values. You can place one (and only one) special income counter in each hex you own. Villages and cities can be placed in any of your hexes. Other special income counters can only be placed in hexes of their terrain type.

SPECIAL INCOME COUNTER

Example: The Elephants' Graveyard counter says 'Jungle'. If you have a jungle hex, you may place the graveyard there; if you don't you can't place the graveyard on the board.

★ *Creature counters* include killer racoons, ice worms, and other various critters that populate Kadab. You can place your creature counters in any hexes you own, up to 10 per hex. Place them face down and make neat little stacks in whatever hexes you put them.

CREATURE COUNTER

★ *Magic items and treasures* (along with any other unplayed Things) are placed in your rack.

MAGIC ITEM

TREASURE

GR-SUG-5

(2.18) ***Exchanging Things:*** Next, in player order, players who still have Things on their racks can turn them in for new ones. A player gets to draw one new counter for each counter he returns to the cup. Decide what Things you will return; then draw replacements; then put the returned counters into the cup. If you don't like your replacement counters, tough - you can't replace them again.

Again in player order, anyone who drew replacement counters can place them on the board, according to the rules in **2.17**. The rest are placed on the racks.

(2.19) ***Preparing the Deck:*** Shuffle all the unused terrain hexes together with the four sea hexes set aside earlier. Keep this deck face down and set it near the bank.

(2.2) Two or Three Players

In a two or three player game, the board is smaller; see **Section 16.**

3 THE SEQUENCE OF PLAY

Kings & Things* is played in *turns*; each turn is divided into *phases*.

(3.1) The First Player

During set-up, a player order was determined (see **Section 2.15**). During each phase, the players perform actions in order.

Example: In the Gold Collection Phase, the first player takes gold, then the player to his left does, etc. Once all players have taken gold, the next phase begins.

At the beginning of the *next* turn, the player order shifts. The old second player - the one to the first player's left - becomes the new first player and performs actions first in each phase. At the beginning of each subsequent turn, the player order shifts like this again. (We suggest that you have an official 'changing of the order' at the end of each turn.)

Note: In a two-player game the player order does not change.

(3.2) The Turn Sequence Outline

An abbreviated sequence of play is printed on the back of the central pull-out section of these rules. What follows here is a brief explanation including rule section references.

(3.21) ***Gold Collection Phase:*** Determine income and collect gold pieces from the bank (see **Section 5**). Gold collection is mandatory.

(3.22) ***Recruiting Characters:*** Each player may attempt to recriut one special character (see **Section 6**). Special character recruitment is optional.

(3.23) ***Recruiting Things:*** Each player draws Things from the cup. Players may trade in unwanted Things from their racks. Place Things on the board (see **Section 7**). Thing recruitment is mandatory.

(3.24) ***Random Events Phase:*** Each player may play one Random Event counter from his rack (see **Section 14**). Random event play is optional.

(3.25) ***Movement Phase:*** Each player may move his counters on the board (see **Section 9**). Movement is optional.

(3.26) ***Combat Phase:*** Each player may explore or fight battles (see **Sections 10 and 11**). Combat is optional. Sort of.

(3.27) ***Construction Phase:*** Each player may build forts (**Section 12**). Construction is optional.

(3.28) ***Special Powers Phase:*** During this phase the Master Thief and the Assassin Primus may use their special powers, if they are in the game (see **Special Characters: Powers and Abilities** in the pull-out). Use of special powers is optional.

(3.29) ***Changing Player Order:*** The second player becomes the first player (see **3.1**). Changing player order is mandatory.

4 WINNING THE GAME

The object of **Kings & Things*** is to reunite the kingdom of Kadab under your wise and benevolent rule. Whoever can prove his ability to rule will certainly gain the undying gratitude of the killer penguins and ravaging pixies everywhere and be crowned the new Emperor of Kadab. The proof lies in the ability to build and/or capture the very impressive fortified structures known as citadels.

(4.1) How to Build a Citadel

There are four fort levels. In size order, they are: tower, keep, castle and citadel. Starting with a tower, you will eventually increase the fort in size until you have constructed a citadel (see **Section 12**).

You can only build a citadel during your part of a Construction Phase. You need to already own a castle, have an *income* of 20 (or 15 in a two- or three-player game), and pay 5 gold. See **Section 5**.

BUILDING A CITADEL

Income must be 20 gold (or 15 in 2 or 3 player game)

GR-WG-1

(4.11) You may not build a citadel if you already own one (whether you conquered or built it).

GR-WG-2

(4.12) You don't actually receive income during the Construction Phase, you simply count up your income to see if you're eligible to build a citadel.

GR-WG-3

(4.13) Once built, a citadel can only be lost by conquest. You do not lose it if your income dips below 20 (or 15 in a two- or three-player game).

(4.2) Winning with a Citadel

Citadels are big. Citadels are impressive. Citadels are what allow a minor noble to rise above his fellows to become Emperor.

If you are the first player to build a citadel and no one else builds one by the end of the next Construction Phase, you win - hooray! If someone else builds a citadel before then, the game can only be won by conquest - curses! (see below).

GR-WG-4

(4.21) Once two or more citadels are on the board, players can only win by conquest. This means you need two citadels to win - double curses! A player wins immediately upon capturing a second citadel. (Since you can only build a citadel if you don't already own one, your second citadel must be captured from another player).

GR-WG-5

(4.22) If there is only one citadel on the board and you capture it from its present owner, you must hold it until the end of the Construction Phase of the *next* turn in order to win, just as though you had built it.

GR-WG-6

(4.23) If you build a citadel and then lose it to another player, you may build another citadel (since you can build one if you don't currently own one) as long as you meet the income requirements as usual.

5 GOLD AND INCOME

Gold pieces are nifty things to have. They can be spent to gain special characters, recruit Things, build forts, and bribe defenders during exploration. You get these wonderful, shiny trinkets during each Income Phase. You can also gain gold pieces by playing treasures drawn from the cup or captured during exploration.

(5.1) Income GR-GI-1

Each turn during the Gold Collection Phase, you receive as many gold pieces as your *income*. Income is the net worth of your kingdom, determined by certain things you control (see below). Treasures turned in for gold do *not* count as income.

Income is determined as follows. You receive:
★ one gold piece for each land hex you control, plus
★ as many gold pieces as the combat value of each fort you control, plus
★ as many gold pieces as the printed value of each special income counter you control *on the board* (see below), plus
★ one gold piece for each special character you control.

This Players income is		11
3 Control	=	3
1 Village	=	1
3 from mine	=	3
3 from castle	=	3
1 from special character	=	1
		11

(5.2) Gold Counters

When you gain gold pieces, take gold counters from the bank and place them in front of you. You can't hide your gold from the other players - keep them in full view at all times. Note that some gold counters are backprinted with different values - don't accidentally flip them. ***Important:*** Gold counters are never put in the cup, on your rack or on the board.

GR-GI-2

GOLD COUNTER

(5.3) Treasure Counters

Treasures include such things as pearls, diamonds, and treasure chests. Treasure counters can be drawn from the cup or captured during exploration (see **10**). Place them on your rack and play them when you need additional gold pieces.

To play a treasure counter, display it and take the printed number of gold pieces from the bank. The treasure counter is returned to the cup. A treasure counter may be turned in at any time. ***Important:*** Once taken from the cup or captured during exploration, treasure counters are never placed on the board.

★ Treasure counters are useful because they disguise your true wealth and are harder to lose than gold. However, since you may not have more than 10 counters on your rack (see **7.4**), you may not be able to hold them as long as you wish.

GR-GI-3

TREASURE COUNTER

(5.4) Special Income Counters

There are ten special income counters keyed to specific terrain (see **2.17**). In addition, there are twelve city/village special income counters which can be played in any land hex.

6 SPECIAL CHARACTERS

Special characters are the amazing and adventurous heroes of **Kings & Things***. They're pretty powerful, too. Two different special characters are printed on opposite sides of the same counter, but only one is used at any given time (see the pull-out). Each turn you may try to add one new special character to your army.

GR-SC-1

(6.1) Obtaining a Special Character

How do you go about getting such august personalities as Deerhunter, the Grand Duke and Ice Lord to join your cause and lead your armies?

During the Recruiting Special Characters Phase, choose one unowned face-up special character from near the bank and roll two dice (see the pull-out for a list of the special characters).

Double the character's combat number and compare this number to your die-roll. If you roll *greater than or equal to* the number, you gain the special character. Otherwise he remains unowned unless you spend gold (see **6.2**).

GR-SC-2

(6.2) Using Gold to Modify the Roll

Money talks in this game! Before or after rolling the dice, you can spend gold pieces to modify the die-roll.

★ For every 5 gold pieces spent *before* rolling, you can add one to the roll.
★ For every 10 pieces spent *after* rolling, you add one to the die-roll.

Example: You want to add the Dwarf King (combat value of 5) to your army. You need to roll a 10 (twice 5) on two dice. You spend 10 gold pieces to add 2 to your roll. The dice fall and the result is 7. You add the 2 for the gold spent, making the total 9. You're still 1 short. You can end your phase or spend 10 more gold, adding 1 to get to the King.

(6.3) Special Character Abilities

Many special characters have individual powers, their counters are marked with an asterisk. Swordsman and Marksman also have special abilities and *ought* to have asterisks after their combat values. These are described in the pull-out section of these rules.

(6.4) Discharging Special Characters

Before rolling in the Recruiting Special Characters Phase, you may *discharge* (return to the unowned pool) any or all special characters in your army. This is one way to make other special characters (the ones on the face-down side) available. You may also want to discharge a Terrain Lord to make room for another one in your rag-tag army. (Only one Terrain Lord may serve in your army at any given time). Just flip it over when you return it to the pool.

(6.5) When Special Characters Flee

When a special character is eliminated, he flees back to the pool of unowned special characters next to the bank. He can be recruited by any player, starting with the next Special Character Recruitment Phase. The player who lost the special character may turn the counter over before returning it, making a different hero available.

7 RECRUITING THINGS

During the Recruiting Things Phase, you add new creatures to your army by drawing counters from the cup. There are three ways to acquire new creatures: *free recruits, paid recruits,* and *trade-ins*.

Note: Three methods are used during this phase. Figure your free recruits, paid recruits (a maximum of five), and your trade-ins (a maximum of five) and take them all from the cup at once, remembering to pay your gold and discard traded counters. This ends the phase.

GR-RT-1

(7.1) Free Recruits

You get one free recruit for every two land hexes you control, rounding up (so, for example, you will get two free recruits on the first turn of the game). Simply draw this many counters from the cup.

GR-RT-2

(7.2) Paid Recruits

At the same time, you may pay gold pieces to the bank to buy recruits for your army. For every 5 gold pieces you spend, you may draw one additional counter. No more than 25 gold pieces may be spent to buy recruits in any one turn.

GR-RT-3

(7.3) Trades

Also at this time, you may exchange unused counters from your rack for new recruits and Things. For every *two* counters you return to the cup, you may draw *one* additional counter.

★ Display all counters you wish to trade in. Draw the full number of Things you are allowed for the phase. Then return the traded counters to the cup.
★ You may trade in any unplayed Things on your rack, regardless of type.

Example: Your kingdom consists of five hexes, you have 40 gold pieces, and you have five counters on your rack. You receive three free recruits for your land holdings, you can spend 25 gold pieces for five additional recruits, and you can trade four of the counters on your rack for two additional recruits, making a total of 10.

Note: The Exchanging Things portion of the initial set-up (on a one-for-one basis) can only be done at the start of the game (see **2.18**). After the game has begun, the only time you may trade in Thing counters is during the Recruiting Things Phase (according to the rules above).

GR-RT-4

(7.4) Rack Limit

There is a limit to what your racks can hold. After drawing all recruits and placing creatures on the board (see **Section 8**), you may not have more than 10 counters on your two racks. This limit is always in effect.

Example: If you use the Thief to steal another player's counter when you already have 10 counters on your rack, you must immediately play or discard one counter.

If you are ever discovered to have 11 or more counters on your racks, you must immediately return the excess to the cup. (The player to your right chooses - without looking at your counters - which ones you must return).

(7.5) Emptying the Cup

If the last Thing is drawn from the cup, the special *true elimination* rule is invoked. From that point on, magic items, treasures, and events are **not** returned to the cup when used. Instead, they are set aside and out of play for the rest of the game.

You may not examine the number of counters in the cup prior to announcing how many recruits you wish to buy or trade for.

8 HOW TO DEPLOY YOUR RAG-TAG ARMY

The total force of all your creatures and special characters on the board is known as your *rag-tag army* (don't ask us why - Kadab's a funny place).

(8.1) Special Characters

As soon as you recruit a special character, you must place it in a hex you control. Special characters cannot be placed on your rack and are always played face up. (After all, heroes are too important to be kept out of the action and too brave to languish in hiding).

(8.2) Things

(8.21) ***Magic, Events, and Treasure:*** Once taken from the cup or captured during exploration, magic, event, and treasure counters are never placed on the board. Instead they remain on your rack until you wish to use them (see **Sections 5, 14** and **15**).

(8.22) ***Cities and Villages:*** City and village special income counters may be placed face up in any hex you control which does not already contain another special income counter.

(8.23) ***Other Special Income Counters:*** Other special income counters include Oil Fields, Farmlands, and Diamond Fields, among others. They add wealth to your coffers and increase your level of income. They can only be placed (face up)

in the terrain hex indicated on the counter. Special income counters are *not* affected by the Terrain Lords (see **Section 6** and the pull-out).

Example: Oil fields may only be placed in a frozen waste hex, farmland in plains, and diamond fields in deserts. Having the Ice Lord will **not** allow you to place the oil fields in the mountains.

The FARMLANDS counter is played correctly, in Plains. The Elephant's Graveyard may never be played in mountain, despite the presence of the Jungle Lord.

(8.24) ***Creatures:*** *Each creature in the land of Kadab has certain basic needs - special food, letters from home, the knowledge that it is fighting for home and thinglings - things which only the right terrain or a Lord who understands the creature can give. That's why you must own a hex of the right terrain or have the right Lord to use a creature properly. Oh, you can recruit a creature without this, but it will pine for its own homeland, and its allegiance will be fragile indeed.*

Creatures may be played *face down* in any hex you control. A creature is a *bluff* if you don't own a hex of its terrain type, and is real otherwise.

To survive and be real, a creature needs *support*. Support is the basic stuff that every creature must have to thrive, lead meaningful lives, and build strong bodies eight ways. Creatures can be supported two ways: by hexes, and by Terrain Lords.

A hex supports all creatures of its terrain type, anywhere in your kingdom. So, for example, if you own a swamp hex, all of your swamp creatures are supported, wherever they may be.

Terrain Lords are special characters (see **6** and the pull-out). Each is printed with the name of the terrain type. If you have a Terrain Lord, any creatures of his terrain *in the same hex* as he is are supported. For example, if you had the Swamp Lord, any swamp creatures in his hex would be supported - but swamp creatures elsewhere would *not*.

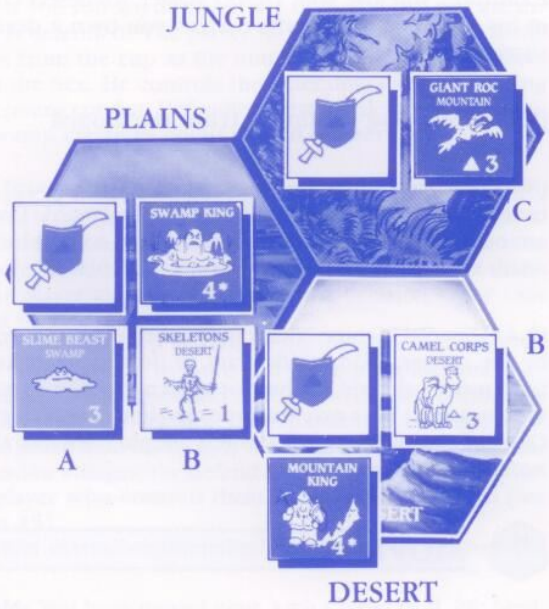

Counter "A" (the slime beast) *is* a supported counter, because it is in the same hex as the Swamp King. (The Swamp King does not require support.) Both counters marked "B" (the Skeleton and the Camel Corps) are supported, because the player owns at least one hex of their type. Only counter "C" is a bluff, as the player owns no mountains, and the Mountain King is in the wrong hex.

(8.3) Bluff Creatures

Bluff creatures (those creatures which aren't supported by a terrain hex of their type or the appropriate Terrain Lord), can move, explore, initiate combat, and so on, just like supported creatures. A bluff creature remains in play *until it is flipped face up*. (This usually happens when combat is about to begin.) At the instant this happens, any of the other players can demand its removal.

But if no one notices that the creature is a bluff it stays in play and can still fight. When someone finally notices that it's a bluff, it is removed - unless it has already been flipped face down.

If you have a bluff creature on the board and acquire a hex of its terrain type (or the right Terrain Lord), it's no longer a bluff - it is now supported, and isn't removed if flipped face up. Conversely, supported creatures can become bluffs if you lose a hex or Terrain Lord.

Example: One stack of counters in your army is made up of dervishes, nomads and old dragons - all desert creatures. You don't own a desert hex or the Desert Master, so they are all bluffs. If you capture a desert hex during the first battle of a Combat Phase, the creatures are supported for all subsequent battles.

Example: During a battle you lose your last desert hex. All of your desert creatures are now bluffs.

Example: You lose your Desert Master. All desert creatures in his stack are now bluffs (unless you own a desert hex somewhere).

(8.4) Removing Counters from the Board

(8.41) Creatures may *never* be taken off the board voluntarily. Once played, they remain on the board. Creatures are only removed if they are discovered to be bluffs, as a result of combat, or due to random events.

(8.42) Special income counters *may* be voluntarily removed by the owner. (You might want to do this to make room for a more valuable counter or to deny resources to an invading army.) This may be done anytime *except* during the Combat Phase. Removed counters are put back into the cup, *not* back onto your rack.

9 MOVEMENT

This is the way creatures get from place to place in **Kings & Things***. During the Movement Phase, all creature and special character counters in your army may move. Forts, special income counters, and control markers (except those marking your army stacks) never move.

GR-M-1

(9.1) Movement Speed

GR-M-2

Each creature and special character in your army may move up to four hexes each turn.

(9.11) Each swamp, mountain, forest and jungle hex counts as two hexes when moving. All other hexes count as one hex.

Example: A creature can move through two '2' hexes, one '2' hex and two normal hexes, or four normal hexes in a turn.

(9.12) Don't count the hex where your creature starts when moving, but do count the hex in which it ends its move.

(9.13) Creatures may move individually or in stacks, dropping off and picking up counters anywhere along their movement range.

(9.2) Movement Restrictions

(9.21) You may only move your counters during your part of the Movement Phase (***exception:*** retreats, see **11.6**).

GR-M-3

(9.22) No more than 10 of your creatures can end movement in the same hex. Control markers, special income counters, and forts do *not* count towards this limit. Special characters do.

★ This restriction doesn't limit a hex to 10 creatures. It limits it to 10 *friendly* creatures. There could be four stacks of 10 creatures in a single hex, each controlled by a different player.

★ This restriction does not apply to a citadel hex. You can attack or defend a citadel with any number of creatures and special characters.

GR-M-4

(9.23) If your creatures begin a Movement Phase in the same hex as enemy counters (all other players are considered your enemy), they are *pinned*, and may not leave the hex. Also, your creatures must stop moving as soon as they enter a hex occupied by face-down enemy counters, or by face-up enemy counters which have a *combat value*. A combat value is the number Things need to roll to inflict hits upon the enemy. It is the number located in the lower right-hand corner of the counters. Special income counters (other than cities and villages) don't have a combat value and do not participate in combat.

★ Your armies cannot be pinned by bluffs. At the beginning of your move, you may ask the player whose counters are pinning you to reveal at least one supported creature. If he refuses (or can't), your army may move normally.
★ Bluffs *can* force your creatures to stop moving.

(9.24) Each counter or stack of counters must finish moving before any other counter or stack may move.

GR-M-5

(9.25) Only flying creatures may move onto a sea hex, and they are not allowed to end their movement on one. If, for any reason, a creature or stack of creatures ends its move on a sea hex, they are immediately returned to the cup. (Exception: see magic explanations the Balloon and the Fan, in the pull-out).

(9.3) Flying Creatures

*Not all creatures in **Kings & Things*** are land-bound. While walking may be a fine way for walruses, elves and the Marksman to get around, vampire bats, pixies and Ghaog II will stick to the skies, thank you!*

GR-M-6

Flying creatures can fly over enemy-occupied hexes. These creatures are marked with the ▲ symbol.

GR-M-7

(9.31) When a stack of creatures moves into, or wishes to leave, a hex that contains face down enemy counters or face up enemy counters with a combat value, your flying creatures may continue moving, *provided there are no enemy flying creatures in the hex.*

★ You must reveal all flying creatures you wish to continue moving (bluff creatures could be removed if discovered at this time).
★ The enemy player has the option of revealing any or all of his flying creatures in the hex (bluffs could be removed).
★ You must leave behind as many of your flying creatures as the number of flying creatures your enemy reveals. Others may continue on their way. This procedure must be repeated for each enemy-occupied hex your flyers enter.
★ You may not enter or pass through a hex that contains the maximum number of friendly creatures because the moment you enter the hex to fly through, the limit of 10 is exceeded.

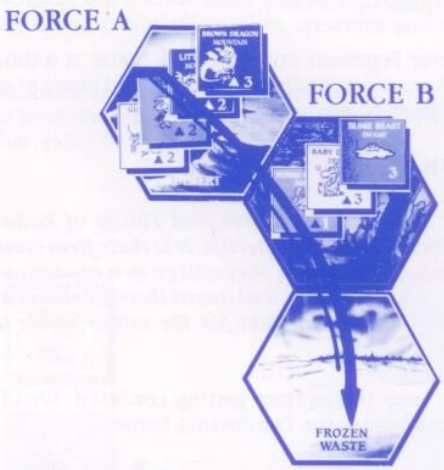

Player A's force of 4 flying creatures enters B's hex. A announces (and reveals) his four flyers and states he wishes to continue movement. B chooses to reveal both (he could have chosen to reveal one or none) of his flying creatures.

2 of A's flyers must remain in the forest hex, but the other two may continue onto the frozen waste hex.

GR-M-8

(9.4) Movement into Enemy or Unexplored Territory

GR-M-9

Important: Whenever a stack of your creatures enters enemy or unexplored territory, mark it by placing one of your control markers on *top* of the stack.

GR-M-10

(9.41) Remember that enemy controlled hexes do not halt your army's movement. Only enemy units *with combat values* do (creatures, special characters, forts, cities, or villages).

GR-M-11

(9.42) Counters that move into *unexplored territory* (unowned hexes, see **10**) must stop moving.

GR-M-12

(9.43) You can conquer any *enemy* hex without a battle if any of your counters end the Movement Phase there and the hex contains no enemy counters with combat values. Just replace the control marker with one of your own.

10 EXPLORATION

Who knows what vile monsters lurk in the wilds of Kadab? Or what treasures there are to be discovered? What magic items to be found? There's only one way to find the answers to these all-important questions. Send your rag-tag army out to explore!

When one of your armies enters an uncontrolled hex, it must end movement there. During the Combat Phase it explores the hex and finds out what strange and wonderful (and possibly dangerous) things it has encountered. It is possible to conquer a hex without a fight, but you could meet creatures you have to bribe or battle.

GR-E-1

(10.1) Determining the Defence

(10.11) When you explore a hex, roll one die. If you roll a 1 or 6, the hex is undefended and captured without a fight. Place a control marker (the one on top of your stack will do nicely) to show that the hex is now part of your growing kingdom. Counters used to explore an undefended hex are *not* flipped over - so bluff creatures can be used for exploration.

(10.12) If you roll anything but a 1 or 6, the hex you are exploring *is* defended. The player to your right draws as many counters from the cup as the number you rolled and places them in the hex. He controls the defending creatures during the up-coming combat. Defending creatures do not require support; swamp creatures could defend a desert hex.

★ If a special income counter is drawn, it is returned to the cup unless it is keyed to the hex terrain, or is a city or a village.
★ If more than one playable special income counter is drawn, the counter(s) with the lowest income value is returned to the cup. The player to your right makes the decision in the case of equal values.
★ If a treasure is drawn and the exploring player captures the hex, he may take the treasure and place it on his rack.
★ If a magic item is drawn and there are no defending creatures with combat value in the hex, the explorer may take the magic item and place it on his rack. If there are defending creatures, cities, and/or villages, the defending forces may, at the option of the player who controls them, use the magic item(s) (see **Section 15**).
★ Random events are immediately returned to the cup.

Example: You have moved your Arch Cleric, troll, elk herd, and witch doctor into an unexplored swamp hex. You roll a five and the player to your right (who will serve as the defender) draws that many things from the cup. The draw includes an oil field special income counter, a diamond treasure counter, the magic sword, a white dragon, and a giant ape. The oil field is not keyed to the swamp, so it is immediately returned to the cup and the defender decides to let the ape use the sword. Next you may try to *bribe* (see **10.2**) the defenders or go on with the battle.

(10.2) Bribery

You may *bribe* defending creatures.

(10.21) You may bribe a defending creature, city or village by paying as many gold pieces as its combat value. Bribed creatures return to the cup without putting up a fight. A bribed city or village is 'neutralized' (see **Section 11**). You may, if you wish, bribe some but not all of the hex's defenders.

Important: If the defending force contains treasure, magic and/or special income counters, then the cost to bribe *any* counter in the force is *doubled*.

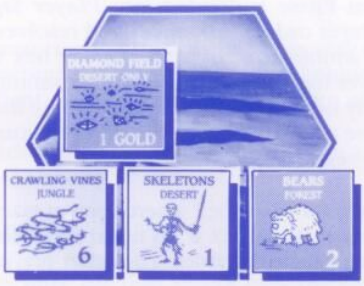

This player rolled a "4" for his exploration, and the player to his right drew the following force. The exploring player could bribe this entire force for 18 gold pieces, or, for instance, just pay 4 gold pieces to bribe the Bears. Costs are doubled because of the active special income counter.

(10.22) If you bribe all creatures, cities and villages in the hex, you get any treasure and unused magic items they were guarding.

(10.3) Fighting the Defenders

If there are still defenders in the hex, combat is resolved (see **Section 11**). All attacking creatures (yours, silly) are turned face-up, and bluff creatures are removed if noticed.

If you retreat from combat, surviving defenders remain face-up in the hex, ready to fight the next minor noble who comes along. Once the defenders have fought for at least one combat round, they cannot be bribed, even if a different players army attacks. They may never retreat, and will instead fight to the last... um... man.

(10.4) Replenishing Defenders

If you attempt to explore a hex already occupied by defenders (ie, some other player tried to conquer the hex and failed) you must fight those defenders. You may not bribe them, and no die is rolled as in **10.1**.

If both the defending and attacking forces are eliminated in combat, the hex remains unexplored. Any player who later explores the hex must roll for defenders as described in **10.1**.

11 COMBAT

The player who finally emerges as Emperor of the lands of ***Kings & Things**** *is more than just brilliant, well loved, and devoted to the good things in life. The victorious minor noble also has a strong army of creatures at his side, willing to battle to the end to uphold Truth, Justice, and a Good Time. Where better to prove such ideals than on the field of combat?*

When counters of more than one player come together in a hex, a battle must be fought to determine ownership of the hex. Each battle is resolved in a series of *rounds*, and continues until all but one side has been vanquished or retreats.

(11.1) The Combat Phase

GR-C-1

All battles are resolved during the Combat Phase - including ones triggered by exploration.

(11.2) The Player Segment

GR-C-2

Each Combat Phase is divided into *Player Segments*. Each player (in player order) announces and resolves any *one* battle. He may announce a battle in any one hex where he and another player have counters, or he may announce that he is exploring any one unexplored hex where he has counters. In the latter case any battle with defending creatures is resolved in the same segment.

(11.21) The owner of the hex where combat takes place is called the *defender*. If the hex is an unexplored one, the defensive creatures are the defender. The other player(s) are called *attackers*.

(11.22) If you have no battles to resolve or hexes to explore, your segment is skipped.

GR-C-3

(11.23) If your units are involved in more than one battle or exploration, you may only resolve one per Player Segment.

(11.24) You must resolve one battle or exploration during each Player Segment that you are eligible to do so. You may not voluntarily pass.

GR-C-4

(11.25) Player Segments continue, one battle at a time, until all players have run out of battles to fight and hexes to explore. Then the phase is over (phew!).

(11.3) Battle Rounds

Historical Note: *The creatures and Things of Kadab have an interesting view of the afterlife. It is their firm conviction that if eliminated in battle, they will go to a mysterious place called The Cup. There they will await their glorious call back to Kadab to once again fight for the minor noble of their choice.*

In order to keep things from getting confused, we offer the following guidelines for conducting battle.

★ When a battle begins, take the counters involved from their hex and place them off to the side of the board. Place a battle marker in the contested hex.
★ In battle creatures use magic, missile and melee to attack the opposing forces. In **Kings & Things*** there is no bloodshed - all defeated creatures wander back to the cup, to be called into service again during the Recruitment Phase. Such creatures are called 'eliminated'.

(11.31) Battles are fought in a series of rounds, each of which consists of the following steps:

1) Magic: You and your opponent(s) roll for all creatures printed with the ★ symbol.

2) Ranged: You and your opponent(s) roll for all creatures with the **R** symbol.

3) Melee: You and your opponent(s) roll for all other creatures.

4) Retreat: First the attacker and then the defender has the opportunity to withdraw from the hex, ending the battle. If both attacker and defender decide to stay, go back to the first step. Otherwise, read below. (For multiple combat, see **11.8**.)

5) Post-Combat: The player who wins the battle makes sure his control marker is in the hex, then checks to determine whether forts and special income counters are damaged or lost (see **11.72**).

(11.4) Rolling for Hits

GR-C-5

In each of the three combat steps (Magic, Ranged and Melee), different types of creatures roll dice to inflict hits on the enemy army. The basic procedure is the same for each type.

GR-C-6

(11.41) You roll one die for each creature *except* those with a **C** printed on their counters. **C** signifies a Charging creature which uses two dice. If the number rolled for a creature is *equal to or less than* its combat value, one hit is inflicted on the enemy army. **C** creatures can inflict two hits, since they roll two dice.

Example: Your walrus and white knight meet a mountain man and a nomad on the field of battle. You roll one die for the walrus, two dice for the knight (a **C** creature). You need to roll less than or equal to 4 for the walrus (that's it's combat value) and 3 for the knight. The knight gets two die rolls. If the knight rolls 3 or less on each die, he inflicts two hits on the enemy.

Note: A few creatures have combat values of six. These hit automatically, but the die must still be rolled. (The Talisman or Black Cloud could affect these creatures and their rolls).

★ Forts, cities and villages have combat values equal to their *current* level (For example, a city which has taken one hit has a combat value of 1). See **Section 12**.

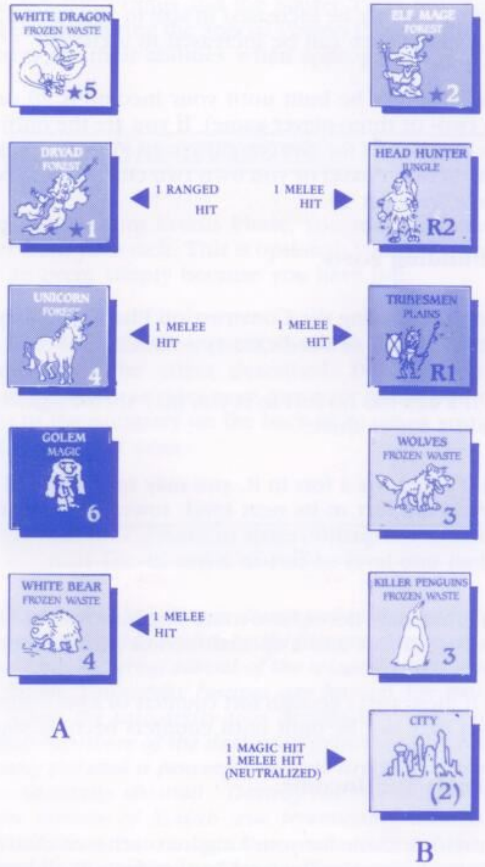

Player A rolls a 3 and a 2 in the magic step, Player B rolls a 4. Player A scores one hit, which Player B takes from the City.

Player B rolls a 4 and a 1 in the ranged step, for one hit. Player A removes the ★1 creature.

In melee, Player A rolls a 4, 4, 4, scoring 3 hits. Player B rolls a 2, 2, 2, scoring only 2 hits (the city was reduced to a combat value of 1). Losses are taken as shown. Player A retreats.

GR-C-7

(11.5) Applying Hits

During a Combat Step, you and your opponent roll for all creatures which can fight in that step, *before* either side suffers any losses. After losses are applied the next step begins.

Example: During the Magic Combat Step, all of your magic creatures roll, and so do your opponents. If hits are inflicted, they are applied after all magic creature die-rolls, but before moving to the Ranged Combat Step. If you choose to apply a hit to a ranged creature it is returned to the cup and won't get to fight in the Ranged Step.

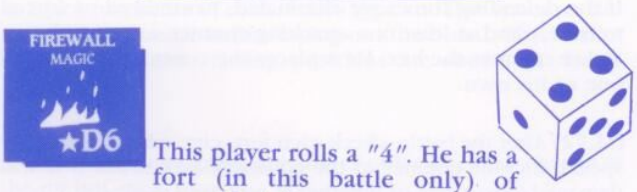

This player rolls a "4". He has a fort (in this battle only) of strength ★4.

(11.51) After the number of hits your forces suffer has been determined, you decide which of your counters are damaged or removed.

GR-C-8

(11.52) If a creature or special character (except the Sword Master, see the pull-out) takes a hit it is eliminated. A fort, village or city can take as many hits as its combat value. If it takes that many it is neutralized. If it takes fewer hits, mark the counter with a gold piece or a die showing the number of hits it has taken.

(11.53) When a counter is neutralized, flip it over. It is not destroyed, but it can no longer participate in the battle.

★ Forts, villages and cities which take fewer hits than their combat value continue to fight, but at their reduced strength. Castles and citadels do not lose their **R** and ★ status.
★ See **Section 12** for more details about forts in combat.

GR-C-9

(11.6) Retreats

Is the fight going badly? Did the hex you decided to liberate from your opponent contain one surprise too many? Well, discretion is the better part of violence, or something like that.

At the end of each combat round, the *attacker* (the player who doesn't own the hex) has the option to retreat, ending the battle. If the attacker decides to stay and fight, then the defender (the owner of the hex) has the option to retreat.

GR-C-10

To retreat, move your counters to an adjacent hex you control which is not currently occupied by enemy counters. If no such hex exists, your force may not retreat; it must stay and fight.

When a force retreats, all friendly creatures and special characters in the battle hex must retreat together into the same hex. If that hex then contains more than 10 friendly creatures, the excess are removed (see **9.2**).

If there are more than two players involved in the same battle, see **11.8**.

Note: Only creatures and special characters may retreat; forts and special income counters must be left behind. They may continue to fight alone if they have not been neutralized.

★ The defenders of a previously unexplored hex may not retreat.

(11.7) Post-Combat

What happens once the dust settles over the battlefield and the combat is decided? Well, after all but one side has been eliminated or forced to retreat, ownership of the hex and the status of the forts, cities, villages, and other special income counters must be determined.

(11.71) If all attacking counters are eliminated or forced to retreat, the hex remains the property of the defender, even if all defending counters were eliminated or neutralized.

If the defending forces are eliminated, neutralized or forced to retreat and at least one attacking counter remains, the attacker captures the hex. He replaces the control marker with one of his own.

GR-C-11

(11.72) After the battle, check each fort, city, village, and other special income counter in the contested hex to see if it was damaged (regardless of whether it was used to absorb hits or even if no hits were inflicted in the battle). Roll one die for each counter. On a roll of 2 through 5 there is no damage. On a roll of 1 or 6, the city, village or special income counter is destroyed (return it to the cup) or the fort is reduced one level (castle to keep, keep to tower, tower eliminated).

Important: Citadels are never reduced or destroyed.

(11.73) The reduction in value suffered by a special income counter or fort in the course of a battle lasts only as long as the battle (unless you roll a 1 or a 6; see **Section 11.72**); once the battle is over, flip all surviving neutralized counters back over and remove any gold pieces or dice you used to indicate hits.

GR-C-12

(11.74) After you capture a hex, you may immediately place any counters from your rack on that hex (see **Section 8**).

(11.8) Multiple Combat

It is possible for the armies of more than two minor nobles to fight over the same hex. Talk about lots of fun. Multiple combat involves two or more players forces coming together in another player's hex.

GR-C-13

(11.81) During each *round* (not step) of such a battle, each player must declare which *one* player he will try to inflict his hits on. Each player must fight someone in every round.

★ A player may change the target of his combat each round, but not while a round is in progress. If you fight Minor Noble C in your Magic Combat Step, you must continue fighting him until your next Magic Combat Step. Then you can declare another target. Declarations should be made simultaneously (or written down).

(11.82) Players may retreat individually, leaving the others to continue the battle (though this may illicit jeers from the other players). The attacking player to the left of the defender has first option to retreat, followed by each other attacker in player order. Then the defender may elect to retreat. The battle continues until only one player is left alone in the hex.

(11.9) Fighting Over Explorations

What?! Your force of killer puffins and flying squirrels has entered a hex to explore it for your kingdom and - horrors! - they've run into Minor Noble D's army of dwarves and mountain men! This presents a problem. Read on.

If two or more competing armies occupy the same unowned hex, a battle ensues. It must be fully resolved before the sole remaining army may explore the hex. If all creatures are eliminated in the combat there is no exploration. When only one army remains in the hex, roll for defenders and conduct exploration as usual.

(11.91) In the case of multiple players fighting over the same unowned hex, the attacker is considered to be the player who *initiates* the combat.

(11.92) The defender in multiple combat over an unowned hex is the player to the right of the attacker. If he has no counters in the hex, then the next player to the right is the defender.

12 FORTS

Towers, keeps, castles and *citadels* are collectively called *forts*. Unlike most other counters, forts are not drawn from the cup. They are instead built during a Construction Phase. A tower is the smallest level of fort and is the first piece you can build. It can subsequently be increased in size to a keep and then a castle. A castle then can be increased to a citadel.

GR-F-1

A citadel may not be built until your income is 20 or more (15 in a two- or three-player game). If you are the only minor noble with a citadel for one complete turn (Construction Phase to Construction Phase) or you own two citadels, you win the game (see **Section 4**).

GR-F-2

(12.1) Building Forts

Forts are built during the Construction Phase. You may build forts in any or all of the hexes you own.

GR-F-3

(12.11) If a hex has no fort in it you may spend 5 gold pieces and build a tower there.

GR-F-4

(12.12) If a hex has a fort in it, you may spend 5 gold pieces to upgrade the fort to its next level: tower to keep, keep to castle, and (if you qualify) castle to citadel. You may never build more than one level of fort in a hex in one turn.

(12.13) A hex may never have more than one fort in it. It can contain both a fort and a special income counter, though.

(12.14) If there aren't enough fort counters of a particular level, that level may not be built until counters become available.

(12.2) Forts and Income

GR-F-5

Forts provide income for your kingdom each turn. You receive as many gold pieces as the total level of forts in all hexes you control. You may never *sell* forts.

GR-F-6

(12.3) Forts In Battle

Yes, your forts can help your army of dinosaurs, buffalo, and elephants in battle!

A fort's level is also its combat value. Forts roll to inflict hits as though they were creatures (and with all that magic floating around, they just might be!).

★ Towers and keeps have combat values of 1 and 2 respectively. Castles have a ranged combat value of 3 (notice the **R** on the counter); citadels have a magic combat value of 4 (see **Section 11**). Even if a castle or citadel takes hits, it still attacks as an **R** or ★ unit, regardless of its current combat value.

(12.4) Forts Taking Losses

Forts, like cities and villages, have parenthesized combat values (that means they're in brackets). This indicates that they can take multiple hits instead of being eliminated by a single hit the way creatures are.

13 SPECIAL CHARACTER ABILITIES

GR-SCA-1

Some special characters are useful because they have the same sorts of abilities as creatures, only more so. Others have special powers. These special powers are described in the pull-out section (have you pulled it out yet? - no? well go and do it then!). A summary of these powers is printed on the back of the pull-out as well.

★ The Assassin Primus and the Master Thief only use their special powers during the Special Powers Phase. Other special characters use their abilities when appropriate.

14 RANDOM EVENTS

GR-RE-1

During the Random Events Phase, you may play one event counter from your rack. This is optional; you are not required to use an event simply because you have one.

When you play a Random Event, find it in the list in the pull-out and apply the effect described. Don't worry about memorizing all these rules now, just refer to the pull-out section (or to the summary on the back of it) when you need to see what an event does.

15 MAGIC

GR-M-1

Historical Note: *Magic was developed in the far-off land of Irilax and brought to Kadab by the famous magician Yazilik. He established a great school of the wizardly arts and named it Yazilik University (mages are known for their giant egos). When the university was accidentally destroyed (the fanatical members of the declining priesthood of Sulugi accidentally pointed a powerful temple artifact at the school and accidentally shouted "Destroy the vile wizards!"), not only the terrain of Kadab was irrevocably altered. Many strange and wondrous magic items were scattered throughout the Empire. The minor noble who finds and correctly uses these powerful trinkets may be the one that finally reunites the shattered kingdom.*

Then again, maybe not.

The playing cup contains many magic item counters. Each magic item may be used once, and then must be returned to the cup (***exception:*** see **7.5**). The effects of each item are described in the pull-out; again, don't feel compelled to memorize all of this stuff. That's why we gathered it up and put it there for you to refer to. Aren't we good?

Magic items may be played when appropriate, according to the description of their effects listed in the pull-out.

16 TWO AND THREE PLAYERS

Missing a minor noble or two? No problem! Here's what to do in a two and three player game:

★ Place two hexes of each terrain type and five sea hexes (instead of four) aside before laying out the board. The smaller board layout and starting positions are shown in the illustration.

★ In a two player game, the player order does not change at the end of each turn.

★ In a two or three player game, the income needed to build a Citadel is 15.

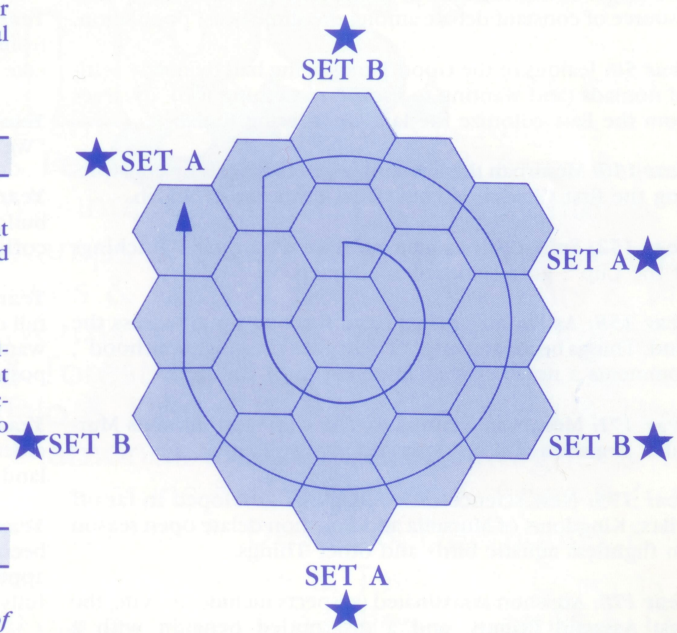

The arrow shows the order in which hexes must be layed out.

Stars indicate starting positions - the first player chooses which set will be used. In a two player game the 2nd player must choose the hex opposite the first.

Section 2

Requirements and Assumptions

Section 2
Requirements and Assumptions

Section 2A Functional Requirements

Functional requirements define what behavior and functionality the software must have. They have been described as following.

ID	Functional Requirement	Traceability
Setting Up the Game		
FR-SUG-1	Players choose one starting position one by one.	GR-SUG-1
FR-SUG-2	Each player can pick 10 golds, take one tower and put it on one of his hex.	GR-SUG-3
FR-SUG-3	Players can pick 10 things and place some or all on the board.	GR-SUG-4
FR-SUG-4	Players have things on rack can exchange them for new ones.	GR-SUG-5
Gold and Income		
FR-GI-1	System give players the same amount of gold as their income during gold collection phase.	GR-GI-1
FR-GI-2	Players can collect gold based on the treasure value they own.	GR-GI-2
FR-GI-3	players can collect gold based on the value of special income counters they own.	GR-GI-3
Special Characters		
FR-SC-1	Players can modify the roll with their gold.	GR-SC-2

ID	Functional Requirement	Traceability
FR-SC-2	Players can choose one unowned special characters during recruiting special characters phase.	GR-SC-1
Recruiting Things		
FR-RT-1	Player can get one free recruit for controlling every two land hex.	GR-RT-1
FR-RT-2	Players can spend 5 golds to draw one additional counter.(No more than 25 golds)	GR-RT-2
FR-RT-3	Players can exchange 2 unused counters to draw one additional counter.	GR-RT-3
FR-RT-4	System hold players' counter within 10 on two racks.	GR-RT-4
Movement		
FR-M-1	Players can make a movement.	GR-M-1
FR-M-2	Players can move into enemy or unexplored territory.	GR-M-8
Combat		
FR-C-1	Players can announce and resolves any one battle.	GR-C-2
FR-C-2	Players roll die to inflict hits on the enemy army for each different types of creatures.	GR-C-5
FR-C-3	Players and their opponent can roll for all creatures which can fight in that step.	GR-C-7
FR-C-4	Players as attacker can retreat at the end of each combat round.	GR-C-9
FR-C-5	System force players to declare he will inflict hit on whom.	GR-C-13

ID	Functional Requirement	Traceability
Forts		
FR-F-1	Players can pay 5 golds to build a tower on hex without a fort.	GR-F-2
FR-F-2	Players can pay 5 gold to upgrade the fort when there is one.	GR-F-3
Special Character Abilities		
FR-SCA-1	System limit special characters' power based on different situations.	GR-SCA-1
Random Event		
FR-RE-1	Players can choose to play one event counter from their rack.	GR-RE-1
Magic		
FR-M-1	System limit each magic item can only be used once.	GR-M-1

Section 2B Non-Functional Requirements

ID	Non-Functional Requirement	Traceability
Setting Up the Game		
NFR-SUG-1	System give each player a set of control marks and put on the their starting hex to show the ownership.	GR-SUG-2
Movement		
NFR-M-1	System control players' movement within 4 or 2 hex.	GR-M-2
NFR-M-2	System limit player's certain creature in the same hex with in 10.	GR-M-3
NFR-M-3	System pin creatures in the same hex as enemy counters.	GR-M-4
NFR-M-4	System allow flying creatures move onto a sea hex.	GR-M-5
NFR-M-5	System allow flying creatures fly over enemy-occupied hexes.	GR-M-6
NFR-M-6	System allow players' flying creature keep moving based on certain situation.	GR-M-7
NFR-M-7	System marks the stack of creatures enter enemy or unexplored territory.	GR-M-9
NFR-M-8	System keep enemy unit with combat value halting army's movement.	GR-M-10
NFR-M-9	System stop counters that move into unexplored territory moving.	GR-M-11
NFR-M-10	System allow players conquer any enemy hex without a battle in certain situation.	GR-M-12
Exploration		

ID	Non-Functional Requirement	Traceability
NFR-E-1	System determine the hex's defense according to players' rolled die.	GR-E-1
Combat		
NFR-C-1	System resolved all battles during combat phase.	GR-C-1
NFR-C-2	System limit players resolving one per player segment under certain situation.	GR-C-3
NFR-C-3	System over phase when no battle to fight and no hex to explore.	GR-C-4
NFR-C-4	System keep players from rolling a die for creatures with a C printed on counters.	GR-C-6
NFR-C-5	System marks the counter takes fewer hits than the combat value.	GR-C-8
NFR-C-6	System limit players to retreat under certain situations.	GR-C-10
NFR-C-7	System change building's situation based on points on die rolled by players.	GR-C-11
NFR-C-8	System allow players place counters from rack on captured hex.	GR-C-12
Forts		
NFR-F-1	System only allow players with income more than 20 to build.	GR-F-1
NFR-F-2	System limit one fort on one hex.	GR-F-4
NFR-F-3	System give palavers gold based on their total level of forts for each turn.	GR-F-5
NFR-F-4	System add combat value by fort's level.	GR-F-6

ID	Non-Functional Requirement	Traceability
Winning the Game		
NFR-WG-1	System keep players who own citadel from building another one.	GR-WG-1
NFR-WG-2	Players can only count their income to find if they are eligible to build a citadel.	GR-WG-2
NFR-WG-3	System only allow citadel be lost by conquest.	GR-WG-3
NFR-WG-4	System limit players win by conquest when there are two or more citadels on the board.	GR-WG-4
NFR-WG-5	System keep players holding the citadels until the end of construction phase of next turn to win in certain situation.	GR-WG-5
NFR-WG-6	System allow players build another citadel after they losing it.	GR-WG-6

Section 2C Assumptions

ID	Assumption	Justification
A-01	Any player exits the game, the game ends.	No meaning to continue a game set to fixed players with fewer players.
A-02	No player can exit the game.	Any player exit the game will result in ending the game.
A-03	Players wish to know the current state of the game.	The board game itself displays important game information.
A-04	Players wish to play the game without unnecessary slowdown.	The use of a software should smooth out the experience of the original board.

Section 3

Use Case

Section 3
Use Case Diagrams & Descriptions

Section 3A Use Case Diagram

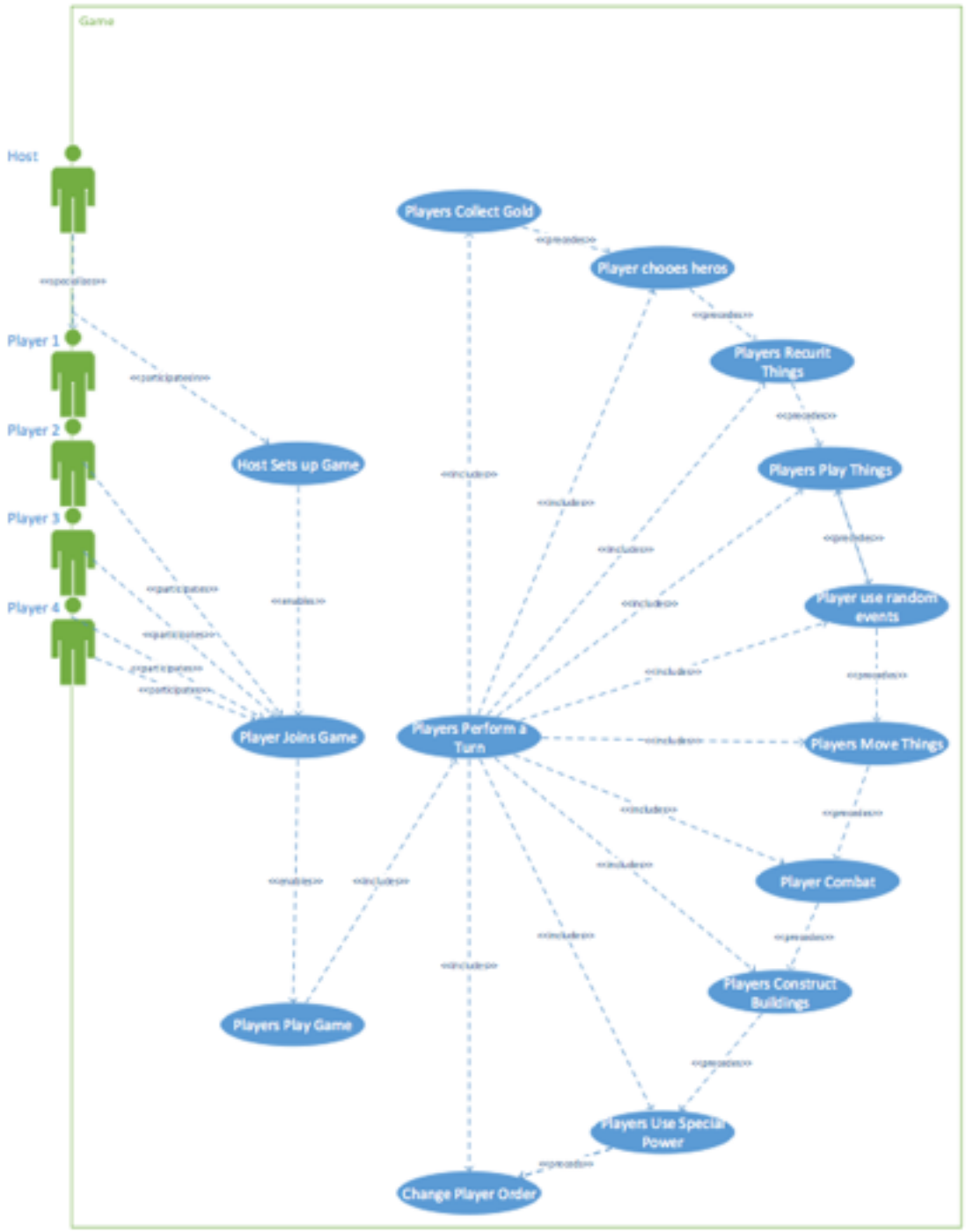

Section 3B Use Case Descriptions

Use Case ID	UC-1 Host Set Up Game
Description	The use case models a player starting a new game
External Actors	player
Related Use Cases	UC-3
Precondition	A game is not currently in progress
Triggering event	The player choose to start the system 1) The player log in the system. 2) The system verifies the account. 3) The player can create a new game. 4) The system creates a new game and wait for players to join.
Resulting event	Player can join the game.
Postcondition	Game has been created, waiting for other players.
Alternatives	N/A
Nonfunctional requirements	N/A
Comments	N/A

Use Case ID	UC-2 Player Joins Games
Description	This use case describes a Player joining a hosted game of Kings n' Things
Actors	Player
Triggering Event	Player accesses relevant server
Pre-Condition	The host has setup a game and is waiting for *others* players to join
Main Sequence	1. Player selects a hosted game of Kings N Things 2. Player joins the hosted game 3. Game notifies player that s/he has successfully joined the game
Post-Condition	The player views the game view
Resulting Event	The player waits until game starts
Alternative Scenarios	3a. Player fails to connect to game and its client terminates
NFRs	N/A
Comments	N/A

Use Case ID	UC-3 Player Play Games
Description	This use case describes 4 Players playing a game of Kings n' Things
Actors	3 or 4 Players
Triggering Event	Final player has joined the game
Pre-Condition	4 Players have joined a Game
Main Sequence	1. Player choose hex positions 2. Players are given their initial gold 3. Players place initial control markers in player order 4. Players place their initial tower in player order 5. All Players receive initial things 6. Players play initial things in player order 7. Repeatedly: a. Players Perform a Turn of Kings N' Things b. Game determines if a Player has won i. If so, Player wins ii. else loop back to 7a
Post-Condition	Game has declared a winner
Resulting Event	Game ends
Alternative Scenarios	N/A
NFRs	N/A
Comments	N/A

Use Case ID	UC-4 Players Perform a Turn
Description	This use case describes 4 players playing a turn within a game of Kings n' Things
Actors	3 or 4 Players
Triggering Event	First turn OR previous turn has ended without a winner
Pre-Condition	Player order is set
Main Sequence	1. Players collect gold. 2. Players choose their heroes. 3. Player Recruit Things. 4. Players play with things. 5. Players use random event 6. Players move things 7. Player combat. 8. Players use special power. 9. Player construct buildings. 10. Change players order.
Post-Condition	All players have played another turn
Resulting Event	Players are ready to play another turn
Alternative Scenarios	N/A
NFRs	NFR-SUG-1
Comments	N/A

Use Case ID	UC-5 Players Collect Gold
Description	This use case describes the steps for the players to collect golds.
Actors	3 or 4 Players
Triggering Event	Player play games has finished.
Pre-Condition	“The Bank” is not empty.
Main Sequence	In play order, each Player collects gold based on different situations.
Post-Condition	Players have received their golds
Resulting Event	Players are ready to choose heroes.
Alternative Scenarios	1. Player get one gold for each hex controlled. 2. Players get as much gold as his/her combat value. 3. Players get as much gold as incomer counter on board. 4.Players get as much gold as the number of heroes controlled.
NFRs	N/A
Comments	N/A

Use Case ID	UC-6 Player Choose Heroes
Description	This use case describes the steps for the players to choose heroes.
Actors	3 or 4 Players
Triggering Event	Players collect golds phase has finished.
Pre-Condition	“The Bank” has set up the 10 heroes.
Main Sequence	In play order, each Player choose one hero and roll a dice.
Post-Condition	Players have chosen their heroes.
Resulting Event	Players are ready to recruit things.
Alternative Scenarios	1. If the dice value is larger than the hero value, player get the hero and place the hero. 2. else change to next player.
NFRs	N/A
Comments	N/A

Use Case ID	UC-7 Players Recruit Things
Description	This use case describes the steps for the players to get things
Actors	3 or 4 Players
Triggering Event	UC-6 has finished
Pre-Condition	“The Bank” has set up all the things
Main Sequence	1. In play order, each Player obtains things from “the cup” based on the number of hex tiles they control. 2. In play order, each Player can optionally recruit things at the cost of gold. 3. In play order, each player can trade their thing at the rate of 2-1. 4. In play order, each player can drop their things.
Post-Condition	Players have received their things
Resulting Event	Players are ready to play things
Alternative Scenarios	N/A
NFRs	N/A
Comments	N/A

Use Case ID	UC-8 Player Play Things
Description	This use case describes the steps for the players to play things
Actors	3 or 4 Players
Triggering Event	Players are ready to play things
Pre-Condition	N/A
Main Sequence	In player order, each player takes things from his/her rack and places them on a tile s/he owns.
Post-Condition	Player's Things have been played to their tiles
Resulting Event	Players are ready to move things
Alternative Scenarios	N/A
NFRs	N/A
Comments	N/A

Use Case ID	UC-9 Players Use Random Events
Description	
Actors	3 or 4 Players
Triggering Event	
Pre-Condition	
Main Sequence	
Post-Condition	
Resulting Event	
Alternative Scenarios	
NFRs	
Comments	

Use Case ID	UC-10 Players Move Things
Description	This use case describes 4 Players moving their Things in a game of Kings N' Things
Actors	3 or 4 Players
Triggering Event	Players are ready to move things
Pre-Condition	Things are in play
Main Sequence	In playing order, in each hex tile he/she owns: 1. The current player selects things (if any) to move from the current selected tile. 2. The current player attempts to move the selected things by selecting their destination. 3. Game carries out the attempted move to an hex tile owned by the current player.
Post-Condition	Things have been moved
Resulting Event	Players are ready to battle
Alternative Scenarios	Alternative 1 The target destination is an unexplored tile: A3.1 Game makes defenders of target tile appear A3.2 Player confirms or cancels current movement Alternative 2 The target destination is an invalid destination: B3.1 Game notifies player that destination is invalid B3.2 Game offers player possibility of selecting an alternative destination or canceling the current movement. Alternative 3 The target destination is a hex tile owned by another player: C3. Game carries out move and marks the destination with a combat marker.
NFRs	NFR-M-1, 2, 3, 4, 5, 6, 7, 8, 9, 10
Comments	N/A

Use Case ID	UC-11 Player Combat
Description	This use case describes 4 Players combat each other.
Actors	3 or 4 Players
Triggering Event	Combat markers have been placed on the game
Pre-Condition	N/A
Main Sequence	In *each* hex tile with a combat marker, repeat the following steps until the game declares the current combat to be over: 1. If more than two players are involved in the current battle, then the game asks each participant to select another participant of this battle as target. 2. Each participant rolls for each of his/her creatures involved in the current round of combat to determine how many hits s/he inflicts to his/her selected target. 3. For each hit received by a participant, the game asks that participant to select a thing to discard for its army involved in that combat. 4. The game discards all selected things of all relevant participants 5. The game offers each relevant participant the possibility of retreating. 6. The game declares combat to be over in this tile if none or a single participant is left in this tile, in which case: a. the combat marker is removed from this tile b. the status of any fort in that tile is resolved
Post-Condition	No combat marker is left
Resulting Event	N/A
Alternative Scenarios	2a. Tile has no fort so no fort is placed on the tile 2b. Battle had no victor, so the tile is set to neutral territory
NFRs	NFR-C-1, 2, 3, 4, 5, 6, 7, 8
Comments	N/A

Use Case ID	UC-12 Players Construct Buildings
Description	This use case describes players build or update their forts.
Actors	3 or 4 Players
Triggering Event	Combat phase has finished.
Pre-Condition	Player has at least 5 gold for construction.
Main Sequence	Players build their fort or update the fort depends on different situation.
Post-Condition	Players have built or updated their forts
Resulting Event	Players can use special power.
Alternative Scenarios	1. Player has already had one fort so they just update it.
NFRs	NFR-F-1, 2, 3, 4
Comments	N/A

Use Case ID	UC-13 Players Use Special Power
Description	This use case describes players how use their hero's special power.
Actors	3 or 4 Players
Triggering Event	construction phase has finished.
Pre-Condition	There is at least one hero in the player hex.
Main Sequence	Players use heroes' special power to benefit.
Post-Condition	Players have received their benefit.
Resulting Event	Players are ready to finish this turn.
Alternative Scenarios	N/A
NFRs	N/A
Comments	N/A

Use Case ID	UC-14 Change Player Order
Description	This use case describes system change players' order to begin next turn.
Actors	3 or 4 Players
Triggering Event	special power phase has finished.
Pre-Condition	N/A.
Main Sequence	System change players' play order for next turn.
Post-Condition	Players' order has been changed by the system.
Resulting Event	Players are ready to get into next turn.
Alternative Scenarios	N/A
NFRs	N/A
Comments	N/A

Use Case ID	UC-15 Players Wins
Description	This use case describes the steps once a winner has been determined
Actors	3 or 4 Players
Triggering Event	The game has determined a winner
Pre-Condition	N/A
Main Sequence	1. The game notifies each player who is the winner. 2. The game disconnects each player from itself.
Post-Condition	All players have been disconnected from the game
Resulting Event	The game has been removed from the system
Alternative Scenarios	N/A
NFRs	N/A
Comments	N/A

Section 3C Responsibilities

ID	Responsibility	Use Case(s)
RESP-1	The player log in the system.	UC-1
RESP-2	The system verifies the account.	UC-1
RESP-3	The player can create a new game.	UC-1
RESP-4	The system creates a new game and wait for players to join.	UC-1
RESP-5	The player wait other players to join in.	UC-1
RESP-6	Player selects a hosted game of Kings N Things	UC-2
RESP-7	Player joins the hosted game	UC-2
RESP-8	Game notifies player that s/he has successfully joined the game	UC-2
RESP-9	Player choose hex positions	UC-3
RESP-10	Players are given their initial gold	UC-3
RESP-11	Players place initial control markers in player order	UC-3
RESP-12	Players place their initial tower in player order	UC-3
RESP-13	All Players receive initial things	UC-3
RESP-14	Players play initial things in player order	UC-3
RESP-15	A player wins the game.	UC-3
RESP-16	Players collect gold.	UC-4
RESP-17	Players choose their heroes	UC-4
RESP-18	Player Recruit Things.	UC-4
RESP-19	Players play with things	UC-4
RESP-20	Players use random event	UC-4
RESP-21	Players move things	UC-4
RESP-22	Player combat.	UC-4
RESP-23	Players use special power.	UC-4
RESP-24	Player construct buildings.	UC-4
RESP-25	Change players order.	UC-4
RESP-26	Player get one gold for each hex controlled.	UC-5
RESP-27	Players get as much gold as his/her combat value.	UC-5
RESP-28	Players get as much gold as incomer counter on board.	UC-5

ID	Responsibility	Use Case(s)
RESP-29	Players get as much gold as the number of heroes controlled.	UC-5
RESP-30	If the dice value is larger than the hero value, player get the hero and place the hero.	UC-6
RESP-31	Else change to next player.	UC-6
RESP-32	In play order, each Player obtains things from “the cup” based on the number of hex tiles they control.	UC-7
RESP-33	In play order, each Player can optionally recruit things at the cost of gold.	UC-7
RESP-34	In play order, each player can trade their thing at the rate of 2-1.	UC-7
RESP-35	In play order, each player can drop their things.	UC-7
RESP-36	In player order, each player takes things from his/her rack and places them on a tile s/he owns.	UC-8
RESP-37	The current player selects things (if any) to move from the current selected tile.	UC-10
RESP-38	The current player attempts to move the selected things by selecting their destination.	UC-10
RESP-39	Game carries out the attempted move to an hex tile owned by the current player.	UC-10
RESP-40	Game makes defenders of target tile appear	UC-10
RESP-41	Player confirms or cancels current movement	UC-10
RESP-42	Game notifies player that destination is invalid	UC-10
RESP-43	Game offers player possibility of selecting an alternative destination or canceling the current movement.	UC-10
RESP-44	Game carries out move and marks the destination with a combat marker.	UC-10
RESP-45	If more than two players are involved in the current battle, then the game asks each participant to select another participant of this battle as target.	UC-11
RESP-46	Each participant rolls for each of his/her creatures involved in the current round of combat to determine how many hits s/he inflicts to his/her selected target.	UC-11
RESP-47	For each hit received by a participant, the game asks that participant to select a thing to discard for its army involved in that combat.	UC-11
RESP-48	The game discards all selected things of all relevant participants	UC-11
RESP-49	The game offers each relevant participant the possibility of retreating.	UC-11

ID	Responsibility	Use Case(s)
RESP-50	The game declares combat to be over in this tile if none or a single participant is left in this tile when the combat marker is removed from this tile.	UC-11
RESP-51	The game declares combat to be over in this tile if none or a single participant is left in this tile when the status of any fort in that tile is resolved.	UC-11
RESP-52	The game declares combat to be over in this tile if none or a single participant is left when tile has no fort so no fort is placed on the tile	UC-11
RESP-53	The game declares combat to be over in this tile if none or a single participant is left in this tile when battle had no victor, so the tile is set to neutral territory	UC-11
RESP-54	Players build their fort when there is no one.	UC-12
RESP-55	Players update their fort when there is already one.	UC-12
RESP-56	Players use heroes' special power benefit.	UC-13
RESP-57	System change players' play order for next turn.	UC-14
RESP-58	The game notifies each player who is the winner.	UC-15
RESP-59	The game disconnects each player from itself.	UC-15

Section 3D Unbound Use Case Maps

UUCM-1

TE-1	The player choose to start the system	
RE-1	Player can join the game.	
ID	Responsibility	Use Case(s)
RESP-1	The player log in the system.	UC-1
RESP-2	The system verifies the account.	UC-1
RESP-3	The player can create a new game.	UC-1
RESP-4	The system creates a new game and wait for players to join.	UC-1
RESP-5	The player wait other players to join in.	UC-1

UUCM-2

TE-2	Player accesses relevant server	
RE-2	The player waits until game starts	
ID	Responsibility	Use Case(s)
RESP-6	Player selects a hosted game of Kings N Things	UC-2
RESP-7	Player joins the hosted game	UC-2
RESP-8	Game notifies player that s/he has successfully joined the game	UC-2

UUCM-3

TE-3	Final player has joined the game	
RE-3	Game ends	
ID	Responsibility	Use Case(s)
RESP-9	Player choose hex positions	UC-3
RESP-10	Players are given their initial gold	UC-3
RESP-11	Players place initial control markers in player order	UC-3
RESP-12	Players place their initial tower in player order	UC-3
RESP-13	All Players receive initial things	UC-3
RESP-14	Players play initial things in player order	UC-3
RESP-15	A player wins the game.	UC-3

UUCM-4

TE-4	First turn OR previous turn has ended without a winner	
RE-4	Players are ready to play another turn	
ID	Responsibility	Use Case(s)
RESP-16	Players collect gold.	UC-4
RESP-17	Players choose their heroes	UC-4
RESP-18	Player Recruit Things.	UC-4
RESP-19	Players play with things	UC-4
RESP-20	Players use random event	UC-4
RESP-21	Players move things	UC-4
RESP-22	Player combat.	UC-4
RESP-23	Players use special power.	UC-4
RESP-24	Player construct buildings.	UC-4
RESP-25	Change players order.	UC-4

UUCM-5

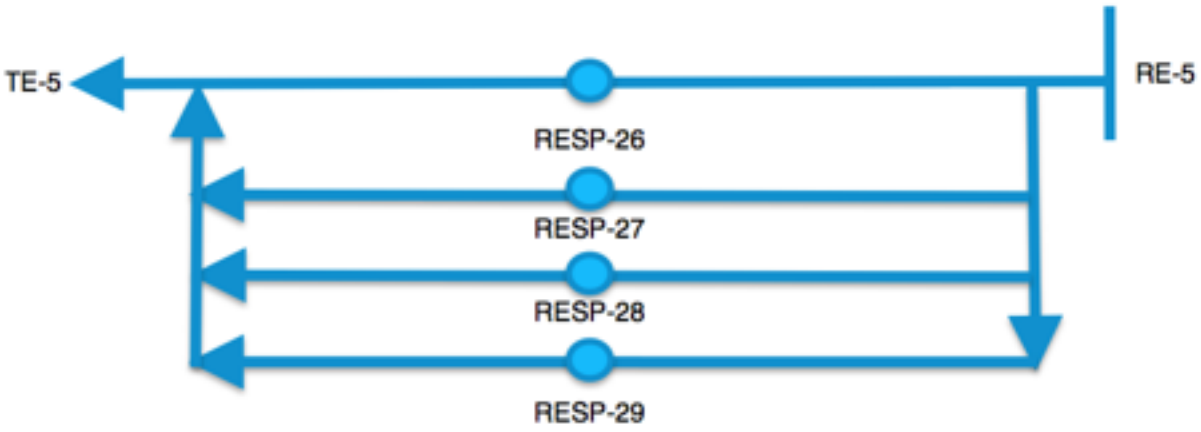

TE-5	Player play games has finished.	
RE-5	Players are ready to choose heroes.	
ID	Responsibility	Use Case(s)
RESP-26	Player get one gold for each hex controlled.	UC-5
RESP-27	Players get as much gold as his/her combat value.	UC-5
RESP-28	Players get as much gold as incomer counter on board.	UC-5
RESP-29	Players get as much gold as the number of heroes controlled.	UC-5

UUCM-6

TE-6	Players collect golds phase has finished.	
RE-6	Players are ready to recruit things.	
ID	Responsibility	Use Case(s)
RESP-30	If the dice value is larger than the hero value, player get the hero and place the hero.	UC-6
RESP-31	Else change to next player.	UC-6

UUCM-7

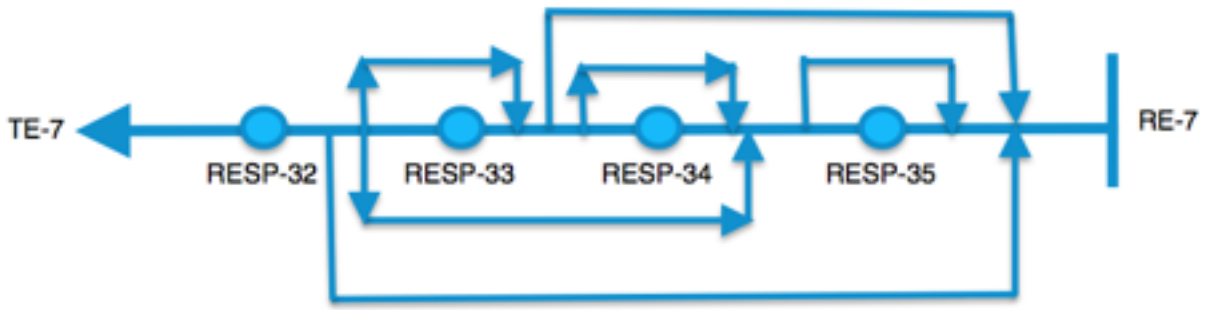

TE-7	UC-6 has finished	
RE-7	Players are ready to play things	
ID	Responsibility	Use Case(s)
RESP-32	In play order, each Player obtains things from “the cup” based on the number of hex tiles they control.	UC-7
RESP-33	In play order, each Player can optionally recruit things at the cost of gold.	UC-7
RESP-34	In play order, each player can trade their thing at the rate of 2-1.	UC-7
RESP-35	In play order, each player can drop their things.	UC-7

UUCM-8

TE-8	Players are ready to play things	
RE-8	Players are ready to move things	
ID	Responsibility	Use Case(s)
RESP-36	In player order, each player takes things from his/her rack and places them on a tile s/he owns.	UC-8

UUCM-9

TE-9		
RE-9		
ID	Responsibility	Use Case(s)
		UC-9

UUCM-10

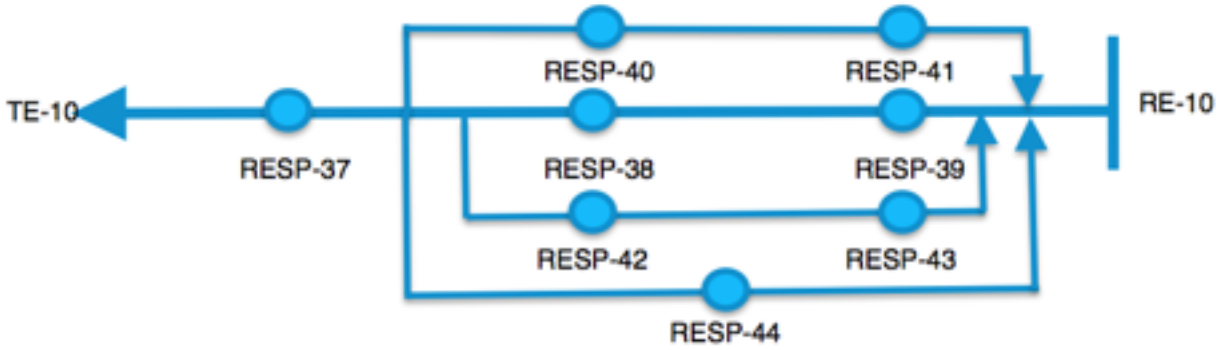

TE-10	Players are ready to move things	
RE-10	Players are ready to battle	
ID	Responsibility	Use Case(s)
RESP-37	The current player selects things (if any) to move from the current selected tile.	UC-10
RESP-38	The current player attempts to move the selected things by selecting their destination.	UC-10
RESP-39	Game carries out the attempted move to an hex tile owned by the current player.	UC-10
RESP-40	Game makes defenders of target tile appear	UC-10
RESP-41	Player confirms or cancels current movement	UC-10
RESP-42	Game notifies player that destination is invalid	UC-10
RESP-43	Game offers player possibility of selecting an alternative destination or canceling the current movement.	UC-10
RESP-44	Game carries out move and marks the destination with a combat marker.	UC-10

UUCM-11

TE-11	Combat markers have been placed on the game	
RE-11	N/A	
ID	Responsibility	Use Case(s)
RESP-45	If more than two players are involved in the current battle, then the game asks each participant to select another participant of this battle as target.	UC-11
RESP-46	Each participant rolls for each of his/her creatures involved in the current round of combat to determine how many hits s/he inflicts to his/her selected target.	UC-11
RESP-47	For each hit received by a participant, the game asks that participant to select a thing to discard for its army involved in that combat.	UC-11
RESP-48	The game discards all selected things of all relevant participants	UC-11
RESP-49	The game offers each relevant participant the possibility of retreating.	UC-11
RESP-50	The game declares combat to be over in this tile if none or a single participant is left in this tile when the combat marker is removed from this tile.	UC-11
RESP-51	The game declares combat to be over in this tile if none or a single participant is left in this tile when the status of any fort in that tile is resolved.	UC-11
RESP-52	The game declares combat to be over in this tile if none or a single participant is left when tile has no fort so no fort is placed on the tile	UC-11
RESP-53	The game declares combat to be over in this tile if none or a single participant is left in this tile when battle had no victor, so the tile is set to neutral territory	UC-11

UUCM-12

TE-12	Combat phase has finished.	
RE-12	Players can use special power.	
ID	Responsibility	Use Case(s)
RESP-54	Players build their fort when there is no one.	UC-12
RESP-55	Players update their fort when there is already one.	UC-12

UUCM-13

TE-13	Construction phase has finished.	
RE-13	Players are ready to finish this turn	
ID	Responsibility	Use Case(s)
RESP-56	Players use heroes' special power benefit.	UC-13

UUCM-14

TE-14	special power phase has finished.	
RE-14	Players are ready to get into next turn.	
ID	Responsibility	Use Case(s)
RESP-57	System change players' play order for next turn.	UC-14

UUCM-15

TE-13	The game has determined a winner	
RE-13	The game has been removed from the system	
ID	Responsibility	Use Case(s)
RESP-58	The game notifies each player who is the winner.	UC-15
RESP-59	The game disconnects each player from itself.	UC-15

Section 3E Bound Use Case Maps

The bound use case maps below correspond to the previous unbound ones. Following each map are descriptions for triggering and resulting events.

BUCM - 4

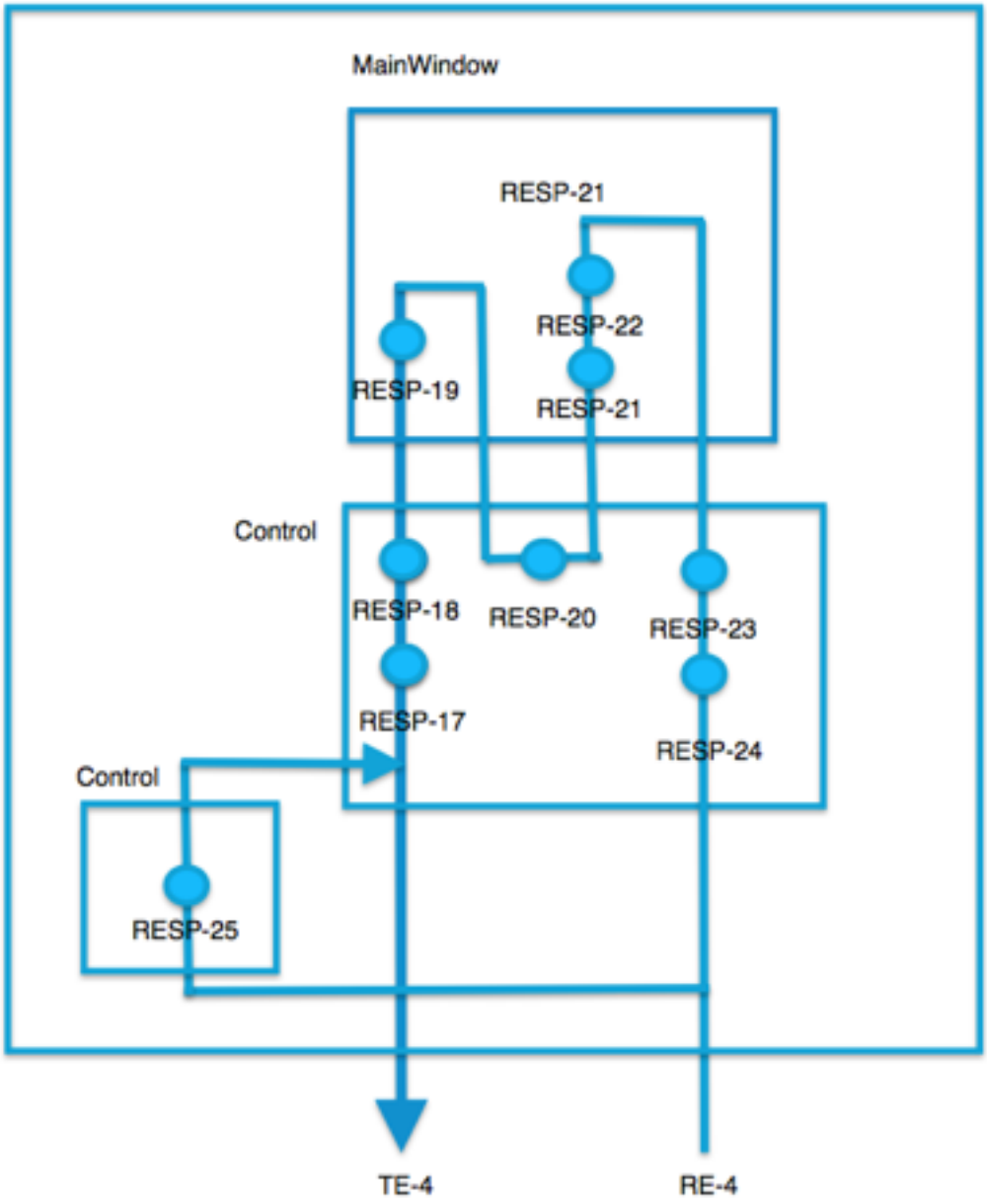

TE-4	First turn OR previous turn has ended without a winner
RE-4	Players are ready to play another turn

BUCM - 5

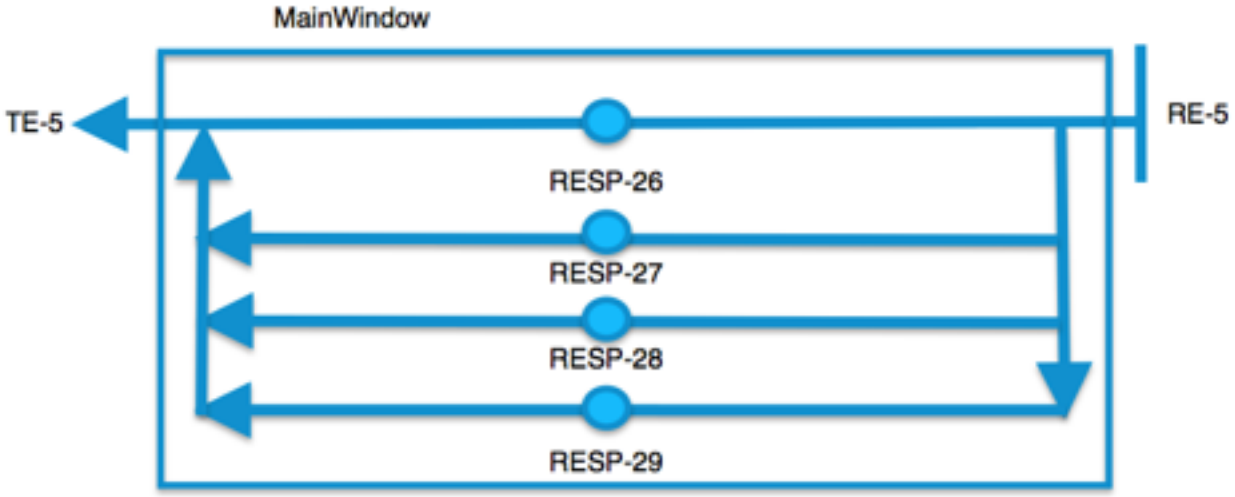

TE-5	Player play games has finished.
RE-5	Players are ready to choose heroes.

BUCM - 6

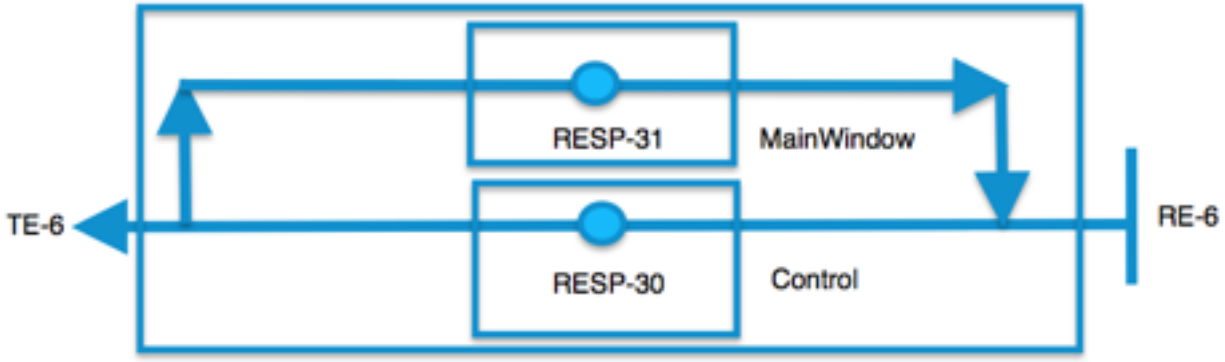

TE-6	Players collect golds phase has finished.
RE-6	Players are ready to recruit things.

BUCM - 7

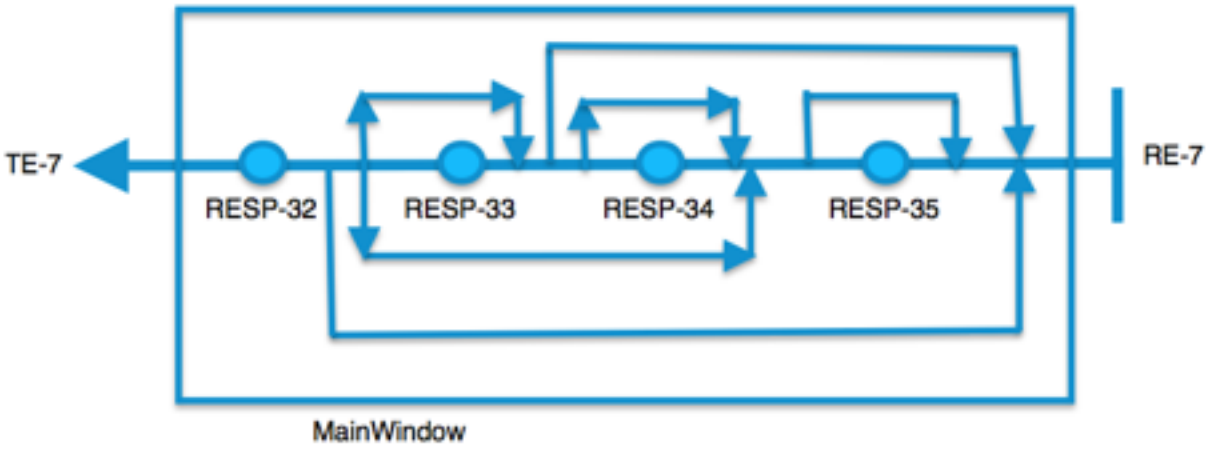

TE-7	UC-6 has finished
RE-7	Players are ready to play things

BUCM - 8

TE-8	Players are ready to play things
RE-8	Players are ready to move things

BUCM - 9

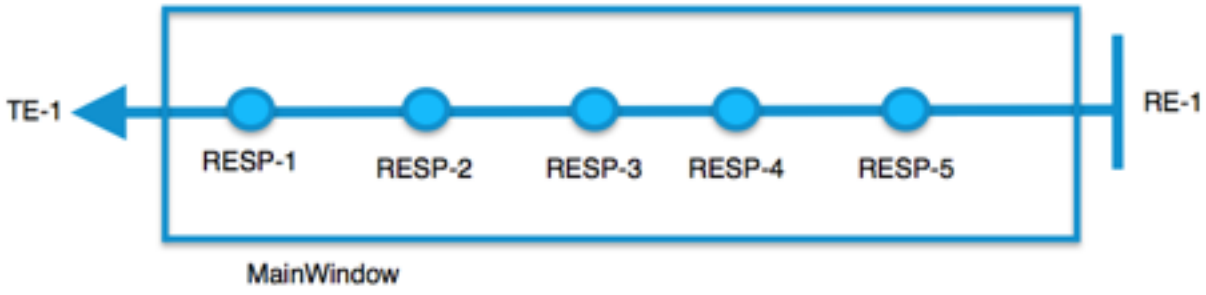

TE-9	
RE-9	

BUCM - 10

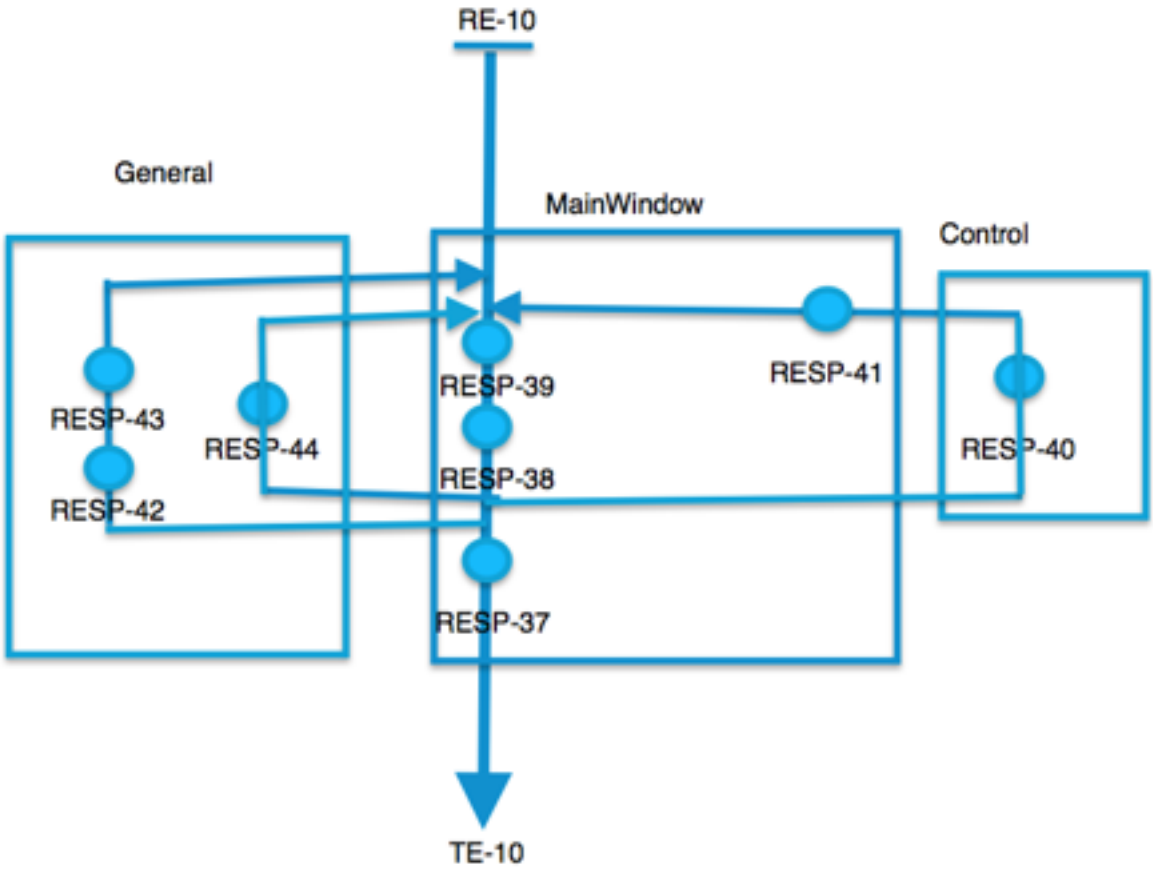

TE-10	Players are ready to move things
RE-10	Players are ready to battle

BUCM - 11

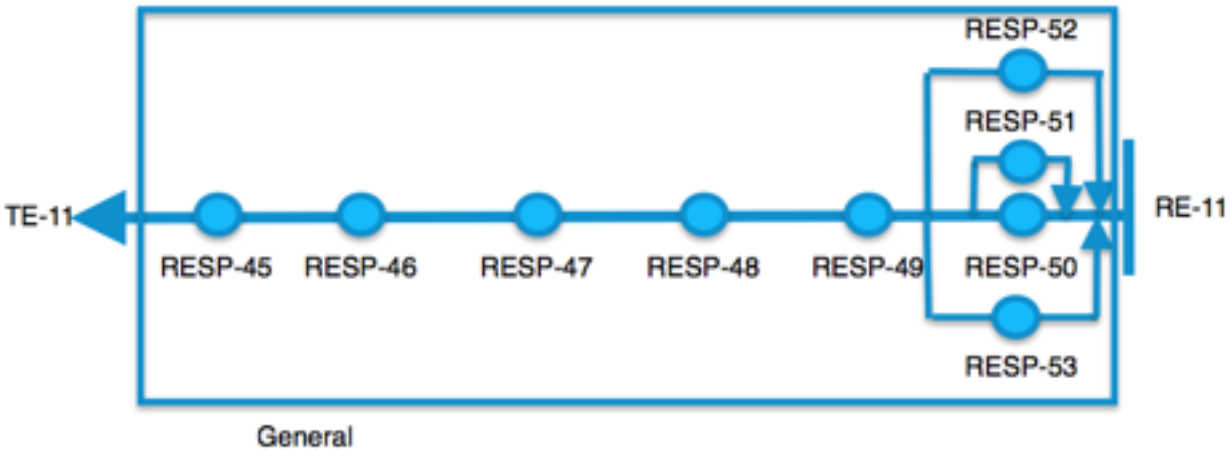

TE-11	Combat markers have been placed on the game
RE-11	N/A

BUCM - 12

TE-12	Combat phase has finished.
RE-12	Players can use special power.

BUCM - 13

TE-13	Construction phase has finished.
RE-13	Players are ready to finish this turn

BUCM - 14

TE-14	special power phase has finished.
RE-14	Players are ready to get into next turn.

BUCM - 15

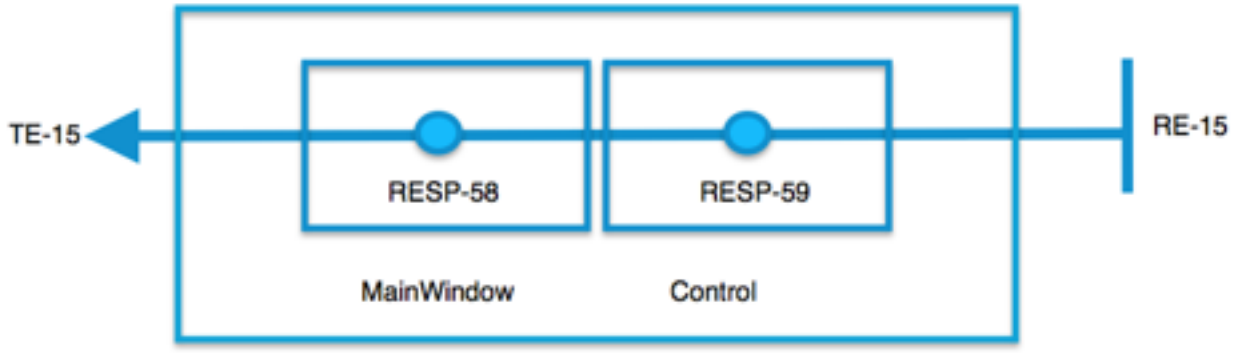

TE-15	The game has determined a winner
RE-15	The game has been removed from the system

BUCM - 16

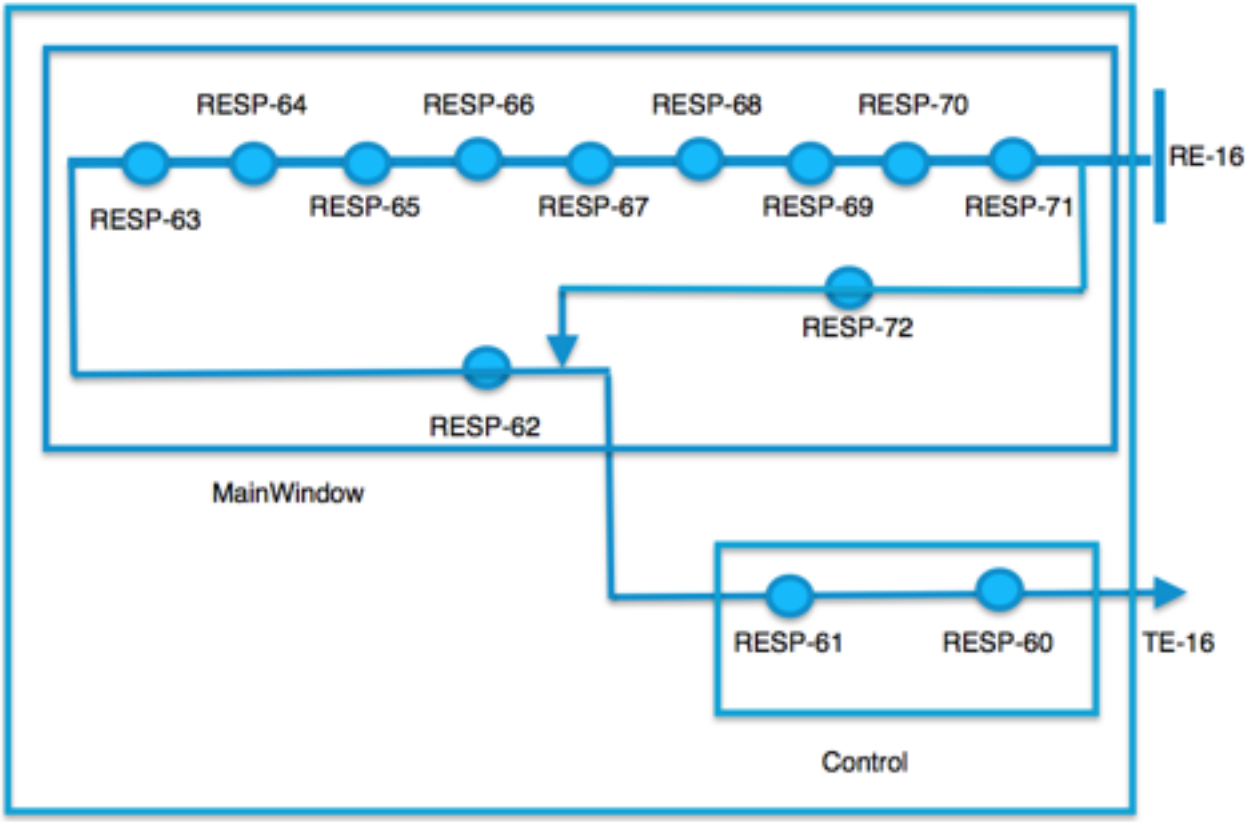

TE-16	The game has determined a winner
RE-16	The game has been removed from the system

Section 4

Design Decisions and Pattern Use

Section 4
Design Decisions & Pattern Use

Section 4A Decisions

ID	Design Decision	Tracebility
DP-01	**Client-server model for networking** We decided to use a client-server model for our networking. The server will receive and send all the message of the client and import and export the data depends on different situation.	Group Decision
DP-02	**Singletons** It make sense that some key main system classes(control, MainWindow and some widget) be Singletons. Only one instance of each of there should ever exist, only one is needed, and access to their instance is required across the code. The code and design is more straight-forward thanks to this decision	Group Decision
DP-03	**Things, Hex, Hero and the Strategy Pattern** The strategy pattern is extremely useful for implementing the All the player things, Hex, Hero, special character and so on. We want to create many instances and reuse the all the class, rather than implement all the different things specifically. Using the strategy pattern, we could do this and keep the code very clean and simple, organizing each Thing's individual action into a class called behavior.	Group Decision
DD-04	**Layout and interface** We are using QT creator for the entire game, So we can use different kind of widget all inherit from QWidget which make us easier to control all the widget and make some communication between them, and that is the main reason we choose QT to build this project, because we can easily build several widget and control them.	Group Decision

ID	Design Decision	Tracebility
DD-05	**Dragging and dropping things** To make an action with a things, the player mush select several things and drag them with the middle button of the mouse and place them into the hex. The basis of this design decision was from playing the board game in reality: the player would hold several things and place it to the hex that they want. This seemed more natural than selecting cards and actions with the keyboard, or even having to click upon a series of menus to make an action. The player just needs to drop the thing in the appropriate place to play.	Group Decision
DD-06	**Winning the game** For winning the game, player does not need to click on one specific button to check whether they win the game or not. All the checking is done automatically, as long as one player satisfy the condition, They system will tell the player that they win.	Group Decision
DD-07	**Graphical display of relevant statistics for each player** The game displays all the resource, player turn player phase at the top right of the screen with a Label to show which player turn, what is the phase now and how much gold each player has. This decision reduces interface clutter, and lets the player instantly view how much gold they have. But the Player cannot check the other player's Rack.	Group Decision
DD-08	**Testing** We follow the instruction of the final demo and create several instance to test all the function of the game, to check the function of each phase, such as Combat, Movement and so on, We use QT creator to do this project, as the active debugging information was printed through the consoles dialog, helping us in fixing the implementations	Group Decision

Section 5

Class Diagram

Section 5 Class Diagram

Section 5A Object Specifications

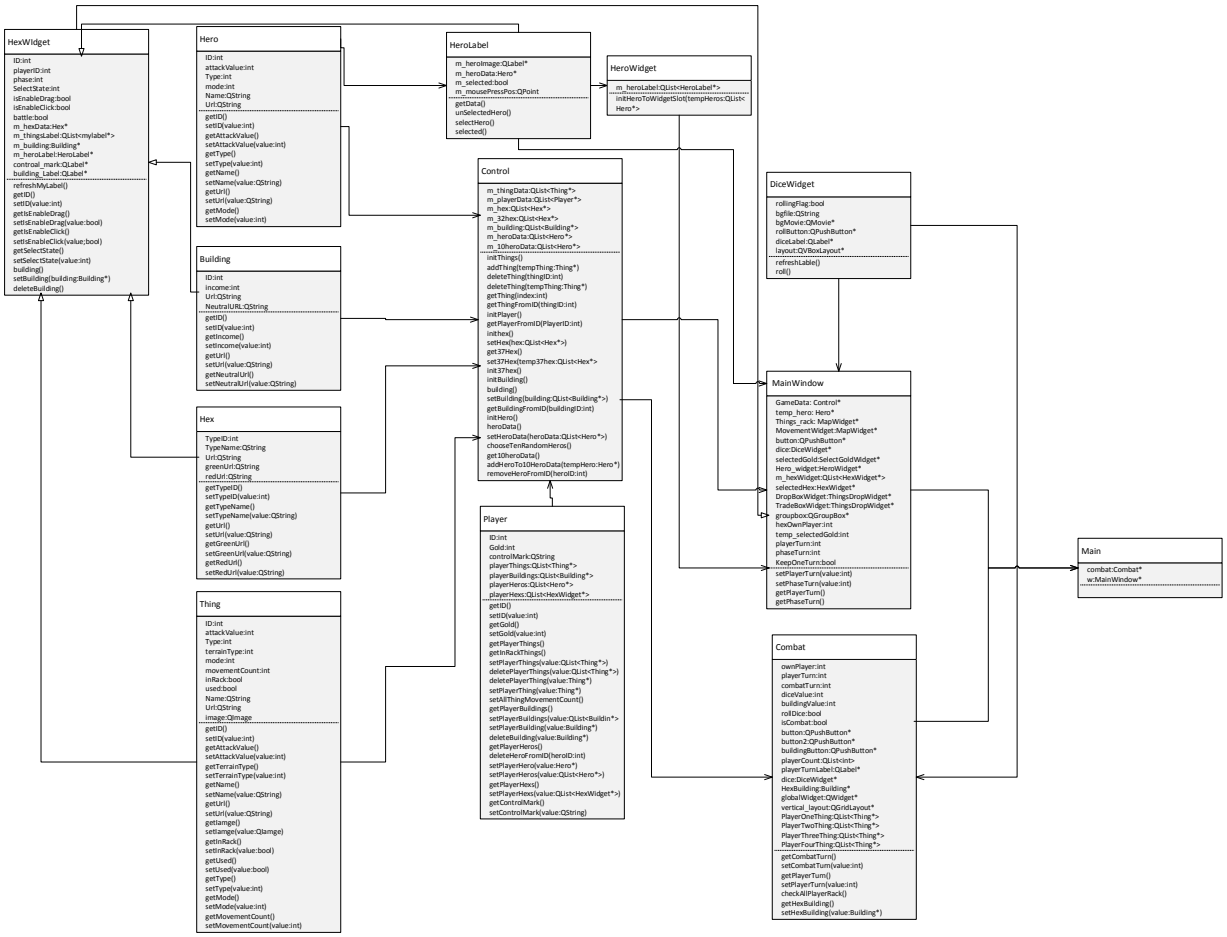

Section 5B Class Diagram

Name	ID	Description	Inheritance
Building	CD-1	Used to get and modify players' building information.	None

Data Member Dictionary			
Variable Name	Type	Status	Procedures
ID	int	Read/Write	getID() setID()
income	int	Read/Write	getIncome() setIncome()
Url	Qstring	Read/Write	getUrl() setUrl()
NeutralURL	Qstring	Read/Write	getNeutralURL() setNeutralURL()

Procedure Dictionary				
Procedure Name	Return Type	Parameter Name	Parameter Type	Responsibilities
getID()	int	N/A	N/A	Get buildings' ID.
setID()	void	value	int	Set buildings' ID
getIncome()	int	N/A	N/A	get income corresponded to the building.
setIncome()	void	value	int	Set building's income.
getUrl()	QString	N/A	N/A	Get buildings' URL
setUrl()	void	value	Qstring	Set buildings' URL
getNeutralURL()	Qstring	N/A	N/A	Get buildings' Neutral URL
setNeutralURL()	void	value	Qstring	Set buildings' Neutral URL

Section 5C hero

Name	ID	Description	Inheritance
Hero	CD-4	Used to get and modify players' hero information.	N/A

Data Member Dictionary			
Variable Name	Type	Status	Procedures
ID	int	Read/write	getID() setID()
AttackValue	int	Read/write	getAttackValue() setAttackValue()
Type	int	Read/write	getType() setType()
mode	int	Read/write	setMode() getMode()
Name	QString	Read/write	getName() setName()
Url	QString	Read/write	getUrl() setUrl()

Procedure Dictionary				
Procedure Name	Return Type	Parameter Name	Parameter Type	Responsibilities
getID()	int	N/A	N/A	Get heroes' ID.
setID()	void	value	int	Set heroes' ID
getAttackValue()	int	N/A	N/A	Get heroes' attack value.
setAttackValue()	void	value	int	Set heroes' attack value.
getType()	int	N/A	N/A	Get heroes' type.
setType()	void	value	int	Set heroes' type.
getMode()	int	N/A	N/A	Get heroes' mode.
setMode()	void	value	int	Set heroes' mode.
getName()	QString	N/A	N/A	Get heroes' name.
setName()	void	value	QString	Set heroes' name.
getUrl()	QString	N/A	N/A	Get heroes' URL.
setUrl()	void	value	QString	Set heroes' URL.

Section 5D hex

Name	ID	Description	Inheritance
Hex	CD-5	Used to get and modify hexes information.	N/A

Data Member Dictionary			
Variable Name	Type	Status	Procedures
TypeID	int	Read/Write	getTypeID() setTypeID()
TypeName	QString	Read/Write	getTypeName() setTypeName()
Url	QString	Read/Write	getUrl() setUrl()
greenUrl	QString	Read/Write	getGreenUrl() setGreenUrl()
redUrl	QString	Read/Write	getRedUrl() setRedUrl()

Procedure Dictionary				
Procedure Name	Return Type	Parameter Name	Parameter Type	Responsibilities
getTypeID()	int	N/A	N/A	Get hexes' type ID.
setTypeID()	void	value	int	Set hexes' type ID.
getTypeName()	QString	N/A	N/A	Get hexes' type name.
setTypeName()	void	value	QString	Set hexes' type name.
getUrl()	QString	N/A	N/A	Get hexes' URL.
setRul()	void	value	QString	Set hexes' URL.
getGreenUrl()	QString	N/A	N/A	Get green hexes' URL.
setGreenUrl()	void	value	QString	Set green hexes' URL.
getRedUrl()	QString	N/A	N/A	Get red hexes' URL.
setRedUrl()	void	value	QString	Set red hexes' URL.

Section 5E player

Name	ID	Description	Inheritance
Player	CD-7	Used to get and modify payers' information.	N/A

Data Member Dictionary			
Variable Name	Type	Status	Procedures
ID	int	Read/Write	getID() setID()
Gold	int	Read/Write	getGold() setGold()
controlMark	QString	Read/Write	getControlMarks() setControlMarks()
playerThings	QList<Things*>	Read/Write	getPlayerThings() getInRackThings() setPlayerThings() deletePlayerThings() deletePlayerThing() setPlayerThing() setAllThingsMovementCount()
PlayerBuildings	QList<Building*>	Read/Write	getPlayerBuildings() setPlayerBuildings() setPlayerBuilding() deleteBuilding()
playerHeros	QList<Hero*>	Read/Write	getPlayerHeros() deleteHeroFromID() deleteHero() setPlayerHero() setPlayerHeros()
playerHexs	QList<HexWidget*>	Read/Write	getPlayerHexs() setPlayerHexs() setPlayerHex() deleteHexWidget()

Procedure Dictionary				
Procedure Name	Return Type	Parameter Name	Parameter Type	Responsibilities
getID()	int	N/A	N/A	Get players' ID
setID	void	value	int	Set players' ID
getGold()	int	N/A	N/A	Get players' gold

Procedure Dictionary				
Procedure Name	Return Type	Parameter Name	Parameter Type	Responsibilities
setGold()	void	value	int	Set players' gold
getControlMark()	QString	N/A	N/A	Get players' control marks
setControlMark()	void	value	QString	Set players' control marks
getPlayerThings()	QList<Thing *>	N/A	N/A	Get players' things
getInRackThings()	QList<Thing *>	N/A	N/A	Get players' things for those are in rack.
setPlayerThings()	void	value	QList<Thing *>	Set players' things
deletePlayerThings ()	void	value	QList<Thing *>	Delete players' things
deletePlayerThing()	void	value	Thing	Delete players' one thing
setPlayerThing()	void	value	Thing	Set players' one thing
setAllThingsMovementCount()	void	count	int	Initial all the things' movement count.
getPlayerBuildings( )	QList<Building *>	N/A	N/A	Get players' buildings.
setPlayerBuildings( )	void	valure	QList<Building *>	Set players' buildings.
setPlayerBuilding()	void	value	Building	Set players' one building
deleteBuilding()	void	value	Building	Delete one of player's building.
getPlayerHeros()	QList<Hero *>	N/A	N/A	Get players' hero information..
deleteHeroFromID( )	void	heroID	int	Get players' hero information through heroes' ID.
deleteHero()	void	temp	Hero	Delete players' hero
setPlayerHero()	void	value	Hero	Set players' one hero information..
setPlayerHeros()	void	value	QList<Hero *>	Set players' heroes information..
getPlayerHexs()	QList<HexWidget *>	N/A	N/A	Get players' hex information..
setPlayerHexs()	void	value	QList<HexWidget *>	Set players' hex information..

Procedure Dictionary				
Procedure Name	Return Type	Parameter Name	Parameter Type	Responsibilities
setPlayerHex()	void	value	HexWidget	Set players' one hex information..
deleteHexWidget()	void	value	HexWidget	Delete players' hex widget.

Section 5F things

Name	ID	Description	Inheritance
Thing	CD-8	Used to get and modify payers' things.	N/A

Data Member Dictionary			
Variable Name	Type	Status	Procedures
ID	int	Read/Write	getID() setID()
attackValue	int	Read/Write	getAttackVlue() setAttackValue()
Type	int	Read/Write	getType() setType()
terrainType	int	Read/Write	getTerrainType() setTerrainType()
mode	int	Read/Write	getMode() setMode()
movementCount	int	Read/Write	getMovementCount() setMovementCount()
inRack	bool	Read/Write	getInRack() setInRack()
used	bool	Read/Write	getUsed() setUsed()
Name	QString	Read/Write	getName() setName()
Url	QString	Read/Write	getUrl() setUrl()
image	QImage	Read/Write	getImage() setImage()

Procedure Dictionary				
Procedure Name	Return Type	Parameter Name	Parameter Type	Responsibilities
getID()	int	N/A	N/A	Get thing's ID
setID()	void	value	int	Set thing's ID
getAttackValue()	int	N/A	N/A	Get thing's attack value
setAttackValue()	void	value	int	Set thing's attack value
getTerrainType()	int	N/A	N/A	Get thing's terrain type
setTerrainType()	void	value	int	Set thing's terrain type
getName()	QString	N/A	N/A	Get thing's name
setName()	void	value	QString	Set thing's name
getUrl()	QString	N/A	N/A	Get thing's URL
setUrl()	void	value	QString	Set thing's URL
getImage()	QImage	N/A	N/A	Get thing's Image
setImage()	void	value	QImage	Set thing's Image
getInRack()	bool	N/A	N/A	Check if things are in rack.
setInRack()	void	value	bool	Set if things are in rack or not.
getUsed()	bool	N/A	N/A	Check if things are used
setUsed()	void	value	bool	Set if things are used or not.
getType()	int	N/A	N/A	Get thing's Type
setType()	void	value	int	Set thing's Type
getMode()	int	N/A	N/A	Get thing's Mode
setMode()	void	value	int	Set thing's Mode
getMovementCount ()	int	N/A	N/A	Get thing's Movement count.
setMovementCount ()	void	value	int	Set thing's Movement count.

Section 6

Sequence Diagram
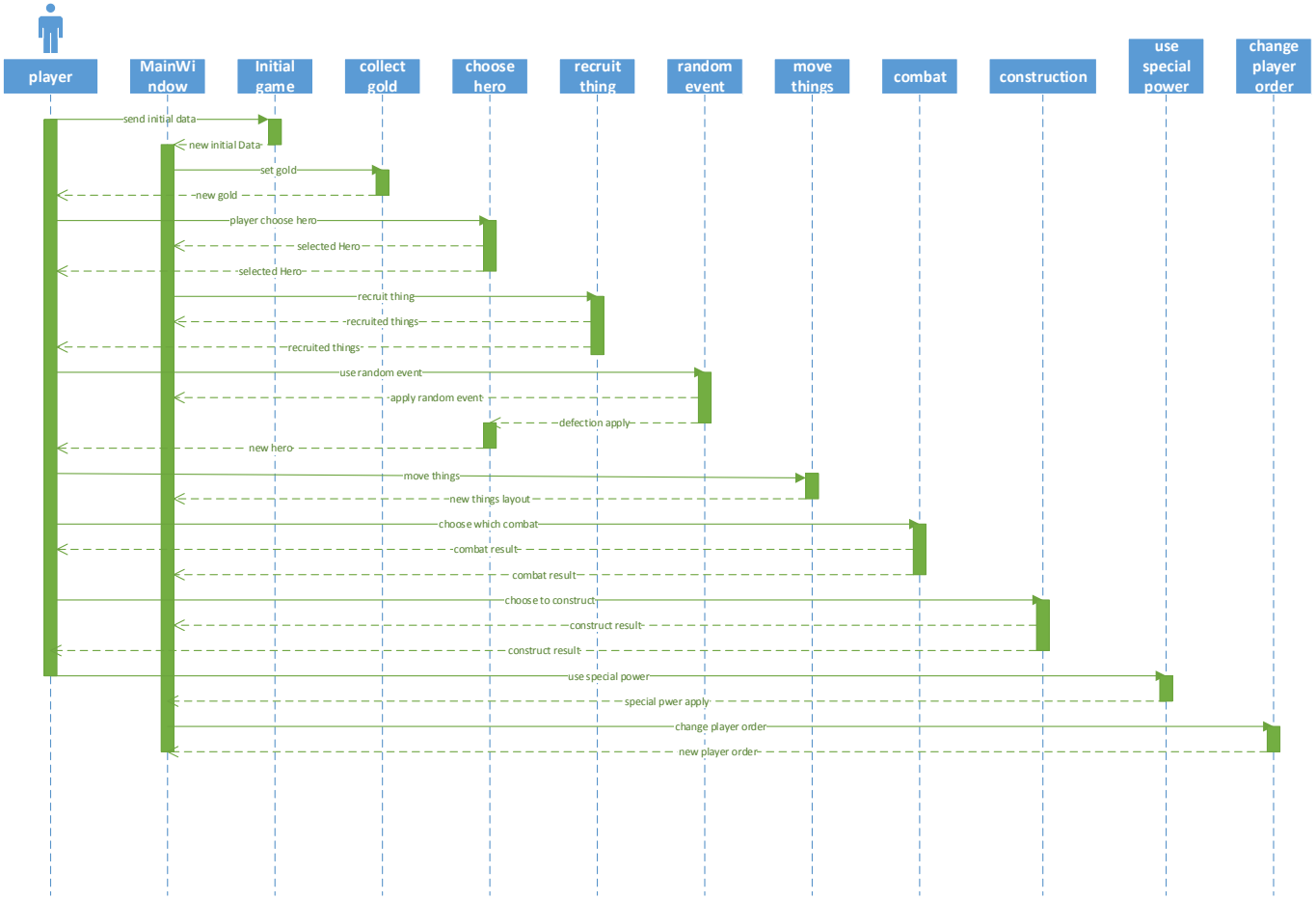
Section 6 Sequence Diagrams