MATHEMATICAL MODELLING: THEORY AND APPLICATIONS

CELLULAR NEURAL NETWORKS: DYNAMICS AND MODELLING

Angela Slavova

Springer Science+Business Media, B.V.

Cellular Neural Networks: Dynamics and Modelling

MATHEMATICAL MODELLING:
Theory and Applications

VOLUME 16

This series is aimed at publishing work dealing with the definition, development and application of fundamental theory and methodology, computational and algorithmic implementations and comprehensive empirical studies in mathematical modelling. Work on new mathematics inspired by the construction of mathematical models, combining theory and experiment and furthering the understanding of the systems being modelled are particularly welcomed.

Manuscripts to be considered for publication lie within the following, non-exhaustive list of areas: mathematical modelling in engineering, industrial mathematics, control theory, operations research, decision theory, economic modelling, mathematical programmering, mathematical system theory, geophysical sciences, climate modelling, environmental processes, mathematical modelling in psychology, political science, sociology and behavioural sciences, mathematical biology, mathematical ecology, image processing, computer vision, artificial intelligence, fuzzy systems, and approximate reasoning, genetic algorithms, neural networks, expert systems, pattern recognition, clustering, chaos and fractals.

Original monographs, comprehensive surveys as well as edited collections will be considered for publication.

Editor:
R. Lowen *(Antwerp, Belgium)*

Editorial Board:
J.-P. Aubin (*Université de Paris IX, France*)
E. Jouini (*Université Paris IX - Dauphine, France*)
G.J. Klir (*New York, U.S.A.*)
P.G. Mezey (*Saskatchewan, Canada*)
F. Pfeiffer (*München, Germany*)
A. Stevens (*Max Planck Institute for Mathematics in the Sciences, Leipzig, Germany*)
H.-J. Zimmerman (*Aachen, Germany*)

Cellular Neural Networks: Dynamics and Modelling

by

Angela Slavova
Institute of Mathematics and Informatics,
Bulgarian Academy of Sciences, Sofia, Bulgaria

Springer-Science+Business Media, B.V.

A C.I.P. Catalogue record for this book is available from the Library of Congress.

ISBN 978-90-481-6254-3 ISBN 978-94-017-0261-4 (eBook)
DOI 10.1007/978-94-017-0261-4

Printed on acid-free paper

All Rights Reserved
© 2003 Springer Science+Business Media Dordrecht
Originally published by Kluwer Academic Publishers in 2003.
Softcover reprint of the hardcover 1st edition 2003
No part of this work may be reproduced, stored in a retrieval system, or transmitted in any form or by any means, electronic, mechanical, photocopying, microfilming, recording or otherwise, without written permission from the Publisher, with the exception of any material supplied specifically for the purpose of being entered and executed on a computer system, for exclusive use by the purchaser of the work.

Contents

	Preface	ix
1	**Basic theory about CNNs**	1
1.1	Introduction to the CNN paradigm	1
1.1.1	Architecture of linear CNNs	4
1.1.2	Architecture of nonlinear and delay CNNs	7
1.1.3	Architecture of multilayer CNNs	10
1.2	Main types of CNN equations	12
1.2.1	State equations	12
1.2.2	Output equations	16
1.2.3	Dynamic range of a CNN	18
1.3	Theorems and results on CNN stability	20
1.3.1	Stability of a linear CNN	22
1.3.2	Stability of a general CNN	33
1.4	Examples	41
2	**Dynamics of nonlinear and delay CNNs**	49
2.1	Nonlinear CNNs	50
2.1.1	Hopfield Neural Networks	50
2.1.2	Nonlinear templates in CNNs	53
2.1.3	Stability of a CNN with nonlinear templates	57
2.1.4	Dynamics and stability of a CNN with output equation of integro-differential type	61
2.1.5	Topological degree analysis of a nonlinear CNN	66
2.2	CNN with delay	74
2.3	Examples	80

3 Hysteresis and chaos in CNNs 85
3.1 CNNs with hystersis in the feedback system 85
3.1.1 Stability of the equilibrium points of a CNN with hysteresis 87
3.1.2 Periodic solutions in the hysteresis region 91
3.2 Nonlinear CNNs with hystersis in the output dynamics 93
3.2.1 Stability and dynamics 94
3.2.2 Example of a two-cell autonomous CNN 100
3.3 Feedback and hysteresis 102
3.3.1 Hyperbolic CNN with hystersis 106
3.4 Control of chaotic CNNs 110
3.4.1 Bifurcation and chaos in CNNs 110
3.4.2 Discrete-continuous control of chaotic CNNs 113
4 CNN modelling in biology, physics and ecology 118
4.1 Modelling PDEs via CNNs 119
4.1.1 One dimensional CNN and PDE 122
4.1.2 Symmetric CNN and PDE 123
4.1.3 Antisymmetric CNN and PDE 125
4.2 CNN model of Sine-Gordon equation 127
4.2.1 CNN modelling 128
4.2.2 Dynamics of the CNN model 129
4.2.3 Stability of the periodic solutions 133
4.2.4 Classical solution of Sine-Gordon equation 135
4.3 CNN model of FitzHugh-Nagumo equation 137
4.3.1 CNN modelling 138
4.3.2 Dynamics of the CNN model 139
4.3.3 Propagation of solitary waves in the CNN model 143
4.4 CNN model of Fisher's equation 148
4.4.1 CNN model of one-dimensional Fisher's equation 148
4.4.2 CNN model of two-dimensional Fisher's equation 150
4.5 CNN model of Brusselator equation 154
4.5.1 Comparison with the classical results 157
4.6 CNN model of Toda Lattice equation 159
4.6.1 Dynamics of the CNN model 161
4.6.2 Solitary waves in the CNN model 163
4.7 Lotka-Volterra equation and its CNN model 166

5	**Appendix A.** Topological degree method	168
6	**Appendix B.** Hysteresis and its models	175
6.1	Hysteresis Phenomena	175
6.1.1	Hysteresis operators	180
6.1.2	Mathematical models of hysteresis operators	182
7	**Appendix C.** Describing function method and its application for analysis of Cellular Neural Networks	189
	References	203
	Index	217

Preface

Conventional digital computation methods have run into a serious speed bottleneck due to their serial nature. To overcome this problem, a new computation model, called Neural Networks, has been proposed, which is based on some aspects of neurobiology and adapted to integrated circuits. The increased availability of computing power has not only made many new applications possible but has also created the desire to perform cognitive tasks which are easily carried out by the human brain. It become obvious that new types of algorithms and/or circuits were necessary to cope with such tasks. Inspiration has been sought from the functioning of the human brain, which led to the artificial neural network approach. One way of looking at neural networks is to consider them to be arrays of nonlinear dynamical systems that interact with each other.

This book deals with one class of locally coupled neural networks, called Cellular Neural Networks (CNNs). CNNs were introduced in 1988 by L.O.Chua and L.Yang [27,28] as a novel class of information processing systems, which posseses some of the key features of neural networks (NNs) and which has important potential applications in such areas as image processing and pattern recognition. Unfortunately, the highly interdisciplinary nature of the research in CNNs makes it very difficult for a newcomer to enter this important and fascinating area of modern science. The purpose of this book is to give an introduction to the mathematical modelling and analysis of networks of neurons from the viewpoint of dynamical systems. It is hoped that this book will provide an introduction to several popular mathematical models of CNNs, as well as to some well-known results and recent developments in the theoretical study of the dynamics of the related mathematical models.

This book can be used as a textbook for senior undergraduate and graduate students in applied mathematics. The level of exposition assumes a basic knowledge of matrix algebra, topology, ordinary and partial differential equations and dynamical systems, and an effort has been made to make the book as self-contained as possible.

The first part of this book (Chapter 1) presents the basic theory of CNNs. A survey of the theorems and results on CNN stability

is given. Some new results of the author concerning the dynamics of nonlinear CNNs are presented in Chapter 2. Fundamental properties of these networks are studied such as dynamical behavior of CNNs with different types of nonlinearity in the feedback circuit, stability, bifurcations and chaos arising in these networks.

In the second part (Chapter 3) of the book we explore how the approximate techniques can be used, and we study their degree of reliability. Several results on this subject in this chapter have been obtained by the author [128,129,131,132,141]. Some new methods for studying such phenomena as hysteresis, bifurcations and chaos are presented. Famous theorems, like the Poincare-Bendixson Theorem valid so far only for two-dimensional systems or the Central Manifold Theorem, have been recently extrapolated or applied to arrays of locally connected first-order differential equations. Another point of interest is the study of their steady-state solutions and their spatial complexity. A systematic and rigorous theory of lattice of differential systems is emerging, to which some results of this book will contribute. The equations governing CNN dynamics are very similar to a spatial discretization of nonlinear partial differential equations, encountered for instance, in reaction-diffusion systems which can model pattern formation mechanisms in chemical reactions or biological growth. This is a new trend in CNN applications and the author proposes, in Chapter 4, several CNN models of equations coming from biology, genetics, neurophysiology, physics, ecology, etc.

Acknowledgements are due to many persons that, in different ways, helped the author in carrying out the research work presented in this book. Especially to Prof. P.Zecca and Prof. P.Nistri for the discussions about harmonic balance method used for investigation of CNN dynamics. Some of the results in this book were presented during the author's visits at University of Florence. The author wishes to thank to Dr.E.Litsyn and Dr.G.Agranovich for the joint work on the discrete- continuous control of chaotic CNNs. Finally I am grateful to my family for the patience and support.

1 Basic theory about CNNs

One of the most interesting aspects of the world is that it can be considered to be made up of patterns. It is characterized by the order of the elements of which it is made rather than by the intrinsic nature of these elements.

Norbert Wiener

1.1 Introduction to the CNN paradigm

Many phenomena with complex patterns and structures are widely observed in the nature. For instance, how does the leopard get its spots, or how does the zebra get its stripes, or how does the fingerprint get its patterns? These phenomena are some manifestations of a multidisciplinary paradigm called emergence or complexity. They share a common unifying principle of dynamic arrays, namely, interconnections of a sufficiently large number of simple dynamic units can exibit extremely complex and self-organizing behaviors.

The invention, called cellular neural network (CNN), is due to L.Chua and L.Yang [27] in 1988. Many complex computational problems can be formulated as well-defined tasks where the signal values are placed on a regular geometric 2-D or 3-D grid, and the direct interactions between signal values are limited within a finite local neighborhood. CNN is an analog dynamic processor array which reflects just this property: the processing elements interact directly within a finite local neighborhood.

For some symmetric templates, the equations governing the CNN dynamics are very similar to a spatial discretization of nonlinear partial differential equation, encountered for instance in reaction-diffusion systems which can model pattern formation mechanisms

in chemical reactions or biological growth. Biological patterns are not only interesting in their own right, but the tendency of biological systems to form spatio-temporal patterns in the brain seems to play a crucial role in recognition.

The concept of CNN is based on some aspects of neurobiology and adapted to integrated circuits. For example, in the brain, the active medium is provided by a sheet-like array of massively interconnected excitable neurons whose energy comes from the burning of glucose with oxygen.In cellular neural networks the active medium is provided by the local interconnections of active cells, whose building blocks include active nonlinear devices (e.g., CMOS transistors) powered by dc batteries.

Cellular Neural Networks have very impressive and promising applications in image processing and pattern recognition. For such applications CNN functions as a two-dimensional filter. However, unlike the conventional two-dimensional digital filters, our cellular neural network uses parallel processing of the input image space and delivers its output in continuous time. This remarkable feature makes it possible to process a large-size image in real time. Moreover, the nearest neighbourhood interactive property of CNN makes them much more amenable to VLSI implementation.

Chip implementation of Cellular Neural Networks differ by their size and by their degree of functionality. Some have a fixed template, and 256 cells [103-108], whereas others are limited to about 30 cells, but are electrically controllable [103-108]. A programmable chip of 1024 cells is currently implemented [37,111]. The programmability and the rapidity of the chip makes the CNN attractive, the nonlinearity, as we will see, allows to obtain a nonlinear signal processing, but these advanteges are counterbalanced by the need of a large silicon area per cell and a quite large power consumption.

Stimulating applications of CNNs have in fact been developed into a wide range of disciplines, ranging from classical and sophisticated image filtering, to biological signal processing solution of nonlinear partial differential equations, physical systems and nonlinear phenomena modelling, generation of nonlinear and chaotic dynamics, associative memories, neurophysiology, robotics, etc. [15,21,64, 92,116,117]. Recently new spatio-temporal based processing strategies able to mimic processing in the retina have been constructed

[8,30,115]. Similarly to a retina, the cellular processor array consists of a large number of identical analog processing elements. Like in the retina, these elements have local (usually nearest neighbour) interconnections, to make the implementation feasible. The interconnection weight pattern in space invariance means that the network has only a few free parameters. The processor can process either grayscale or binary valued images. Based on the structure and funcionality of the processing elements, and the interconnection and weighting, a large number of various cellular network types can be implemented.

Due to the fact that CNNs can constitute analog primitives to represent complex dynamics in space-time a number of mechatronic structures were developed [2,3,4,5,92]. Their locomation was driven by CNN based circuits, like those able to drive bioinspired walking machines, endowed with a large number of joints.

After the introduction of the CNN paradigm, CNN Technology got a boost when the analogic cellular computer architecture, the CNN Universal Machine has been invented [111,116,120]. The most successful chips embedded in a computational infrastucture provided the framework for analogic cellular software development. The industrial applications rely on the available **Aladdin** system, for which more information can be found on the web site:
www.analogic-computers.com.

1.1.1 Architecture of linear CNNs

Since its invention, the investigation of Cellular Neural Networks (CNNs) has envolved to cover a very broad class of problems and frameworks. Many researchers have made significant contributions to the study of CNN phenomena using different mathematical tools [25,26,27,29,103-108,138]. CNN is simply an analogue dynamic processor array, made of cells, which contain linear capacitors, linear resistors, linear and nonlinear controlled sources. Let us consider a two-dimensional grid with 3×3 neighborhood system as it is shown in Fig.1.

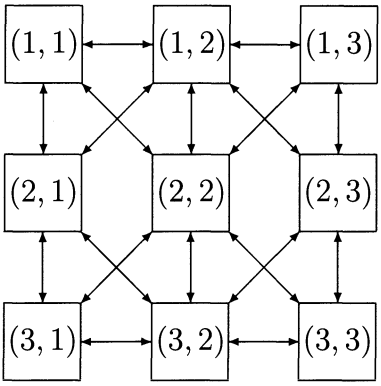

Fig.1. CNN with 3×3 neighbourhood system.

The squares are the circuit units - cells $C(i, j)$, and the links between the cells indicate that there are interactions between linked cells. One of the key features of a CNN is that the individual cells are nonlinear dynamical systems, but that the coupling between them is linear. Roughly speaking, one could say that these arrays are nonlinear but have a linear spatial structure, which makes the use of techniques for their investigation common in engineering or physics attractive.

A typical example of a cell $C(i, j)$ of a CNN is shown in Fig.2, where v_{xij}, v_{yij}, v_{uij} denote the state, output, and input voltages, respectively. For the state voltage v_{xij} it is assumed its initial condition to have a magnitude less than or equal to 1. The input vol-

tage v_{uij} is assumed to be a constant with magnitude less than or equal to 1. Each cell $C(i,j)$ contains one independent voltage source E_{ij}, one independent current source I, one linear capacitor C, two linear resistors R_x and R_y. $I_{xy}(i,j;k,l)$ and $I_{xu}(i,j;k,l)$ are linear voltage controlled current sources with the characteristics $I_{xy}(i,j;k,l) = A_{ij,kl}v_{ykl}$ and $I_{xu}(i,j;k,l) = B_{ij,kl}v_{ukl}$ for all $C(k,l) \in N_r(i,j)$. The only nonlinear element in each cell is a piecewise-linear voltage-controlled current source $I_{yx} = (1/R_y)f(v_{xij})$. The coupling coefficients $A_{ij,kl}$ and $B_{ij,kl}$ are called feedback template coefficient and control template coefficient respectively. We assume that all the cells in the CNN have equal parameters and hence equal templates (space invariance). The term, cloning templates, is used to emphasize this property of invariance. This means that the set of $2.(2r+1)^2+1$ real numbers $A_{ij,kl}$, $B_{ij,kl}$ comletely determine the behavior of an arbitrary large two-dimensional CNN. The templates can be expressed in a compact form by means of tables or matrices.

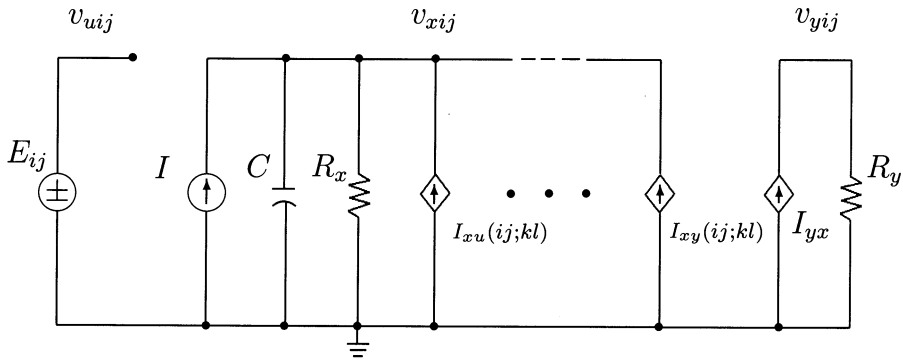

Fig.2. A simple cell of the linear CNN.

We shall give two general definitions of a CNN which follows the original one [24,27]:

Definition 1.1 *The CNN is a*

a). 2-, 3-, or n- dimensional array of

b). mainly identical dynamical systems, called cells, which satisfies two properties:

c). most interactions are local within a finite radius r, and

d). all state variables are continuous valued signals.

Definition 1.2 *A cellular neural network is a high dimensional dynamic nonlinear circuit composed by locally coupled, spatially recurrent circuit units called cells. The resulting net may have any architecture, including rectangular, hexagonal, toroidal, spherical and so on. An $M \times M$ CNN is defined mathematically by four specifications:*

1). CNN cell dynamics;

2). CNN synaptic law which represents the interactions (spatial coupling) within the neighbor cells;

3). Boundary conditions;

4). Initial conditions.

Remark 1.1 The space variable is always discretized and the time variable t may be continuous or discrete.

Remark 1.2 The interconnection between cells is usualy represented by the cloning template which may be a nonlinear function of state x, output y, and input u of each cell $C(i,j)$, within the neighborhood N_r of radius r [27]:

$$N_r(i,j) = \{C(k,l)|max\{|k-i|, |l-j|\} \leq r, 1 \leq k \leq M, 1 \leq l \leq M\}.$$

Moreover, the cloning template has geometrical meaning which we can be exploited to provide the geometric insights and simple design methods.

1.1.2 Architecture of nonlinear and delay CNNs

The analoque processor element, the cell, of nonlinear and delay CNN differs from that of the original cell (Fig.2) basically in the controled sources I_{xy} and I_{xu} only. Namely, instead of the two linear controlled sources defined by $A_{ij,kl}v_{ykl}$ and $B_{ij,kl}v_{ukl}$, nonlinear and delayed controlled sources are allowed. They are defined by $\hat{A}_{ij,kl}(v_{ykl}, v_{yij})+A^{\tau}_{ij,kl}v_{ykl}(t-\tau)$ and $\hat{B}_{ij,kl}(v_{ukl}, v_{uij})+B^{\tau}_{ij,kl}v_{ukl}(t-\tau)$, where $\tau = \tau_{kl}$. That is, instead of having a linear VCCS (voltage-controlled current source) in the A and B cloning templates, we now have a nonlinear and/or delay-type VCCS. The structure of the nonlinearity in the templates is also important: it is a function of at most two variables, namely output voltage of cell $C(i,j)$ and that of a neighbor $C(k,l)$.

Motivated by neurobiological structures, it is worthwhile to introduce the possiblity of having more than one type of processor and/or more than one neighbourhood size in a CNN. We can call such a CNN a non-uniform processor CNN or a multiple neighbourhood size CNN respectively.

A non-uniform processor CNN (NUP-CNN) is shown in Fig.3. The two types of processors are denoted by empty and black boxes. NUP-CNN architectures contain more than one processor type placed on a regular grid where the structures of all the interprocessor connections are space-invariant.

A multiple-neighbourhood-size CNN (MNS-CNN) with two sizes of neighbourhood is shown in Fig.4. All the processors are the same. However, grid A (on layer A) is a fine grid with neighbourhood size $r = 1$, while grid B on the next layer (dashed line) is a course grid for the processors with neighbourhood size $r = 3$ (connected to layer A). On layer B connections to one processor only are shown. MNS-CNN architectures contain layers with different grids and neighbourhood size. They reflect some characteristic structures found in living visual systems. A special case of the MNS-CNN with two sizes of neighbourhoods contains only one processor on layer B. In this case the connections to this processor are global lines from each processor.

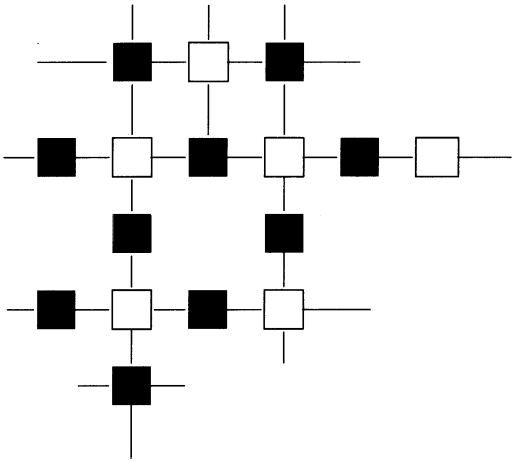

Fig. 3. Non-uniform processor CNN.

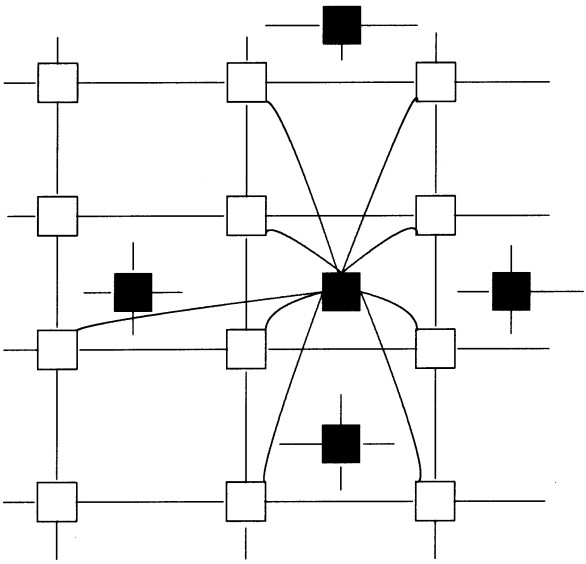

Fig.4. Multiple-neighbourhood size CNN.

With regard to the information-processing or computing function of the CNN array, it has two input ports and one output port per cell; namely, besides the generic input $E_{ij}(t) = v_{uij}(t)$ the initial value of the state, i.e. $v_{xij}(0)$, can also be used as an input. The output $v_{yij}(t)$ is defined as either the DC steady state $v_{yij}(\infty)$ or as an snapshot at a given finite time instant $t = T$, i.e. $v_{yij}(T)$. In the former case the successive inputs can be applied in a sampled data mode, allowing a sufficient settling time to elapse between the samples. It is clear that the most direct application area of the CNN is in image processing (where the light intensity of the pixel, I_{ij}, is the input). However, other applications such as solving special types of partial differential equations are also potentially important. Even the two input possibilities can be combined, e.g. for processing successive images of a motion picture. Using A^τ and B^τ delay-type templates, various forms of successive (moving) images can be generated within the CNN.

1.1.3 Architecture of multilayer CNNs

In the single layer CNN, as we could see in the previous sections, each cell has one state variable only. In a multilayer cellular neural network instead of one state variable there may be several state variables in each cell. The concept of multilayering emphasizes the interactions of the state variables on the same layer. One can imagine a multylayer CNN to be composed of several single layers arrays, stacked one above the other, in which a full layer-to- layer interaction is possible.

Since there are several state variables in a cell circuit, one can choose multiple dynamic rules concurently for the different state variables. This property makes the network extremely flexible and allows us to deal with more complicated image processing problems.

In addition to using multiple dynamic rules as mentioned above, we can choose different time constants for different state variables of the cell circuits. Therefore we can obtain a set of differential and algebraic equations as a limiting case. This property gives us even more flexibility in the design of cellular neural networks for practical problems.

A two-dimensional three-layer CNN is shown in Fig.5. The layers Π_1^2, Π_2^2 and Π_3^2 are 3×3, 4×3 and 3×5 arrays of cells respectively. The size (M_j) and the connection topology may in general differ from one layer to another. Moreover, a layer may be a rectangular array of cells, i.e. $M_1 \neq M_2$. For simplicity we will assume that the size of each layer is the same, i.e. $M_j^k = M_j$ for all $j \in \{1, 2, \ldots, n\}$ and $k \in \{1, 2, \ldots, m\}$, where the superscripts k index the layers. Note that a typical cell in Fig.5 is connected not only to its nearest neighbours in the same layer but also to the nearest neighbours in the upper (except the uppermost layer) and lower (except the lowermost layer) layers. For the sake of generality we can allow the "size" of the neighbourhhod in each layer to be arbitrary, including the entire layer. Moreover, in the most general case each cell of each layer may be connected to the cells in more than two layers. As known in the literature [59] the extreme case of fully connected network can be implemented efficiently in integrated circuits with a special kind of chip architecture where the cells are arranged

along the edges of the chip. On the other hand, optics is especially suitable for connecting the layers and for providing the space- invariant connectivity, and it can also be used for implementing a three-dimensional network [59]. More complex interconnection patterns seem to be feasible by technological developments in optics.

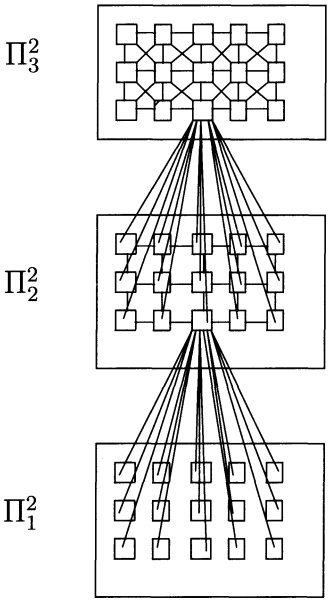

Fig. 5. Two-dimensional three-layer CNN.

1.2 Main types of CNN equations

In this section we shall formulate the canonical equations describing the CNN analogue processor. We can define a CNN mathematically as follows.

1.2.1 State equations

Suppose for simplicity that the processing elements of a CNN are arranged on a 2-dimensional (2-D) grid (Fig.1). Then the dynamics of a CNN, in general, can be described by:

$$\begin{aligned} \dot{x}_{ij}(t) &= -x_{ij}(t) + \sum_{C(k,l)\in N_r(i,j)} \tilde{A}_{ij,kl}(y_{kl}(t), y_{ij}(t)) + \\ &+ \sum_{C(k,l)\in N_r(i,j)} \tilde{B}_{ij,kl}(u_{kl}, u_{ij}) + I_{ij}, \end{aligned} \tag{1.1}$$

$$y_{ij}(t) = f(x_{ij}), \tag{1.2}$$

$$1 \le i \le M, 1 \le j \le M,$$

x_{ij}, y_{ij}, u_{ij} refer to the state, output and input voltage (i.e. v_{xij}, v_{yij}, v_{uij} as in section 1.1.1) of a cell $C(i,j)$; $C(i,j)$ refers to a grid point associated with a cell on the 2-D grid, $C(k,l) \in N_r(i,j)$ is a grid point (cell) in the neighborhood within a radius r of the cell $C(i,j)$, I_{ij} is an independent current sourse. $\tilde{A}$ and $\tilde{B}$ are nonlinear cloning templates, which specify the interactions between each cell and all its neighbor cells in terms of their input, state, and output variables. Moreover, as we mentioned above the cloning template has geometrical meanings which can be exploited to provide us with geometric insights and simpler design methods.

In [29,51] delay template elements contribute two additional terms:

$$\sum_{C(k,l)\in N_r(i,j)} A^{\tau}_{ij,kl} y_{kl}(t-\tau) + \sum_{C(k,l)\in N_r(i,j)} B^{\tau}_{ij,kl} u_{kl}(t-\tau). \tag{1.3}$$

In the case of single variable $\tilde{A}$ and $\tilde{B}$, the linear (space-invariant) cloning templates are represented by the following additive terms [27]:

$$\sum_{C(k,l)\in N_r(i,j)} A_{ij,kl}y_{kl}(t) + \sum_{C(k,l)\in N_r(i,j)} B_{ij,kl}u_{kl}(t). \tag{1.4}$$

In this case, when the template is space invariant, each cell is described by simple identical cloning templates defined by two real matrices A and B. Continuous input(output) signal values are presented by values in the range [-1,1] or [0,1]. For instance the following two square matrices are used for a CNN with $r = 1$ (Fig.1):

$$A = \begin{pmatrix} A(i,j;i-1,j-1) & A(i,j;i-1,j) & A(i,j;i-1,j+1) \\ A(i,j;i,j-1) & A(i,j;i,j) & A(i,j;i,j+1) \\ A(i,j;i+1,j-1) & A(i,j;i+1,j) & A(i,j;i+1,j+1) \end{pmatrix}$$

$$B = \begin{pmatrix} B(i,j;i-1,j-1) & B(i,j;i-1,j) & B(i,j;i-1,j+1) \\ B(i,j;i,j-1) & B(i,j;i,j) & B(i,j;i,j+1) \\ B(i,j;i+1,j-1) & B(i,j;i+1,j) & B(i,j;i+1,j+1) \end{pmatrix}$$

This form enables us to rewrite state equation (in linear case) in a more compact form by means of the two-dimensional convolution operator defined below.

Definition 1.3 *For any cloning template A which defines the dynamic rule of the cell circuit, we define the convolution operator $*$ by*

$$A * z_{ij} = \sum_{C(k,l)\in N_r(i,j)} A(k-i, l-j)z_{kl}, \tag{1.5}$$

where $A(m,n)$ denotes the entry in the mth row and nth column of the cloning template, $m = -1.0, 1$, and $n = -1, 0, 1$, respectively.

In other words in a linear CNN we have the following state equation:

$$\dot{x}_{ij}(t) = -x_{ij}(t) + A * y_{ij}(t) + B * u_{ij} + I_{ij} \tag{1.6}$$

The symmetry of the feedback cloning template A is needed for proving the complete stability of a CNN.

Definition 1.4 (Symmetry property) *A template is symmetric if:*

$$A_{ij,kl} = A_{kl,ij}, 1 \leq i, k \leq M, 1 \leq j, l \leq M \tag{1.7}$$

For multilayer CNNs, the cell dynamic equations can be expressed in the compact vector form by (1.6):

$$\dot{x}_{ij}(t) = -x_{ij}(t) + A * y_{ij}(t) + B * u_{ij} + I_{ij}, \tag{1.8}$$

where A and B are block triangular matrices of the following form:

$$A = \begin{pmatrix} A_{11} & 0 & 0 & 0 & 0 \\ . & . & 0 & & 0 \\ . & & . & 0 & 0 \\ . & & & . & 0 \\ A_{m1} & . & . & . & A_{mm} \end{pmatrix},$$

$$B = \begin{pmatrix} B_{11} & 0 & 0 & 0 & 0 \\ . & . & 0 & & 0 \\ . & & . & 0 & 0 \\ . & & & . & 0 \\ B_{m1} & . & . & . & B_{mm} \end{pmatrix},$$

In [127] the templates for nolinear CNN are considered to be in the following more general form:

$$\tilde{A} = \begin{bmatrix} 0 & p_1 & 0 \\ p_2 & 2 & p_2 \\ 0 & p_1 & 0 \end{bmatrix}, \quad \tilde{B} = \begin{bmatrix} 0 & 0 & 0 \\ p_3 & 1 & p_3 \\ 0 & 0 & 0 \end{bmatrix},$$

with $p_1 = c_1 y_{kl} y_{ij}$, $p_2 = c_2[exp(y_{kl} - 1]$, $p_3 = c_3(u_{kl} - u_{ij})$ in order to assure the stability of the nonlinear CNN. Moreover, $\tilde{A}$ and $\tilde{B}$ are called in [27] feedback and control operators.

Now in terms of definition 1.2 we can make a generalization of the above dynamical systems describing CNNs. For a general CNN whose cells are made of time-invariant circuit elements, each cell $C(i, j)$ is characterized by its CNN cell dynamics :

$$\dot{x}_{ij} = -g(x_{ij}, u_{ij}, I^s_{ij}), \tag{1.9}$$

where $x_{ij} \in \mathbf{R}^m$, u_{ij} is usualy a scalar. In most cases, the interactions (spatial coupling) with the neighbor cell $C(i+k, j+l)$ are specified by a CNN synaptic law:

$$\begin{aligned} I_{ij}^s &= A_{ij,kl} x_{i+k,j+l} + \tilde{A}_{ij,kl} * f_{kl}(x_{ij}, x_{i+k,j+l}) + \\ &\quad + \tilde{B}_{ij,kl} * u_{i+k,j+l}(t). \end{aligned} \tag{1.10}$$

The first term $A_{ij,kl} x_{i+k,j+l}$ of (1.10) is simply a linear feedback of the states of the neighbourhood nodes. The second term provides an arbitrary nonlinear coupling, and the third term accounts for the contributions from the external inputs of each neighbour cell that is located in the N_r neighbourhood.

The following three types of boundary conditions are typical for a CNN [20]:

1). Fixed (Dirichlet) Boundary Condition:

$$\begin{aligned} x_0 &\equiv v_0 = E_1, \\ x_{M+1} &\equiv v_{M+1} = E_2. \end{aligned} \tag{1.11}$$

Here CNN is simply clamped at its ends to some fixed potentials E_1, E_2 (say at ground potentials $E_1 = E_2 = 0$), v_0 is the voltage of the left-most node, v_{M+1} is the voltage of the right-most node.

2). Zero-Flux (Neumann) Boundary Conditions:

$$\begin{aligned} x_0 &\equiv v_0 = v_1, \\ x_{M+1} &\equiv v_{M+1} = v_M \end{aligned} \tag{1.12}$$

3). Periodic (Ring) Boundary Conditions:

$$\begin{aligned} x_0 &\equiv v_0 = v_M, \\ x_{M+1} &\equiv v_{M+1} = v_1. \end{aligned} \tag{1.13}$$

1.2.2 Output equations

As we have seen above the state of the cell $C(i,j)$ at time t is denoted by $x_{ij}(t)$, while the output at time t is

$$y_{ij}(t) = f(x_{ij}(t)).$$

Some useful output functions f are:

- piecewise-linear sigmoid [1] function [7]:

$$f(x_{ij}) = \frac{1}{2}(|x_{ij}+1| - |x_{ij}-1|), \tag{1.14}$$

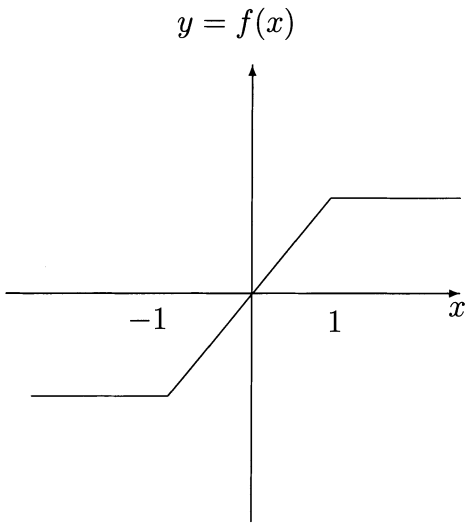

Fig.6. Piecewise-linear output function.

- piecewise-linear sigmoid function with [0,1] output [127]:

$$f(x_{ij}) = \begin{cases} 0, & x_{ij} < 1 \\ x_{ij}, & 0 \le x_{ij} \le 1 \\ 1, & x_{ij} > 1 \end{cases}, \tag{1.15}$$

[1]Sigmoid function has the following properties $y_{ij} = f(x_{ij})$, i.e. $|f(x_{ij})| \le c = const.$, and $(df(x_{ij})/dx_{ij}) \ge 0$.

- nonlinear function [59]:

$$f(x_{ij}) = \frac{2V}{\pi} tan^{-1}(\frac{\pi}{2V} x_{ij}), \tag{1.16}$$

etc.

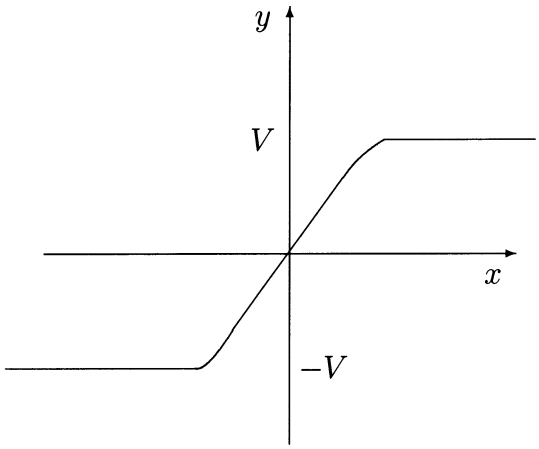

Fig.7. Nonlinear output function.

In [118,127] more general output function with its own dynamics is proposed:

$$\dot{y}_{ij} = -y_{ij} + f(x_{ij}), \tag{1.17}$$

as a higher order dinamical system.

Additionally we assume that the initial state is given by $x_{ij}(0)$, and its range and the range of the input $u_{ij}(t)$ are restrited by the constraint conditions. Without loss of generality we assume [27]:

$$|u_{ij}(t)| \leq 1, \;\; |x_{ij}(0)| \leq 1. \tag{1.18}$$

If $u_{ij}(t)$ is constant (which is the standard case), the CNN is said to have constant input, otherwise it has time-variant input.

1.2.3 Dynamic range of a CNN

First of all, we shall give an estimate for the dynamic range of the CNN defined above by the dynamic system (1.1), (1.14).

Proposition 1.1 *For a CNN described by the state equation (1.1) with bounded non-linear cloning templates and the output (1.14), all states x_{ij} are bounded for all $t > 0$ and the bound x_{max} can be computed by the following formula:*

$$x_{max} = 1 + max_{1 \le i \le M, 1 \le j \le M}[\sum_{C(k,l) \in N_r(i,j)} (max_t|\tilde{A}| + max_u|\tilde{B}|)] \tag{1.19}$$

Proof: Let us consider the state equation of (1.1) in the form:

$$\dot{x}_{ij} = -x_{ij}(t) + F_{ijkl}(t) + G_{ijkl}(u), \tag{1.20}$$

$$1 \le i \le M\,,\, 1 \le j \le M,$$

where

$$F_{ijkl}(t) = \sum_{C(k,l) \in N_r(i,j)} \tilde{A}(y_{kl}(t), y_{ij}(t)),$$

$$G_{ijkl}(u) = \sum_{C(k,l) \in N_r(i,j)} \tilde{B}(u_{kl}(t), u_{ij}(t)),$$

Equation (1.20) is a first-order ordinary differential equation and its solution is [60]:

$$\begin{aligned} x_{ij}(t) &= x_{ij}(0)e^{-t} + \int_0^t e^{-(t-\tau)}[F_{ijkl}(\tau) + \\ &\quad + G_{ijkl}(u)]\, d\tau \end{aligned} \tag{1.21}$$

Therefore,

$$|x_{ij}(t)| \le |x_{ij}(0)|e^{-t} + \int_0^t e^{-(t-\tau)}[|F_{ijkl}| +$$

$$+ |G_{ijkl}(u)|]\, d\tau \le |x_{ij}(0)|e^{-t} +$$

$$+ [F + G] \int_0^t e^{-(t-\tau)}\, d\tau \le$$

$$\leq |x_{ij}(0)| + [F + G],$$

where

$$F \equiv max_t|F_{ijkl}(t)| \leq \sum_{C(k,l)\in N_r(i,j)} max_t|\tilde{A}(y_{kl}, y_{ij}|,$$

$$G \equiv max_u|G_{ijkl}| \leq \sum_{C(k,l)\in N_r(i,j)} max_u|\tilde{B}(u_{kl}, u_{ij})|.$$

From the conditions (1.18) and $|y_{ij}(0)| \leq 1$, it follows that

$$|x_{ij}(t)| \leq 1 + [\sum_{C(k,l)\in N_r(i,j)} (max_t|\tilde{A}| + max_u|\tilde{B}|)], \tag{1.22}$$

$$1 \leq i, k \leq M\ ,\ 1 \leq j, l \leq M.$$

Now let

$$x_{max} = max_{(ij)}\{1 + \sum_{C(k,l)\in N_r(i,j)} (max_t|\tilde{A}| + max_u|\tilde{B}|)\}. \tag{1.23}$$

Then we have

$$max_t|x_{ij}| \leq x_{max}$$

for all $1 \leq i, k \leq M$, $1 \leq j, l \leq M$.

Remark 1.3 The main difference between CNNs and neural networks (NNs) is that a CNN has practical dynamic range, which can be calculated by the formula (1.19). Whereas, general NN often suffers from a severe dynamic range restrictions in the circuit implementation stage.

Remark 1.4 In the case of linear cloning templates (1.4) the following formula for the dynamic range is valid [27]:

$$x_{max} = 1 + |I_{ij}| + max_{1\leq i\leq M, 1\leq j\leq M}[\sum_{C(k,l)\in N_r(i,j)} (|A_{ij,kl}| + |B_{ij,kl}|)].$$

1.3 Theorems and results on CNN stability

The most important application of CNNs is in image processing [28]. In the one dimensional case, there are two modes of information propagation existing in the array: global propagation or local diffusion, meaning that two distant cells do or do not influence each other, and determined the corresponding range of coupling parameters.

The basic function of a CNN for image processing is to map or transform an input image into a corresponding output image. This means that our CNN must always converge to a constant steady state. How can we guarantee the convergence of CNNs? One of the most effective techniques for analyzing the convergence properties of dynamic nonlinear circuits is Lyapunov's method.

When all trajectories of a CNN converge toward equilibrium points, an idea borrowed from physics and signal processing is to analyze them in the spatial frequency domain. The array is viewed as a spatial digital filter, the coupling template parameters being the coefficients of a spatial infinite impulse response filter. Until the nonlinearity begins to modify significanty the states, this analysis is very accurate. Afterwords, it will depend on the type of template parameters.

The development of the CNNs mathematical model nas been influenced by the following three reasons: 1). Neurobiological studies have demonstrated that neurons exhibit complicated dynamical behaviours, for example, a special kind of CNN is proposed as a model simulating pattern recognition by the olfactory bulb [158], The computer simulation of the dynamics of the proposed model confirms many phenomena, which are observed in the biological experiments. 2). The set of differential equations describing a CNN defines a rather general class of nonlinear equations. Moreover, most of the equations govering nonlinear circuits and systems fall into this important class [95,121] and therefore, CNNs become a good candidate for modelling analogue hardware implementations of neural networks. Many implementations [13,84,90] which exhibit high-order dynamical effects, propagation delays and variations in the cell structure and its parameters from cell to cell are sub-

classes of CNNs. 3).The CNNs cover many important neural network architectures as, for example, Hopfield networks [70] and offer a promising architecture for biological nervous systems as well as for electronic neural networks.

In the design of a dynamical neural networks it is interesting to study the stability properties of the network. The majority of stability studies in CNN [22,25,27,29,112] have been devoted to finding the conditions which ensure that each trajectory of the network converges to an equilibrium point depending on the initial conditions. In our analysis the external inputs are set to some constant values, the input data are fed via initial conditions and the outputs take their steady state values at an equilibrium point which depends on the initial condition. Such CNN have applications in many tasks, for instance, in pattern recognition and image processing [28]. The global asymptotic stability results are useful for the design of such CNNs where the output reaches its steady state value depending only on the given constant input and not on the initial state.

Low-dimensional nonlinear systems are very hard to analyze, so the analysis of coupled dynamical systems, which are high-dimensional nonlinear systems must be intractable. However, when their structure exibits a high regularity, a number of exact results valid for any dimension can be obtained. Some famous theorems, like Poincaré-Bendixson Theoem valid so far only for two-dimensional systems or the Center Manifold Theorem, have been recently applied to arrays of locally connected first-order differential equations [14,91]. Another point of interest is the study of their steady-state solutions and their spatial complexity [89,90]. We shall contribute next to a systematics and rigorous analysis of lattice of differential systems describing CNNs.

1.3.1 Stability of a linear CNN

In [47] a special case of Lyapunov function was given for the dynamics (1.9) of the form $g = -c_i x_i + \sum_j T_{ij} g(x_j)$, where $[T_{ij}]$ is a constant symmetric matrix and $g' \geq 0$. The constructed Lyapunov function:

$$V = -\frac{1}{2}\sum_i c_i x_i^2 + \frac{1}{2}\sum_{jk} T_{jk} g(x_j) g(x_k), \tag{1.24}$$

in Hopfield's electrical circuit interpretation is exactly the energy.

In [27,28] the following energy function was defined for CNN with linear cloning templates (1.4):

$$\begin{aligned} E(t) &= -\frac{1}{2}\sum_{ij}\sum_{kl} A_{ij,kl} y_{ij}(t) y_{kl}(t) + \\ &+ \frac{1}{2}\sum_{ij} y_{ij}^2(t) - \sum_{ij}\sum_{kl} B_{ij,kl} y_{ij}(t) u_{kl} - \sum_{ij} I y_{ij}(t). \end{aligned} \tag{1.25}$$

Then, it is proved that $E(t)$ is bounded and it is a monotone decreasing function, hence $E(t)$ converges to a limit and its derivative converges to 0:

$$lim_{t\to\infty} E(t) = const., \quad lim_{t\to\infty} \frac{dE(t)}{dt} = 0. \tag{1.26}$$

Therefore, the following theorem is true [27]:

Theorem 1.1 *After the transient of a CNN has decayed to zero, we always obtain a constant dc output. In other words, we have:*

$$lim_{t\to\infty} y_{ij}(t) = const., \; 1 \leq i \leq M, 1 \leq j \leq M. \tag{1.27}$$

Such kind of stability is refered to us as a **complete stability**, in the sense that every trajectory tends to an equilibrium point. This result is proved for any sigmoid function $y_{ij} = f(x_{ij})$, i.e. $|f(x_{ij})| \leq c = const.$, and $(df(x_{ij})/dx_{ij}) \geq 0$ [27].

Let us consider linear CNN with the state equation after having ordered the cells in some way (e.g. by columns or by rows):

$$\dot{x}(t) = -x(t) + Ay(t) + Bu(t) + I, \tag{1.28}$$

where $x \in R^{M \times M}$ is the state vector, $u(t)$ is the input vector, I is a constant vector, representing the bias current, $y(t) \in R^{M \times M}$ is the output vector depending on x of the form (1.14), A and B are two cloning templates - feedback and control. We shall suppose that the inputs are constant, so that the CNN described by (1.28) is an autonomous system.

Definition 1.5 *An autonomous system, described by the state equation:*

$$\dot{x} = f(x) \tag{1.29}$$

$x \in R^n$, $f : R^n \rightarrow R^n$, is said to be completely stable if for each initial condition $x_0 \in R^n$:

$$lim_{t \rightarrow +\infty} x(t, x_0) = const \tag{1.30}$$

where $x(t, x_0)$ is the trajectory starting from x_0.

To study the stability properties of (1.28) we set $u = 0$ and $I = 0$. The following theorem hold [51]:

Theorem 1.2 *A sufficient condition for the complete stability of a CNN, described by (1.28) ($u = 0$, $I = 0$), is that there exists a positive diagonal matrix D, such that the product DA is a symmetric matrix.*

Proof: If $A = Id$, (Id- identity matrix) the stability has been proved in [27]. In other case we introduce the following Lyapunov function:

$$V(t) = y^{'}(t) P y(t) \tag{1.31}$$

where $P = D(A - Id)$ is a symmetric matrix. The derivative of the output function $y(t)$ is:

$$\dot{y}(t) = N(x)\dot{x}(t),$$

where $N(x) = diag\{n_h(x_h)\}$, with

$$n_h = \begin{cases} 1 & \text{iff} \quad |x_h| < 1 \\ 0 & \text{iff} \quad |x_h| > 1 \end{cases} .$$

Then the time derivative of the Lyapunov function (1.31) is:

$$\dot{V}(t) = [N(x)(-x + Ay)]' Py + y' PN(x)(-x + Ay)$$

Since $N(x)x = N(x)y$, we have:

$$\dot{V}(t) = y' H' N(x) Py + y' PN(x) Hy,$$

$H = A - Id$.

By substituting $P = DH$, we obtain:

$$\dot{V}(t) = y' H' N(x) DHy + y' H' DN(x) Hy$$

$$= y' H' N(x) DN(x) Hy + y' H' N(x) DN(x) Hy$$

$$= 2\dot{y}' D\dot{y}.$$

The output function $y(t)$ satisfies the Lipschitz condition:

$$|y(t_2) - y(t_1)| = |f(x(t_2)) - f(x(t_1))| \leq |x(t_2) - x(t_1)|$$

$$\leq c|t_2 - t_1|$$

where the last inequality derives from the fact that the state $x(t)$ is a C^1 function and that $\dot{x}(t)$ is bounded. Now $V(t)$ can be written as:

$$V(t) = \tilde{V}(y(t)) = \sum_i \sum_j p_{ij} y_i(t) y_j(t)$$

where $\tilde{V}(y)$ with respect to y is a C^∞ function. Since $y(t)$ satisfies Lipschitz condition there exist suitable constants c_1 and c_2 such that:

$$|V(t_2) - V(t_1)| = |\tilde{V}(y(t_2)) - \tilde{V}(y(t_1))|$$

$$\leq c_1 |y(t_2) - y(t_1)| \leq c_2 |t_2 - t_1|.$$

Therefore $V(t)$ satisfies Lipschitz condition too, so it is absolutely continuous [38]. Due to this fact the following inequality holds:

$$V(t) = V(0) + \int_0^t \dot{V}(t')dt' = V(0) +$$

$$+2 \int_0^t \dot{y}'(t') D\dot{y}(t')dt'.$$

Since D is positive, $V(t)$ is a monotone nondecreasing function and is also bounded, this is sufficient to state that $lim_{t\to\infty}V(t)$ exists. Moreover, there exists a positive real constant γ such that

$$V(t) \geq V(0) + \gamma \int_0^t |\dot{y}(t')|^2 dt'.$$

Thus as $t \to +\infty$, $\int_0^t |\dot{y}(t')|^2 dt'$ is bounded, i.e. $\dot{y}(.) \in L^2(0,\infty)$. We shall show that $\dot{x}(.) \in L^2(0,\infty)$. We have:

$$x(t) = exp(-t)x(0) + \int_0^t exp[-(t-s)]Ay(s)ds$$

After some calculations we obtain:

$$\dot{x}(t) = exp(-t)[Ay(0) - x(0)] + \int_0^t exp[-(t-s)]A\dot{y}(\tau)d\tau.$$

It is easy to verify that:

$$exp(-t)[Ay(0) - x(0)] \in L^1(0,\infty)$$

and

$$\int_0^t exp[-(t-s)]A\dot{y}(\tau)d\tau \in L^2(0,\infty)$$

because the last integral is the convolution between $exp(-t)$ belonging to $L^1(0,\infty)$ and $A\dot{y}(t)$ belonging to $L^2(0,\infty)$. Therefore $\dot{x}(.) \in L^2(0,\infty)$.

Our goal is to prove $lim_{t\to\infty}\dot{x}(t) = 0$, i.e. to prove the complete stability of system (1.28). In order to show that, we shall suppose that the above limit is not zero and we shall show that this leads to a contradiction.

If $lim_{t\to\infty}\dot{x}(t) \neq 0$ there would exist a divergent sequence $\{\tau_n\}$, a positive real number α and one integer N, such that $\forall n > N |\dot{x}(\tau_n)| \geq \alpha$. Since $\dot{x}(.) \in L^2(0,\infty)$, for every $0 < \varepsilon < \alpha$ there exists a sequence σ_n such that: $|\dot{x}(\tau_n - \sigma_n)| = \varepsilon$ and $\varepsilon \leq |\dot{x}(.)| \leq \alpha$ for $t \in (\tau_n - \sigma_n, \tau_n)$.

Therefore there exists a suitable positive real number M such that:

$$\varepsilon^2 \sum_n \sigma_n \leq \sum_n \int_{\tau_n - \sigma_n}^{\tau_n} |\dot{x}(\tau)|^2 d\tau \leq \int_0^\infty |\dot{x}(\tau)|^2 d\tau \leq M.$$

The above inequality implies that: $lim_{n\to\infty}\sigma_n = 0$. We have:

$$\frac{\dot{x}(t) - \dot{x}(\tau)}{t - \tau} = -\frac{x(t) - x(\tau)}{t - \tau} + A\frac{y(t) - y(\tau)}{t - \tau}$$

where the incremental quotient of $x(t)$ is bounded and the incremental quotient of y is bounded as well because $y(t)$ satisfies Lipschitz condition.

On the other hand we have:

$$\frac{|\dot{x}(\tau_n) - \dot{x}(\tau_n - \sigma_n)|}{\sigma_n} \geq \frac{|\dot{x}(\tau_n)| - |\dot{x}(\tau_n - \sigma_n)|}{\sigma_n} \geq \frac{\alpha - \varepsilon}{\sigma_n}$$

therefore

$$lim_{n\to\infty}\frac{|\dot{x}(\tau_n) - \dot{x}(\tau_n - \sigma_n)|}{\sigma_n} = \infty$$

that contradicts the fact that the incremental quotient of $\dot{x}$ is bounded. Hence:

$$lim_{t\to\infty}\dot{x}(t) = 0.$$

From (1.28) we derive:

$$lim_{t\to\infty}(-x + Ay) = 0$$

and therefore the system tends to the equilibrium point, i.e. it is completely stable according to the Definition 1.5. Theorem is proved.

If u and I are nonzero constants, the following Lyapunov function may be used to prove the complete stability of (1.28):

$$V(t) = \frac{1}{2}y^{'}(t)Py(t) + y^{'}(t)Ds$$

where $s = Bu + I$. The proof is analogous as the proof of Theorem 1.2.

Since CNNs are complex dynamical systems, one can expect richer dynamics to occur, if some changes are made in the canonical system of equations descibing CNNs. In the typical CNN circuit [27] a piece-wise linear output function was considered. We shall introduce in the output circuit a special type of resistor known as a tunnel diode which exibits a cubic characteristic output function:

$$y_{ij} = f(x_{ij}) = \frac{x_{ij}^3}{3} - x_{ij}, \tag{1.32}$$
$$1 \le i \le M\,,\ 1 \le j \le M.$$

Neural networks' origin is in neurophysiological models. Many psychophysical experiments have been conducted, which demonstrate the existence of hysteresis in human neurophysiological perception. In this sense it is interesting to determine whether hysteresis is present in neural networks as well.

Let us know consider the righthand side of the output equation (1.32) in the form: $g(c,x) = c + \frac{x^3}{3} - x$ (see Fig.8), where $x \stackrel{def}{=} x_{ij}$. It is obvious that $g(c,x) = c$ gives us output function f. We shall study the dynamics of $g(c,x)$ for different values of the parameter c in order to show how hysteresis arises in our CNN model. For $c = 0$, equation (1.32) has stable orbit structure. The flow continues to have stable orbit structure for small values of the parameter, that is, for $-c_1 < c < c_1$ where $c_1 = \frac{2}{3}$ is the local minimum value and $-c_1$ is the local maximum value of $g(0,x)$. For $c = -c_1$ or $c = c_1$ the equation is at a bifurcation point. For the parameter values $c < -c_1$ and $c > c_1$ the equation again has stable orbit structure. The bifurcation diagram is given in Fig.8.

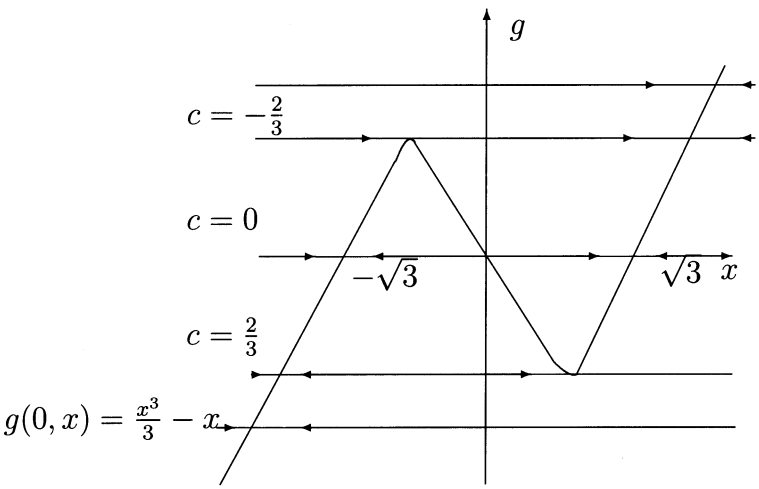

Fig.8. Bifurcation diagram for the function $g(c,x)$.

Because of its frequent occurence in applications, it is worthwhile to explore the dynamics of such CNN in a bit more detail. If we start the system with a very large negative value of c, after a long time the system will be very near the stable equilibrium state on the right leg of the cubic. Now, let us continuously increase the value of the parameter c. Since the system was near the stable state when we began to vary c it will stay near this stable state for small variations in c. In fact, as we increase the parameter c the system will follow the stable equilibria on the right until $c = c_1$. At this point the system will jump to a different stable equilibrium state on the left leg of the cubic. As we continue to increase the parameter c, the system will follow the stable equilibria on the left. The vector lines on the right side in Fig.9 show the equilibria the system will follow as c is increased from a very large negative value to a very large positive value. Now, if we start decreasing the parameter c from a very large positive value, the system will follow the equilibria on the left leg of the cubic until $c = -c_1$, at which point it will jump to the right leg. The vector lines on the left side in Fig.9 indicate the equilibria the system will follow as c is decreased from a very large positive value to a very large negative value. The important observation about this experiment is that the system experiences a jump at two different values of the parameter; moreover, the parameter value at which the jump takes place is determined by the direction in which the physical parameter is valued. This phenomenon is refered to as as **hysteresis** and that part in Fig.9 that resembles a parallelogram is called the **hysteresis loop**.

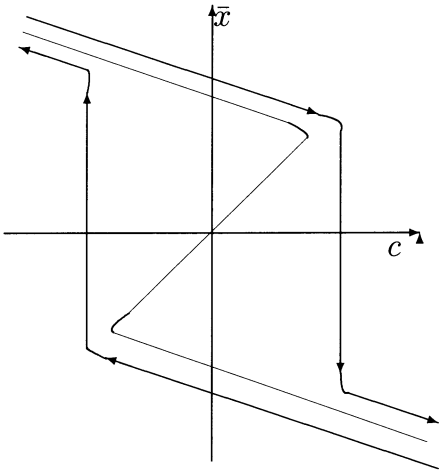

Fig.9. Hysteresis loop.

Let us consider the state equation of a CNN with linear cloning templates (1.4) in the form:

$$\dot{x} = -x + Ay + Bu + I, \tag{1.33}$$

where $x_{ij} \stackrel{def}{=} x$, $y_{ij} \stackrel{def}{=} y$, $u_{ij} \stackrel{def}{=} u$ and x, y, u are lined up $n = M.M$ dimensional vectors.

As mentioned before because of the nearest neighborhood property of CNN we can understand the global behavior of the whole circuit by studying first the local dynamics of a single cell. Therefore in our stability analysis we shall first define stable cell equilibrium points. We shall rewrite equation (1.33):

$$\begin{aligned} \dot{x} &= -x + A(\frac{x^3}{3} - x) + Bu + I \equiv \\ &\equiv F_1(x) + F_2(u,t), \end{aligned} \tag{1.34}$$

where $F_1 = -x + A(\frac{x^3}{3} - x)$, $F_2(u,t) = Bu + I$.

Let us for simplicity consider the case when $F_2(u,t) = 0$, then the equilibrium points for (1.34) are those for which $F_1(x) = 0$ [58]. Hence

$$F_1(\bar{x}) = -\bar{x} + A(\frac{\bar{x}^3}{3} - \bar{x}) = 0. \tag{1.35}$$

The associated linear system in a sufficient small neighbourhood of the equilibrium point $\bar{x}$ can be given by:

$$\frac{dz}{dt} = DF_1(\bar{x})z,$$

where $z = x - \bar{x}$, $DF_1(\bar{x}) = J$ is the Jacobian matrix of the equilibrium point and can be computed by:

$$J_{ps} = \frac{\partial F_{1p}}{\partial x_s}|_{x=\bar{x}}, \; 1 \leq p, s \leq n. \tag{1.36}$$

According to the theory of dynamical systems [58] if all of the eigenvalues of J have negative real part then the equilibrium point $x = \bar{x}$ is asymptotically stable. On the other hand, if one of the eigenvalues of J has a positive real part, then the equilibrium point $\bar{x}$ is unstable.

Let us consider again the characteristics of the output function $f(x) = \frac{x^3}{3} - x$. As mentioned above one can expect the hysteresis loop to appear in its dynamics. Because of the uniform nonlinearity in each cell of a CNN, it is reasonable to divide the n-dimensional, $n = M.M$, Euclidean space into two different types of subspaces:

1). $|x| > \sqrt{6}$ - Stability Subspace (SS);

2). $|x| \leq \sqrt{6}$ - Hysteresis Subspace (HS).

Now we can describe a very important dynamic behavior of our CNN within the two subspaces.

Theorem 1.3 *In the stability subspace (SS) any state equilibrium point for CNN described by the dynamical system (1.33), when* $F_2(u,t) = 0$, *will be asymptotically stable. In other words, any trajectory within SS will converge asymptotically to the corresponding unique state equilibrium point and therefore the whole subspace will belong to the basin of attraction of the equilibrium point.*

Proof: Suppose that there is an equilibrium point $\bar{x}$ in the stability subspace. From the bifurcation diagram (Fig.8) for the output function $f(x) = \frac{x^3}{3} - x$, it follows that in SS, $|x| > \sqrt{6}$, the system will be near a stable equilibrium state. Consider the Lyapunov energy function:

$$E(x) = \frac{1}{2}(x - \bar{x})^T(x - \bar{x}) = \frac{1}{2}\sum_{i=1}^{n}(x_i - \bar{x}_i)^2, \tag{1.37}$$

$$n = M.M.$$

Its time derivative in the stability subspace will be then:

$$\begin{aligned}
\dot{E}(x) &= (x-\bar{x})^T(\dot{x}) = (x-\bar{x})^T(-x + A(\frac{\bar{x}^3}{3} - \bar{x})) = \quad (1.38)\\
&= (x-\bar{x})^T(-x+\bar{x}) = -(x-\bar{x})^T(x-\bar{x}) = \\
&= -\sum_{i=1}^{n}(x_i - \bar{x}_i)^2 \leq 0.
\end{aligned}$$

The above equality holds only if $x = \bar{x}$. Therefore, according to the Lyapunov stability theorem [85], any $x \in SS$ will converge asymptotically to the unique equilibrium point $\bar{x}$ in the same subspace.
Let consider equation (1.33) when $F_2(u,t) = 0$:

$$\dot{x} = -x + A(\frac{x^3}{3} - x). \tag{1.39}$$

It is first order differential equation and therefore any trajectory is its solution:

$$x(t) = x_0 e^{-t} + \int_0^t e^{-(t-\tau)}[A(\frac{x^3}{3} - x)]\, dt. \tag{1.40}$$

Because of the stable behavior of the output function $f(x)$ for $|x| > \sqrt{6}$, the simple dynamics allows no oscillations or chaos within stability subspace. Theorem is proved.

Remark 1.5 The whole basin of attraction of an equilibrium point is usually much greater than its stability subspace. But Theorem 1.3 gives a minimal region in the basin of attraction and it is useful for our further analysis.

Let us now denote by $a_{qq} = A(i,j;i,j)$, $1 \leq q \leq n$. In [7], for $a_{qq} > 1$, the complete stability of a typical CNN has been proved. In our investigations below we shall impose the same condition.

Theorem 1.4 *If $a_{qq} > 1$, $1 \leq q \leq n$, in the hysteresis subspace (HS), any state equilibrium point of the CNN (1.33) is unstable, i.e. after the transient has decayed to zero any trajectory in HS will not converge to the state equilibrium point.*

Proof: The Jacobian matrix (1.36) for the system (1.39) will be:

$$J = A(\bar{x}^2 - 1) - I_d, \tag{1.41}$$

I_d is the identity $(n \times n)$ matrix .

If we consider the characteristics of the output function $f(x)$ (Fig.8), we have three equilibrium points $\bar{x} = 0$, $\bar{x} = \pm\sqrt{3}$. Then the sum of the eigenvalues of J for $\bar{x} = 0$ is:

$$\sum_{q=1}^{n} \lambda_q = trace(-A - I_d) = \sum_{q=1}^{n}(-a_{qq} - 1).$$

This sum will be negative for $a_{qq} > -1$.

For the state equilibrium point $\bar{x} = \pm\sqrt{3}$, the sum of the eigenvalues of J will be the following:

$$\sum_{q=1}^{n} \lambda_q = trace(2A - I_d) = \sum_{q=1}^{n}(2a_{qq} - 1).$$

This sum will be negative for $a_{qq} < \frac{1}{2}$. Therefore the intersection for the two cases is the interval $-1 < a_{qq} < \frac{1}{2}$. For the condition $a_{qq} > 1$ there will be some eigenvalues of the Jacobian J which will have positive real parts.According to the stability theory of dynamical systems [58] it follows that the state equilibrium points for our CNN (1.39) are unstable.

Remark 1.6 For the case $F_2(u,t) = Bu + I = const. > 0$ the Jacobian J is the same and therefore the stability analysis is analogous and the same theorems can be proved.

As we mentioned above the main property of CNN is the nearest neighborhood property, which means that each cell's circuit equation is the same as that of the other cells in the same circuit. After defining the stable state equilibrium points in the previous theorems, we can focus now on the global behavior of our CNN.

Definition 1.6 *A stable system equilibrium point of CNN described by the dynamical system (1.33) is defined to be any state vector with all its components consisting of stable cell equilibrium states* $\bar{x}$, $|x| > \sqrt{6}$.

1.3.2 Stability of a general CNN

Consider now a general cellular neural network (GCNN) architecture. It consists of three units. The first unit, which is a multi-unit, single ouput, linear, resistive cicuit, forms a weighted sum of external inputs (u_k) and the ouputs of the neighbour cells (y_k). The output of the first unit (w_k) is fed into the second unit. The second unit is a single input (w_k) single output (z_k), n-order linear dynamical circuit. The only nonlinear part of the cell is the third unit, which receives z_k and passes it through a nonlinearity f_k. The general neural network model with such a cell is described by the following dynamical systems of differential-difference equations:

$$\frac{dx}{dt} = -Dx(t) + Ew(t), \tag{1.42}$$

$$z(t) = Cx(t) + Hw(t), \tag{1.43}$$

$$y(t) = f(z), \tag{1.44}$$

$$w(t) = Ay(t) + Bu + I, \tag{1.45}$$

where the cell state vector $x \in R^n$, $n = M.M$, i.e. it is produced by lining up every row of the cell states in sequence (lexicographical order). and the relation between the state of a single cell in our GCNN and the typical CNN [27] is : $x_k = x_{ij}$, $i = ((k-1)\, div\, M)+1$, $j = ((k-1)\, mod\, M) + 1$
(div means the integer division, and mod means the modular division). The input u is n-dimensional vector, I is the offset of a cell and they are assumed to be constant. D is $n \times n$ constant matrix, E, C, H are constant vectors. The output of the first, second units w, z and f are functions of time t. A and B are usually sparse matices with the template coefficients at proper places.

The motivation of considering the set of differential-difference equations (1.42-1.45) which describe our general cellular neural network, is that a partial linearization of nonlinear differential equations having the state equation form yields such a class of nonlinear equations [159]. Many implementations which exhibit high-order dynamical effects, propagation delays and variations in the cell structure and its parameters from cell to cell constitute sublasses of our model [159].

We shall consider the function f to be of the following form:

$$f_k(z_k) = \frac{2V}{\pi} tan^{-1}(\frac{\pi}{2V} z_k). \tag{1.46}$$

This function is sigmoidal function with positive number V and it belongs to the open sector $(0, V)$.

Definition 1.7 *Let $f_k(0) = 0$. We say that the function $f_k(.)$ belongs to the sector (v_1, v_2) if $v_1 z_k^2 < z_k f_k(z_k) < v_2 z_k^2$ for all $z_k \neq 0$.*

Therefore in our case $f_k(z_k)$ belongs to the open sector (v_1, v_2) with $v_1 = -V$, $v_2 = V$ because the graph of $f_k(z_k)$ versus z_k lies between and does not toach the slopes v_1, v_2 (Fig.10).

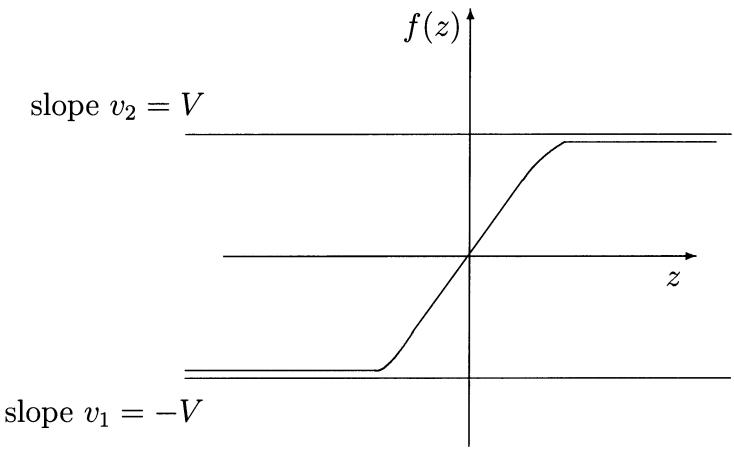

Fig. 10. The region where the output function $y = f(z)$ of the generalized CNN belongs.

The stability analysis of such CNN having a nonlinearity satisfying some sector conditions is referred in the literature as **absolute stability analysis**. For that reason we will analyze first the stability of a single cell by applying the aparatus of Lyapunov's

majorizing equations, and then we shall make a global asymptotic stability analysis of the equilibrium points of the network.

For the stability analysis of an isolated cell of our generilized model of neural networks we will apply the method of Lyapunov's finite majorizing equations [55]. First we shall give some preliminaries concerning this method which present an algorithm of the proposed method.

The method of Lyapunov's majorizing equations can be applied for the following operator equations:

$$v = LF(v, t, \mu), \tag{1.47}$$

where $F(v, t, \mu)$ is the function of the variables v, t and small positive parameter μ, and it belongs to $C[t]$ and $C[\mu]$, it is differentiable (or Lipschitzian) with respect to v in some domain.

Operator L is linear and bounded and hence continuous. We suppose also that

$$F(0, t, 0) = 0 \ , \ \frac{\partial F(0, t, 0)}{\partial v} = 0.$$

Then we first construct the inequalities expressing the boundedness of the operator L in the form:

$$\begin{aligned} \|L\varphi(t)\| &\leq \Lambda q \\ \|\varphi(t)\| &\leq q, \end{aligned} \tag{1.48}$$

where Λ is a constant chosen as accurately as possible. Second we find Lyapunov's majorant $\Phi(\alpha, \mu)$ for the function $F(v, t, \mu)$ and we write Lyapunov's finite majorizing equations in the form

$$\alpha = \Lambda\Phi(\alpha, \mu), \tag{1.49}$$

where $\|v(t, \mu)\| \leq \alpha(\mu)$. Finally we construct the required solutions of the operator equations (1.49) in any domain of μ with the help of the following convergent successive approximations

$$\begin{aligned} v_s &= LF(v_{s-1}, t, \mu), \ s = 1, 2, \ldots, \\ v_0 &\equiv 0. \end{aligned} \tag{1.50}$$

The following basic theorem is then valid [55]:

Theorem 1.5 *If the system (1.49) has for $\mu \in [0, \mu_*]$ a solution $\alpha(\mu) \in C[0, \mu_*]$, which is positive for $\mu > 0$ and it is such that $\alpha(0) = 0$, $\|\alpha(\mu_*)\| \leq R$, then the sequence $\{v_s(t, \mu)\}$ defined in accordance with (1.50), converges for any t, $\mu \in [0, \mu_*]$ to the solution $v(t, \mu)$ of (1.47). Moreover, this solution is unique in the classes $C[t]$ and $C[\mu]$.*

Remark 1.7 This theorem can be used as an existence and uniqness theorem only. In this case it is sufficient just to have bounded operator L and to check the conditions for the function F, but not to construct the Lyapunov's majorants or majorizing equations. In this sense one can claim that such a majorants and majorizing equations theoretically could be constructed and for some small interval of μ their positive solutions exist [55].

Let us now rewrite system (1.42)-(1.45) in the following form for an isolated cell:

$$\begin{aligned} \dot{x} &= -Dx + A_1 y + B_1 u + C_1 I = F_1(x, z, t, u), \\ z &= Cx + A_2 y + B_2 u + C_2 I = F_2(x, z, t, u), \end{aligned} \tag{1.51}$$

where $y = f(z) = \frac{2}{\pi} tan^{-1}(\frac{\pi}{2} V z)$, $A_1 = E.H$, $B_1 = E.B$, $C_1 = E$, $A_2 = H.A$, $B_2 = H.B$, $C_2 = H$.

We introduce the following auxiliary system for (1.51):

$$\begin{aligned} \dot{x} &= -Dx + \varphi(t, u), \\ z &= Cx + \psi(t, u), \end{aligned} \tag{1.52}$$

where $\varphi(t, u)$ and $\psi(t, u)$ are arbitrary continuous functions in t and u, $t \in [0, T]$. First equation in the system (1.52) is a first order differential equation, hence we can write its equivalent integral equation:

$$x = [e^{DT} - I_d]^{-1} \int_t^{t+T} e^{-D(t-s)} \varphi(s, u)\, ds. \tag{1.53}$$

Then in accordance to (1.52) and (1.53) the following operator system can be written for the auxiliary system (1.52):

$$\begin{aligned} x &= L_1 \varphi(t, u), \\ z &= L_2 \psi(t, u). \end{aligned} \tag{1.54}$$

Operators L_1 and L_2 are linear and bounded and hence there exist constants ρ_1 and ρ_2 positive and such that the following inequalities are satisfied:

$$\begin{aligned} \|L_1\varphi(t,u)\| &\leq \rho_1\|\varphi(t,u)\|, \\ \|L_2\psi(t,u)\| &\leq \rho_2\|\psi(t,u)\|, \ t \in [0,T]. \end{aligned} \tag{1.55}$$

Let us go back to the system (1.51). We shall give now the following condition for the function $f(.)$, called sector condition.

Definition 1.8 *An $f(.)$ with $f_k(0) = 0$ satisfies the incremental sector condition if there exist real constants v_1 and v_2 satisfying $v_2 \geq v_1$ such that*

$$v_1(\xi_k^{'} - \xi_k^{''})^2 \leq (\xi_k^{'} - \xi_k^{''})(f_k(\xi_k^{'}) - f_k(\xi_k^{''})) \leq v_2(\xi_k^{'} - \xi_k^{''})^2,$$

for all $\xi_k^{'}$, $\xi_k^{''} \in R$.

A function $f_k(.)$ which satisfies the above condition is monotonically increasing, uniformly increasing and strongly uniformly increasing if $\infty \geq v_2 \geq v_1 = 0$, $\infty \geq v_2 \geq v_1 > 0$ and $\infty > v_2 \geq v_1 > 0$ respectivelly. A function $f_k(.)$ satisfying the incremental sector condition with finite v_1 and v_2 is Lipschitz-continuous with the Lipschitz constant $\frac{1}{2}(|v_2 - v_1| + |v_2 + v_1|)$:

$$|f_k(\xi_k^{'}) - f_k(\xi_k^{''})| \leq 1/2(|v_2 - v_1| + |v_2 + v_1|)|\xi_k^{'} - \xi_k^{''}|.$$

On the other hand, if $f_k(.)$ is differentiable, then the derivative satisfies the inequalities

$$v_1 \leq \frac{df_k(\xi_k)}{d\xi_k} \leq v_2.$$

Therefore the conditions for the differentiability of the function f and hence of the functions F_1 and F_2 are satisfied.

Then the following operator system for an isolated cell of our general CNN, which is equivalent to the system (1.51) can be constructed:

$$\begin{aligned} x &= \tilde{L}_1 F_1(x,z,t,u), \\ z &= \tilde{L}_2 F_2(x,z,t,u). \end{aligned} \tag{1.56}$$

Now, according to (1.55) and (1.56) we construct the following system of Lyapunov's majorizing equations in the certain domains $t \in [0, T]$ and $u \in [0, u_*]$:

$$\begin{aligned} \alpha(u) &= \tilde{\rho}_1 \Phi(\alpha, \beta, u), \\ \beta(u) &= \tilde{\rho}_2 \Psi(\alpha, \beta, u), \end{aligned} \tag{1.57}$$

where $\Phi(\alpha, \beta, u)$ and $\Psi(\alpha, \beta, u)$ are Lyapunov's majorants for F_1 and F_2, respectively. Moreover, $\alpha \geq |x|$ and $\beta \geq |z|$.

Therefore according to the Theorem 1.5 and the properties of Lyapunov's majorizing equations [55] the following theorem has been proved:

Theorem 1.6 *Suppose that system (1.57) in the domains $t \in [0, T]$ and $u \in [0, u_*]$ has positive solutions $\alpha = \alpha(u)$ and $\beta = \beta(u)$ for $0 \leq u \leq u_*$ and $||\alpha(u_*)|| \leq V$, $||\beta(u_*)|| \leq V$. Then system (1.51) has for $u \in [0, u_*]$ solutions $x(t, u)$, $z(t, u)$, which are unique in the classes of functions $C[t]$ and $C[u]$. These solutions can be found by the following convergent simple iterations:*

$$\begin{aligned} x_s &= \tilde{L}_1 F_1(x_{s-1}, z_{s-1}, t, u), \\ z_s &= \tilde{L}_2 F_2(x_{s-1}, z_{s-1}, t, u), \ s = 1, 2, \ldots, \\ x_0 &\equiv x(0)\,,\ z_0 \equiv z(0). \end{aligned} \tag{1.58}$$

Remark 1.8 Using the method of Lyapunov's majorizing equations is a new approach in studying the stability of CNN. Moreover, we find the stable equilibrium states of our CNN with the help of the simple iterations (x_s, z_s) by fixing $u = u^*$ and $t = t_0$.

In this sense Theorem 1.6 proves that after the transient has decyed to zero in the circuit, CNN always settle at the stable equilibrium states x^* and z^* given by the following formulas:

$$\begin{aligned} x^* &= \tilde{L}_1 F_1(x^*, z^*, u^*, t_0), \\ z^* &= \tilde{L}_2 F_2(x^*, z^*, u^*, t_0). \end{aligned} \tag{1.59}$$

Remark 1.9 It is easily to prove that the output $y(t) = \frac{2}{\pi}$ $tan^{-1}(\frac{\pi}{2} V z)$ is a constant after the transient has decayed to zero in the circuit. In other words we have:

$$lim_{t \to \infty} y(t) = const. \tag{1.60}$$

Remark 1.10 In reference [27] Chua has been proved that after the transient has decayed to zero CNN settles at the stable equilibrium state if the following condition is satisfied $A > 1$. In our approach by using method of Lyapunov's majorizing equations we prove the stability without the above condition which is the main advantage of the this method.

We shall now present the definition of **global asymptotic stability** of a system defined by the autonomous differential equation:

$$\dot{x}(t) = F[x(t)].$$

Definition 1.9 *The system is said to be globally asymptotically stable if each solution $x(t)$ converge to a unique equilibrium state.*

In our CNN the equilibrium states x^*, z^* defined by (1.59) are unique equilibrium states of the system according to Theorem 2. Therefore following the above definition we will prove global asymptotic stability of CNN described by (1.42) - (1.45):

Theorem 1.7 *Consider the variables associated with a single cell in an interconnected network of many cells described by the dynamical system (1.42) - (1.45). Suppose that the nonlinearity $f_k(.)$ satisfies the Lipschitz sector condition with finite constants $v_1 = -V$ and $v_2 = V$ and D is positive. Under these conditions, for each constant input $u = u^*$ the cell has a globally asymptotically stable equilibrium points (x^*, z^*), which are the unique solutions of (1.42) - (1.45) if the following conditions are satisfied:*

a). $|x(0)| \leq V$, $|z(0)| \leq V$, $|u| \leq V$;

b). system of Lyapunov's majorizing equations (1.57) has positive solutions and the following estimates are satisfied:

$$||x(u,t)|| \leq \alpha(u),$$

$$||z(u,t)|| \leq \beta(u).$$

Such stability is called **absolute global stability**.

Proof: Given a cell with constant input, let us derive another cell with zero input such that an equilibrium point x_i^* of the given cell is globally asymptotically stable if and only if the equilibrium point 0 of the new cell is globally asymptotically stable. Let $((x_k^*)^T, z_k^*)^T$

be a solution of (1.59). By a change of variables, the system of equations (1.42)-(1.45) can be transformed into the system

$$\dot{\bar{x}}_k(t) = -D_k\bar{x}_k(t) + E_k w_k(t), \tag{1.61}$$

$$\bar{z}_k(t) = C_k^T\bar{x}_k(t) + H_k\bar{w}_k(t), \tag{1.62}$$

$$\bar{y}_k(t) = G_k(\bar{z}_k(t)) = f_k(\bar{z}_k(t) + z_k^*) - f_k(z_k^*), \tag{1.63}$$

$$\bar{w}(t) = A_k\bar{y}(t) + Bu^* + I, \tag{1.64}$$

where $\bar{x}_k(t) = x_k(t) - x_k^*$, $\bar{w}_k(t) = w_k(t) - w^*$, $\bar{y}_k(t) = y_k(t) - y_k^*$, $\bar{z}_k(t) = z_k(t) - z^*$, $y_k^* = f_k(z_k^*)$.

Observe that the transformed cell nonlinearity $G_k(.)$ belongs to the sector $[v_1, v_2]$, since $G_k(0) = f_k(z_k^*) - f_k(z_k^*) = 0$ and for $z_k^{'} = \bar{z}_k + z_k^*$, $z_k^{''} = z_k^*$ we have

$$v_1\bar{z}_k^2 \leq \bar{z}_k^2 G_k(\bar{z}_k) \leq v_2\bar{z}_k^2.$$

Equation (1.61) is equivalent to the following integral equation:

$$\bar{x}_k(t) = e^{D_k t}\bar{x}_k(0) + \int_0^t e^{-D_k(t-s)}E_k\bar{w}_k(s)\,ds. \tag{1.65}$$

Let us substitute (1.65) in (1.62), hence

$$\bar{z}_k(t) = C_k^T e^{D_k t}\bar{x}_k(0) + \int_0^t C_k^T e^{-D_k(t-s)}E_k\bar{w}_k(s)\,ds + H_k\bar{w}_k(t). \tag{1.66}$$

Then we can write the following operator system equivalent to (1.65) and (1.66):

$$\begin{aligned} \bar{x}_k(t) &= \bar{L}_1[\bar{w}_k(t)], \\ \bar{z}_k(t) &= \bar{L}_2[\bar{w}_k(t)] \end{aligned} \tag{1.67}$$

Operators $\bar{L}_1$ and $\bar{L}_2$ are linear and bounded.

According to the condition b). of the Theorem and the aparatus of the Lyapunov's majorizing equation [55] it follows that $\bar{x}_k(t)$ tends to zero as $t \to \infty$ and $\bar{z}_k(t)$ tends to zero as $t \to \infty$ when $u = 0$. Theorem is proved.

1.4 Examples

In this section we shall present several examples to ilustrate how the CNNs described in the previous sections work. These examples will also help to provide a better understanding of the theorems proved in the preceding sections.

1. As the first example we shall consider CNN of size 4×4. The circuit element parameters of the cell $C(i,j)$ are chosen as follows.

For any $C(k,l) \in N_r(i,j)$ with $r = 1$, i.e. for any 3×3 neighborhood system (Fig.1), let the dynamic equations of the CNN are given by:

$$\frac{dx_{ij}(t)}{dt} = 10^6[-x_{ij}(t)+2y_{ij}(t)+y_{ij-1}(t)+y_{i-1j}(t)+y_{i+1j}(t)+y_{ij+1}(t)] \tag{1.68}$$

$$y_{ij}(t) = 0.5(|x_{ij}(t)+1| - |x_{ij}-1|) \tag{1.69}$$

$1 \leq i \leq 4, 1 \leq j \leq 4$.

The behavior of the above CNN has be simulated [27] with the initial condition specified in the array:

-0.8	1.0	-1.0	-0.6
1.0	1.0	1.0	-1.0
-1.0	0.9	-1.0	-0.8
-0.9	-1.0	-0.7	-0.8

The state variables of the circuit, x, at time $t = 5\mu s$ are shown below:

3.95	2.98	-2.97	-3.98
2.98	2.02	-3.94	-4.96
-2.98	-3.94	-5.94	-4.97
-3.98	-4.96	-4.97	- 3.98

The corresponding outputs, y, at $t = 5\mu s$ are shown below:

1.0	1.0	-1.0	-1.0
1.0	1.0	-1.0	-1.0
-1.0	-1.0	-1.0	-1.0
-1.0	-1.0	-1.0	-1.0

Observe that all output variables assume binary values, either 1 or -1, as it was poinetd out.

For our current example, the stable cell equilibrium states of an inner cell circuit $C(i,j)$ are the solutions x_{ij} of the dc cell circuit equations obtained by replacing all capacitors by open circuits; namely

$$x_{ij} = 2y_{ij} + y_{i-1j} + y_{i+1j} + y_{ij-1} + y_{ij+1}, \tag{1.70}$$

under the conditions:

$$|x_{kl}| \geq 1, 1 \leq k, l \leq 4 \tag{1.71}$$

$$|y_{kl}| = 1, 1 \leq k, l \leq 4. \tag{1.72}$$

Substituting condition (1.71) into the dc equation (1.69) and using the $sgn(.)$ function defind by

$$sgn(x) = \begin{cases} 1, & x > 0 \\ 0, & x = 0 \\ -1, & x < 0 \end{cases}$$

we obtain

$$x_{ij} = 2sgn(y_{ij}) + sgn(y_{i-1j}) + sgn(y_{i+1j}) + sgn(y_{ij-1}) + sgn(y_{ij+1}). \tag{1.73}$$

Furthermore, since $sgn(y_{ij}) = sgn(x_{ij})$ from (1.68), it follows that

$$x_{ij} - 2sgn(x_{ij}) = sgn(y_{i-1j}) + sgn(y_{i+1j}) + sgn(y_{ij-1}) + sgn(y_{ij+1}). \tag{1.74}$$

Observe that the right-hand side of (1.73) can only assume five possible values; namely, $-4, -2, 0, 2$ and 4. It follows that the corresponding values that can be assumed by the state variable x_{ij} are $-6, -4$, (-2 or 2), 4, and 6.

It follows from the above analysis that each inner cell circuit for our present example can have only six possible stable cell equilibrium states; namely, $-6, -4, -2, 2, 4$ and 6. The actual stable cell equilibrium state attained by each cell clearly depends on its initial state as well as those of its neighbor cells. Hence a cell may eventually approach any one of its stable equlibrium state even if its initial state remains unchanged. It is observed [27] that even though the steady states of a cell all start from the same initial point, they approach different points via different routes. Another interesting phenomenon can be observed by choosing the 4 distinct sets of initial conditions below:

0.8	1.0	1.0	0.6
1.0	1.0	1.0	1.0
-1.0	0.9	-1.0	-0.8
-0.9	-1.0	-0.7	-0.8

0.7	1.0	0.8	0.2
0.9	-0.5	1.0	1.0
-1.0	0.9	-1.0	-0.8
-0.8	-1.0	-0.7	0.2

-0.4	0.8	1.0	0.6
0.9	0.7	0.7	1.0
-0.8	-0.9	-0.7	-0.8
-0.9	0.2	-0.8	-0.4

0.5	1.0	0.8	-0.2
0.9	0.5	0.4	1.0
-0.9	-0.9	-0.4	-0.8
-0.9	0.0	-.70	0.2

Observe that even though these initial conditions are very different, their corresponding final states at $t = 5\mu s$ are virtually identical:

3.98	4.97	4.97	3.98
2.99	3.99	3.98	2.99
-2.98	-3.94	-3.97	-2.99
-3.98	-4.96	-4.97	- 3.98

3.98	4.97	4.97	3.97
2.98	3.97	3.98	2.99
-2.98	-3.97	-3.97	-2.98
-3.98	-4.97	-4.97	- 3.97

3.96	4.97	4.97	3.98
2.98	3.98	3.98	2.99
-2.99	-3.98	-3.98	-2.98
-3.98	-4.96	-4.97	- 3.97

3.98	4.97	4.97	3.97
2.99	3.98	3.97	2.98
-2.99	-3.98	-3.97	-2.98
-3.98	-4.96	-4.97	- 3.97

From all the above observations it follows that CNN is always at one of its stable system equilibrium point after the transient has decayed to zero. Since any stable system equilibrium point of a CNN is a limit point of a set of trajectories of the corresponding differential equations, such an attracting limit point has a basin of attraction. Therefore, the state space of a CNN can be partitioned into a set of basins centered at the stable system equilibrium points.

In our example, the CNN can be used to map an initial state of a system into one of many distinct stable system equilibrium points. If we consider the initial space as $[-1.0, 1.0]^{M\times M}$ and the output space as $\{-1, 1\}^{M\times M}$, then the dynamic map F, can be defined as: $F : [-1.0, 1.0]^{M\times M} \to \{-1, 1\}^{M\times M}$. This property can be exploited in the design of associate memories, error correcting codes, and fault-tolerant systems.

2.As a second example we shall consider a two-cell autonomous CNN with hysteresis giving opposite-sign template:

$$\begin{aligned} \dot{x}_1 &= -x_1 + ah(x_1) - bh(x_2) + cu, \\ \dot{x}_2 &= -x_2 + bh(x_1) + ah(x_2) + cu, \end{aligned} \tag{1.75}$$

where $a > 1$ and $b > 0$, and u is a constant input, $|u| \leq 1$, $c > 0$.

We shall consider the hysteresis region, i.e. $|x| \leq 1$. According to the previous sections and Theorem 1.4, in this region we have periodic benaviour of our CNN. As the task is to find periodic solutions of (1.75), we will seek them in the form of trigonometrical Fourier series. This allows us to make a numerical construction of the periodic solutions. Then the approximations of the solutions will be the following:

$$\begin{aligned} x_1^{(i)} &= \sum_{n=1}^{N} D_{n1}^{(i)} cosnt + E_{n1}^{(i)} sinnt, \\ x_2^{(i)} &= \sum_{n=1}^{N} D_{n2}^{(i)} cosnt + E_{n2}^{(i)} sinnt. \end{aligned} \tag{1.76}$$

The iterations will be stopped when the difference $\|x^{(k)} - x^{(k-1)}\| \leq \delta$, δ is a given small number.

This algrithm is very useful, because in the calculations we reach to multiplication, raising to the power and addition of the Fourier polynomials, for which it is possible to compose standard software. It is important for the iterative processes to be convergent (in the sence of Theorem 1.4), because only in this case can the highest degree of precission be ensured while constructing solutions.

Let us go back to the example (1.75). If we consider $a - 1 = \varepsilon \in (-\delta, \delta)$, $\delta > 0$, $b > 0$, $c = 0$, we have:

$$\begin{aligned} \dot{x}_1 &= -x_1 + (1+\varepsilon)h(x_1) - bh(x_2), \\ \dot{x}_2 &= -x_2 + bh(x_1) + (1+\varepsilon)h(x_2). \end{aligned} \tag{1.77}$$

The Jacobian matrix is given by:

$$J = \begin{bmatrix} \varepsilon & -b \\ +b & \varepsilon \end{bmatrix}.$$

Then the Hopf bifurcation theorem [58] can be applied in this case:

Theorem 1.8 *For the system defined in (1.77)*

1). $\varepsilon = \varepsilon_0 = 0$ is a bifurcation point of the system. This is a local bifurcation of the only system equilibrium.

2). for $\varepsilon \in (\varepsilon_1, \varepsilon_0)$ some $\varepsilon_1 < \varepsilon_0$ the origin is a stable focus;

3). for $\varepsilon \in (\varepsilon_0, \varepsilon_2)$ some $\varepsilon_0 < \varepsilon_2 < b$ the origin is an unstable focus.

As the justification of the above theorem we use computer system PHASER [62] for obtaining the phase portraits and the vector fields in different cases.

In the first case we have $\varepsilon = \varepsilon_0 = 0$. With $b = 1$, $c = 1$, $u = 1$.

For $\varepsilon = 0$, this is the harmonic oscillator and we obtain that all solutions are periodic so that the origin is a center. Since at this value of ε the number of periodic orbits changes from none to many, we consider $\varepsilon = 0$ a bifurcation value.

For $\varepsilon < 0$, which is the second case, $a = 0.2$, $b = 1$, $c = 1$, $u = 1$. All solutions spiral clockwise into the origin with increasing t. Therefore we consider the origin as a stable focus.

For $\varepsilon > 0$, $a = 2$, $b = 1$, $c = 1$, $u = 1$, i.e. the third case, the phase portrait shows unstable origin. This is because all solutions spiral out clockwise without bounds.

For $\varepsilon = 1$, $a = 0$, $b = 1$, $c = 1$, $u = 1$ we have chaotic attractor. In this case we have supercritical Poincare-Andronov-Hopf bifurcation, which has an attracting curve encirling the origin.

3.As an example of CNN with hysteresis nonlinearity in the feedback circuit we shall consider the following two-cell autonomous CNN:

$$\begin{aligned} \dot{x}_1 &= -x_1 + a_1 f(x_1) - a_2 f(x_2) + bu + i, \\ \dot{x}_2 &= -x_2 + a_2 f(x_1) + a_1 f(x_2) + bu + i, \end{aligned} \tag{1.78}$$

where $a_1 > 1$, $a_2 > 0$, $bu + i = const. > 0$, $f(x) = \frac{x^3}{3} - x$.

On of the most powerful methods for studying autonomous nonlinear dynamical systems is the theory that is based on a theorem by Hopf. He showed that the oscillations near the equilibrium point can be understood by looking at the eigenvalues of the linearized equations for perturbations from equilibrium [58]. We shall outline this theorem without proof and use it for the analysis of (1.78):

Theorem 1.9 (Hopf Bifurcation theorem) *Suppose the system $\dot{x} = F(x, \mu)$, $\in R^2$, $\mu \in R$, has an equilibrium point at the origin for all values of the real parameter μ. Furthermore, suppose the eigenvalues, $\lambda_1(\mu)$ and $\lambda_2(\mu)$ of $J_0 = DF(0, \mu)$ are purely imaginary for $\mu = \mu^*$. If the real part of the eigenvalues, $R\{\lambda_1(\mu)\}(= R\{\lambda_2(\mu)\})$, satisfies*

$$\frac{d}{d\mu}(R\{\lambda_1(\mu)\})|_{\mu=\mu^*} > 0$$

and the origin is an asymptotically stable equilibrium point for $\mu = \mu^*$ then:

1). $\mu = \mu^*$ is a bifurcation point of the system;

2). for $\mu \in (\mu_1, \mu^*)$ some $\mu_1 < \mu^*$ the origin is a stable focus;

3). for $\mu \in (\mu^*, \mu_2)$ some $\mu_2 > \mu^*$ the origin is an unstable focus surrounded by a stable limit cycle, whose size increases with μ.

Let us consider the two-cell system defined above in the following form:

$$\begin{aligned} \dot{x}_1 &= -x_1 + (1+\mu) f(x_1) - a_2 f(x_2) + bu + i \\ \dot{x}_2 &= -x_2 + a_2 f(x_1) + (1+\mu) f(x_2) + bu + i, \end{aligned} \tag{1.79}$$

where we assume that $a_1 - 1 = \mu \in (-\delta, \delta)$, with $\delta > 0$. We shall prove that in HS bifurcations arise for our example.

Obviously this system has always an equilibrium point at $x = 0$. The Jacobian matrix for this point is:

$$J_0 = DF_1(0, \mu) = \begin{bmatrix} -2-\mu & a_2 \\ -a_2 & -2-\mu \end{bmatrix}. \tag{1.80}$$

For $\mu = \mu^* = 0$, it is clear that the system (1.79) almost meets all conditions of Theorem 1.8. So to show that system (1.79) has a Hopf-like bifurcation at $\mu = \mu^* = 0$, we have the following theorem:

Theorem 1.10 *For the two-cell CNN defined by the system (1.79)*

i). $\mu = \mu^* = 0$ is a bifurcation point of the system. This is a local bifurcation of the only system equilibrium;

ii). for $\mu \in (-2, \mu^*)$ the origin is a stable focus;

iii). for $\mu \in (\mu_1, -2)$ some $\mu_1 < -2 < \mu^*$ the origin is an unstable focus surrounded by a stable limit cycle.

Proof: From (1.80) we have that the eigenvalues of the system (1.79) at the origin are $\lambda_{1,2} = -(2+\mu) \pm ia_2$. So if $\mu > -2$ the origin is a stable focus and every trajectory starting in HS converges asymptotically into the origin.

If $\mu < -2$, the origin becomes an unstable focus. But is $\mu < a_2$ we know that the system has no stable equilibrium point. According to Poincare-Bendixson Theorem [58], there must be at least one stable limit cycle and there must be at least on e equilibrium point (the origin) in the region bounded by this limit cycle. So we have proved iii).

After ii). and iii). have been proved, i). follows immediately.

Remark 1.11 In the proof of ii). only the local convergence property of the equilibrium has been discussed.Since we are interested in global convergence we claim that if $\mu > -2$ then the system is convergent and cannot posses any limit cycle.

2 Dynamics of nonlinear and delay CNNs

The cellular neural network (CNN) paradigm can be applied as a powerful analogue nonlinear computing structure for a variety of array computations. In this chapter we shall show that by retaining all the important features of the original CNN structure [27] and by introducing very simple nonlinear and delay templates, the CNN becomes a good framework for general analogue array dynamics. We define nonlinear and controlled sources by:

$$\hat{A}_{ij,kl}(y_{kl}, y_{ij}) + \hat{A}^{\tau}_{ij,kl} y_{kl}(t-\tau)$$

and

$$\hat{B}_{ij,kl}(u_{kl}, u_{ij}) + \hat{B}^{\tau}_{ij,kl} u_{kl}(t-\tau)$$

where u, x and y denote the input, state and output variables respectively, possibly $\tau = \tau_{kl}$. The structure of the nonlinearity in the templates is important: it is a function of at most two variables, namely the output voltage of the cell C_{ij} and that of a neighbour C_{kl}. In particular, $\hat{A}_{ij,kl}$ and $\hat{B}_{ij,kl}$ are continuous functions, and $\hat{A}^{\tau}_{ij,kl}$ and $\hat{B}^{\tau}_{ij,kl}$ are real constants. We can call this CNN simply a nonlinear CNN or a delay CNN.

The development of nonlinear CNN has been influenced by the following facts. Neurobiological studies have demonstrated that neurons exhibit quite complicated dynamical behavior. The computer simulation of the dynamics of the proposed model confirms many phenomena, including chaos, which are observed in the biological experiments. The set of differential equations describing nonlinear CNN, defines a rather general class of nonlinear equations. Indeed, most of the equations governing nonlinear circuits and systems fall into this important class, and a partial linearization of nonlinear differential equations having the state equation form also yields such a class of nonlinear equations. Moreover, any system defined by this class of nonlinear equations can be considered as a feedback

control system for which many comprehensive results have been obtained in the literature [39,99,152]. In the light of the above circuit theoretical fact, the nonlinear CNN becomes a good candidate for modelling analogue hardware implementations of neural networks.

2.1 Nonlinear CNNs

2.1.1 Hopfield Neural Networks

The original model of Hopfield Neural Networks (HNNs) uses two-state threshold "neurons" that follow a stochastic algorithm. Each model neuron i has two states, characterized by the output V_i of the neuron having the values V_i^0 or V_i^1 (which may often be taken as 0 and 1, respectively). The input of each neuron comes from two sources, external inputs I_i and inputs from other neurons. The total input to neuron i is then

$$\text{Input to } i = H_i = \sum_{j \neq i} T_{ij} V_j + I_i.$$

The element T_{ij} can be biologically viewed as a description of the synaptic interconnection strength from neuron j to neuron i. The motion of the state of a system of N neurons in state space describes the computation that the set of neurons is performing. A model therefore must describe how the state evolves in time, and the original model describes this in terms of a stochastic evolution. It behaves as an associative memory when the state space flow generated by the algorithm is characterized by a set os stable fixed points. If these stable points describe a simple flow in which nearby points in state space tend to remain close during the flow, then initial states that are close to a particular stable state and far from all others will tend to terminate in that nearby stable state.

If the location of a particular stable point in state space is thought of as the information of a particular memory of the system, states near to that particular stable point contain partial information about that memory. From an initial state of partial information about a memory, a final stable state with all the information of the

memory is found. The memory is reached not by knowing an address, but rather by supplying in the initial state some subpart of the memory. Any subpart of adequate size will do -the memory is truly addressible by the content rather than location. A given T matrix contains many memories simultaneously, which are reconstructed individually from partial information in an initial state.

Convergent flow to stable states is the essential feature of this operation. There is a simple mathematical condition which guarantees that the state space flow algorithm converges on stable states. Any symmetric T with zero diagonal elements (i.e. $T_{ij} = T_{ji}$, $T_{ii} = 0$) will produce such a flow. The proof of this property follows from the construction of an appropriate energy function that is always decreased by any state change produced by the algorithm. Consider the function

$$E = -\frac{1}{2}\sum\sum_{i\neq j} T_{ij}V_iV_j - \sum_i I_iV_i + \sum_i U_iV_i.$$

The change ΔE in E due to changing the state of neuron i by ΔV_i is

$$\Delta E = -[\sum_{j\neq i} T_{ij}V_j + I_i - U_i]\Delta V_i.$$

But according to the algorithm, ΔV_i is positive only when the bracket is positive, and similarly for the negative case. Thus any change in E under the algorithm is negative. E is bounded, so the iteration of the algorithm must lead to stable state that do not further change with time.

Now we shall construct a model that is based on continuous variables and responses but retains all the significant behaviours of the original model. Let the output variable V_i for neuron i have the range $V_i^0 \leq V_i \leq V_i^1$ and be a continuous and monotone increasing function of the instantaneous input $u_i$to neuron i. The typical input-output relation $g_i(u_i)$ is sigmoid with asymptotes V_i^0 and V_i^1. For neurons exibiting action potentials, u_i could be thought of as the mean soma potential of a neuron from the total effect of its excitatory and inhibitory inputs. $V_i$can be viewed as the short term average of the firing rate of the cell i. Other biological intepretations are possible - for example, nonlinear processing may be done

at junctions in a dendritic arbor, and the model "neurons" could represent such junctions. In terms of electrical circuits, $g_i(u_i)$ represents the input-output characteristic of a nonlinear amplifier with negligible response time.

In a biological system u_i will lag behind the instantaneous outputs V_j of the other cell because of the input capacitance C of the cell membranes, the transmembrane resistance R, and the finite impedance T_{ij}^{-1} between the output V_j and the cell body of cell i. Thus there is a resistance-capacitance (RC) charging equation that determines the rate of change u_i.

$$C_i \frac{du_i}{dt} = \sum_j T_{ij} V_j - \frac{u_i}{R_i} + I_i,$$

$$u_i = g_i^{-1}(V_i).$$

$T_{ij}V_j$ represents the electrical current input to cell i due to the present potential of cell j, and T_{ij} is thus the synapse efficacy. Linear summing of inputs is assumed. T_{ij} of both signs should occur. I_i is any other (fixed) input current to neuron i.

Consider now the equation

$$E = -\frac{1}{2} \sum \sum_{i,j} T_{ij} V_i V_j + \sum_i \frac{1}{R_i} \int_0^{V_i} g_i^{-1}(V) dV + \sum_i I_i V_i.$$

Its time derivative for a symmetric T is

$$\frac{DE}{dt} = -\sum_i \frac{dV_i}{dt} (\sum_j T_{ij} V_j - \frac{u_i}{R_i} + I_i).$$

Having in mind the right-hand side of the RC charging equation we get

$$\frac{dE}{dT} = -\sum C_i (\frac{dV_i}{dt})(\frac{du_i}{dt}) =$$

$$= -\sum C_i g_i^{-1'}(V_i)(\frac{dV_i}{dt})^2.$$

Since $g_i^{-1}(V_i)$ is a monotone increasing function and C_i is positive, each term in this sum is nonegative. Therefore

$$\frac{dE}{dt} \leq 0, \frac{dE}{dt} = 0 \rightarrow \frac{dV_i}{dt} = 0$$

for all i. Together with the boundedness of E. the above equation shows that the time evolution of the system is motion in state space that seeks out minima in E and comes to a stop at such points. E is a Lyapunov function for the system.

This deterministic model has the same flow properties in its continuous space that the stochastic model does in its discrete space and is known as Hopfield Neural Network [70].

2.1.2 Nonlinear templates in CNNs

The canonical equations describing CNN analogue nonlinear processor array with nonlinear and delay templates are the following:
State equations:

$$\begin{aligned} \dot{x}_{ij}(t) &= -x_{ij}(t) + \sum_{C(k,l)\in N_r(i,j)} \hat{A}_{ij,kl}(y_{kl}(t), y_{ij}(t)) + \\ &+ \sum_{C(k,l)\in N_r(i,j)} \hat{B}_{ij,kl}(u_{kl}(t), u_{ij}(t)) + \sum_{C(k,l)\in N_r(i,j)} A^{\tau}_{ij,kl} y(t-\tau) + \\ &+ \sum_{C(k,l)\in N_r(i,j)} B^{\tau}_{ij,kl} u(t-\tau) + I. \end{aligned} \tag{2.1}$$

In [91] the nonlinear templates are defined symbolically as

$$\hat{A} = \begin{bmatrix} 0 & d_1 & 0 \\ d_1 & 2 & d_1 \\ 0 & d_1 & 0 \end{bmatrix}, \hat{B} = \begin{bmatrix} 0 & 0 & 0 \\ d_2 & 1 & d_2 \\ 0 & 0 & 0 \end{bmatrix},$$

with $d_1 = c_1[exp(y_{kl} - 1)]$, $d_2 = c_2(u_{kl} - u_{ij})$.

Another case is considered in Chapter 1; for instance:

$$\hat{A} = \begin{bmatrix} 0 & p_1 & 0 \\ p_2 & 2 & p_2 \\ 0 & p_1 & 0 \end{bmatrix}, \hat{B} = \begin{bmatrix} 0 & 0 & 0 \\ p_3 & 1 & p_3 \\ 0 & 0 & 0 \end{bmatrix}, \tag{2.2}$$

with $p_1 = c_1 y_{kl} y_{ij}$, $p_2 = c_2 exp(y_{kl})$, $p_3 = c_3(u_{kl} + u_{ij})$. Here we assume that the templates are space invariant.

Output equations:

$$y_{ij}(t) = f(x_{ij}(t)) \tag{2.3}$$

is described in Chapter 1 (1.14). In [59] it is allowed the output function to have a wider range of output voltages so that the saturation voltage is $\pm K$, $K > 0$, instead of ± 1. These slight changes extend the class of CNN dynamics significantly. It can be approximated by a smooth (C^1) strictly monotone increasing sigmoid function. This approximation is sometimes desirable in analytical proofs where C^1 condition is more convenient to work with. It is also a more realistic assumption since the physically realized characteristic is actually C^1.

As a further generalization we can use the output function with its own dynamics - (1.17), or with a higher order state equation.

Moreover, remaining monotone increasing, f might be more complicated. As an example we shall consider the following output equation:

$$\dot{y}_{ij}(t) = -y_{ij} + \int_0^1 f(x_{ij}(t))dt, \tag{2.4}$$

$$f(x_{ij}(t)) = \begin{cases} 0, & x_{ij} < 0 \\ x_{ij}(t), & 0 \leq x_{ij} \leq 1 \\ 1, & x_{ij} > 1 \end{cases} .$$

We shall use the standard
Input equation:

$$u_{ij} = E_{ij}. \tag{2.5}$$

The following constraint conditions and parameter assumptions are supposed:

$$|x_{ij}(0)| \leq 1, |u_{ij}(t)| \leq 1, \tag{2.6}$$

$$K \geq 0, \tau \geq 0. \tag{2.7}$$

The above canonical equations describe the CNN's dynamics. In order to apply specific qualitative results from dynamical system theory, it is convenient to reformulate these equations in a closed

vector-matrix form. In the case of linear cloning templates we have the simple form:

$$\dot{x} = -x + A^{LIN}y + B^{LIN}u + I, \tag{2.8}$$

where $x(t)$, $y(t)$, $u(t) \in R^{M^2} \times R^1$, $I \in R^{M^2}$ with all elements equal to I, $y = f(x)$ is a diagonal mapping with $y_i = f(x_i)$, and A^{LIN}, $B^{LIN} \in R^{M^2 \times M^2}$ (i.e. $(M^2 \times M^2)$ matrices). We have M^2 cells, i.e. M^2 elements in the vectors. In [110] three possibilities for ordering in a square grid with $M = 5$, are given. The nearest neighbours can be found in the vectors as far as the following respective index distances from each other:

$$M + 1, \;\; 2M - 2, \;\; 2M - 1.$$

For example, consider the linear cloning template

$$A = \begin{bmatrix} 0 & p_N & 0 \\ p_W & 2 & p_E \\ 0 & p_S & 0 \end{bmatrix}, B = 0, I = 0$$

and choose the diagonal reordering of [110]. The matrix A^{LIN} associated with this ordering is shown below:

$$A^{LIN} = \begin{bmatrix} 2 & p_E & p_S & & & & & & & & \\ p_W & 2 & & & p_S & p_E & & & & & \\ p_N & & 2 & p_S & p_E & & & & & & \\ & & p_N & 2 & & & p_E & p_S & & & \\ & & & & & & & & & & \\ & & & p_W & p_N & & 2 & & & & \\ & & & p_N & & & & 2 & p_S & & \\ & & & & & & & p_N & 2 & p_E & \\ & & & & & & & & & & \\ & & & & & & & & & & 2 \end{bmatrix} \tag{2.9}$$

For the general case of a CNN with nonlinear templates and using the same variables and vectors as above, the canonical matrix-vector description of the dynamics is

$$\dot{x} = -x + \hat{A}(y)e + \hat{B}(u)e + I, \tag{2.10}$$

where $e = [1, 1, 1, \ldots, 1]^T \in R^{M^2}$, $\hat{A}$ and $\hat{B}$ are $(M^2 \times M^2)$ - matrices with elements $\hat{A}_{ij,kl}(y_{kl}, y_{ij})$ and $\hat{B}_{ij,kl}(u_{kl}, u_{ij})$. The ordering of the cell variables into the vectors x, y and u is choosen in the same way as above for the linear template.

On the basis of the structure of the above canonical equations, several important stability results can be proved [110].

Definition 2.1 *A circuit is said to be* **completely stable** *iff every trajectory tends to an equilibrium state. Consequently, such a circuit can not oscillate or become chaotic.*

Here we propose the following theorem concerning the complete stability of CNN with nonlinear template elements [110].

Theorem 2.1 *If a CNN has a nonlinear cell-linking template [110] which has template elements with strictly monotone increasing C^1 characteristics in the nonlocal variable ($p(y_{kl}, y_{ij})$, $\partial p/\partial y_{kl} > 0$), then the CNN is completely stable except possibly from a set of initial conditions of measure zero.*

Proof: In view of the cell-linking property, the dynamics described by (2.10) is irreducible. Moreover, the hypothesis of Theorem 2.1 guarantees that all the off-diagonal terms of the associated Jacobian matrix are positive. Therefore [66] the dynamics is completely stable except for a starting set with measure zero.

If the output function $y = f(x)$ is nonlinear and nonmonotonic function, for example, gaussian or inverse gaussian function, satisfying the Lipschitz condition, then the Lyapunov function of type:

$$V(t) = x'(t)Qx(t) + \int_0^x f'(\psi)d\psi \tag{2.11}$$

has been introduced [51] to prove the complete stability of CNN with templates (1.4). In (2.11), $Q = -(2A)^{-1}$ is a symmetric matrix and the integral is taken along any paths terminating at the point x.

2.1.3 Stability of a CNN with nonlinear templates

We shall consider the following dynamical system equations describing a cellular neural network with nonlinear templates:
State equation:

$$\begin{aligned} \dot{x}_{ij} &= -x_{ij}(t) + \sum_{C(k,l)\in N_r(i,j)} A(y_{kl}(t), y_{ij}(t)) + \\ &\sum_{C(k,l)\in N_r(i,j)} B(u_{kl}, u_{ij}) + I, \end{aligned} \tag{2.12}$$

$$1 \le i \le M, 1 \le j \le M,$$

we will specify A and B in the form of a square array, henceforth called the cloning template which gives the dynamic rules of the cellular neural networks. For example:

$$A = \begin{bmatrix} 0 & p_1 & 0 \\ p_2 & 2 & p_2 \\ 0 & p_1 & 0 \end{bmatrix}, \quad B = \begin{bmatrix} 0 & 0 & 0 \\ p_3 & 1 & p_3 \\ 0 & 0 & 0 \end{bmatrix},$$

where $p_1 = c_1 y_{kl} y_{ij}$, $p_2 = c_2 exp(y_{kl})$, $p_3 = c_3(u_{kl} + u_{ij})$.

In particular, A, B are continuous functions of at most two variables. We assume that the templates are space invariant.
Output equation:

We shall allow the output function to have its own dynamics, instead of piecewise-linear function considered in [110,127].

$$\dot{y}_{ij} = -y_{ij} + f(x_{ij}(t)), \tag{2.13}$$

$$f(x_{ij}(t)) = \begin{cases} 0, & x_{ij} < 1 \\ x_{ij}(t), & 0 \le x_{ij} \le 1 \\ 1, & x_{ij} > 1 \end{cases}.$$

Remark 2.1 Function f might be more complicated, but still remaining monotone increasing.

In [27] it is proved that typical cellular neural networks with piecewise linear output function must always converge to a constant steady state after the transient has decayed to zero. Moreover, it

is obtained that these cellular neural networks have binary-valued outputs, which have applications in image-processing [28]. In our case we have output function (2.13) with its own dynamics. The question is if we can claim the convergence of our generalized cellular neural networks. An answer of this question gives the following theorem:

Theorem 2.2 *For a cellular neural network, described by the dynamical system (2.12), (2.13), we always obtain a constant output after the transient has decayed to zero. In other words we have:*

$$lim_{t\to\infty} y_{ij}(t) = const., \; 1 \le i \le M, 1 \le j \le N. \tag{2.14}$$

Proof: From the characteristic of function $f(x_{ij})$ it follows that we have four possible casses for the state of a cell $C(i,j)$:

$$1).\ x_{ij}(t) < 0,$$

$$2).\ 0 \le x_{ij}(t) \le 1\,,\ \frac{dx_{ij}}{dt} = 0,$$

$$3).\ 0 \le x_{ij}(t) \le 1\,,\ \frac{dx_{ij}}{dt} \ne 0,$$

$$4).\ x_{ij}(t) > 1.$$

Output equation (2.13) is a first order differential equation, therefore its solution is [60]:

$$y_{ij}(t) = y_{ij}(0)e^{-t} + \int_0^t e^{-(t-\tau)} f(x_{ij})\, d\tau. \tag{2.15}$$

If $x_{ij}(t) \le 0$ then $f(x_{ij}) = 0$, $lim_{t\to\infty} y_{ij}(t) = 0$ from (2.15). In the fourth case $x_{ij}(t) > 1$ then $f(x_{ij}(t)) = 1$ and $lim_{t\to\infty} y_{ij}(t) = 1$ from (2.15). In the second case we have $f(x_{ij}) = x_{ij} = const. = c$ then

$$y_{ij}(t) = y_{ij}(0)e^{-t} + c(1 - e^{-t}) \Rightarrow$$
$$lim_{t\to\infty}(t) = c = const.$$

If we consider the third case then $x_{ij} \ne const.$ therefore we can expect some periodic or chaotic behavior of the circuit, but

$$|y_{ij}(t)| \le |y_{ij}(0)|e^{-t} + \int_0^t |x_{ij}(t)|e^{-(t-\tau)}\, d\tau \le$$

$$\leq |y_{ij}(0)|e^{-t} + x_{max}(1 - e^{-t}) \Rightarrow$$
$$lim_{t\to\infty} y_{ij}(t) \to x_{max},$$

x_{max} is the estimation for the dynamic range of CNN and it is still a constant as it follows from the Theorem 1 [127].

Theorem is proved.

From Theorem 2.2 we may conclude that the output of the cellular neural networks with nonlinear dynamics (2.12), (2.13) will be always a constant.

As mentioned before, every cell in a cellular neural network has the same connections as its neighbors, because of the nearest neighbor interactive property, so we can understand the global properties of a cellular neural network by studying the local properties of a single cell.

We shall first define stable cell equilibrium points. Let us denote:

$$x_{ij}(t) \equiv x,\ y_{ij}(t) \equiv y,\ u_{ij} \equiv u.$$

Then we can write dynamical system (2.12), (2.13) in the following way:

$$\begin{aligned} \dot{x} &= -x + A(y) + B(u) + I \equiv F_1(x,y) + G(u,t), \\ \dot{y} &= -y + f(x) \equiv F_2(x,y). \end{aligned} \tag{2.16}$$

Then by definition the equilibrium points for the system (2.16) are these

$$F_1(x,y) + G(u,t) = 0\,, F_2(x,y) = 0.$$

Therefore

$$\begin{aligned} y^* &= f(x^*), \\ x^* &= R_x A(y^*) + R_x B(u) + R_x I. \end{aligned}$$

If $R_x(B(u) + I) = 0$, then

$$x^* = R_x A(f(x^*)).$$

Let $R_x = 1$

$$A = \begin{bmatrix} 0 & p_1 & 0 \\ p_2 & 2 & p_2 \\ 0 & p_1 & 0 \end{bmatrix}.$$

From the characteristic of the function f, it follows the following:

1). $f(x^*) = 0$, $x^* = c_2$,$x^* = 2$;

2). $f(x^*) = x^*$, $x^* = c_2 e^{x^*}$,$x^* = 2$,$x^* = 1/(1 - c_1 x^*)$. The only stable equilibrium point is $x^* = 2$.

3).$f(x^*) = 1$, $x^* = c_1$, $x^* = c_2 e$,$x^* = 2$.

If $B(u) + I = const.$ or

$$B(u) + I = \begin{bmatrix} 0 & 0 & 0 \\ c & 1 & c \\ 0 & 0 & 0 \end{bmatrix},$$

$$c = c_3 + I \, , \, R_x = 1,$$

then $x^* = A(f(x^*)) + B(u) + I$.

If we consider again these three cases we shall have:

1). $x^* = c_2 + c$,$x^* = 3$;

2). $x^* = 1/(1 - c_1 x^*)$,$x^* = c_2 e^{x^*} + c$,$x^* = 3$;

3). $x^* = c_1$,$x^* = c_2 e + c$,$x^* = 3$.

Let us summarize our above observation in the following theorem:

Theorem 2.3 *Each cell of our cellular neural network must settle at a stable equilibrium point after the transient has decayed to zero, if $x^*_{ij} < 0$ or $x^*_{ij} > 1$ and $\frac{dx_{ij}}{dt}|_{x_{ij}=x^*_{ij}} = 0$, $1 \leq i \leq M$,$1 \leq j \leq M$.*

Moreover, the magnitude of all stable equilibrium points is greater than 1. In other words we have:

$$lim_{t\to\infty}|x^*_{ij}(t)| > 1 \, , \, 1 \leq i \leq M, 1 \leq j \leq M,$$

and

$$lim_{t\to\infty} y_{ij}(t) = \{0, 1\} \, , \, 1 \leq i \leq M, 1 \leq j \leq M.$$

2.1.4 Dynamics and stability of a CNN with output equation of integro-differential type

Now let us consider the following dynamical system describing a CNN. As a state equation we shall take again one with nonlinear cloning templates:

$$\begin{aligned} \dot{x}_{ij} &= -x_{ij}(t) + \sum_{C(k,l)\in N_r(i,j)} A(y_{kl}(t), y_{ij}(t)) + \\ &\sum_{C(k,l)\in N_r(i,j)} B(u_{kl}, u_{ij}), \end{aligned} \tag{2.17}$$

$$1 \le i \le M, 1 \le j \le M,$$

We shall take A and B in the same form as in (2.12).

For the sake of generality we consider output equation of integro-differential type:

$$\dot{y}_{ij} = -y_{ij} + \int_0^1 f(x_{ij}(t))\, dt, \tag{2.18}$$

where $f(x)$ might be any smooth (C^1) strictly monotone-increasing sigmoid function [27].

$$f(x_{ij}(t)) = \begin{cases} 0, & x_{ij} < 0 \\ x_{ij}(t), & 0 \le x_{ij} \le 1 \\ 1, & x_{ij} > 1 \end{cases} .$$

The input equation is:

$$u_{ij} = E_{ij}\,,\ 1 \le i \le M, 1 \le j \le M. \tag{2.19}$$

where E_{ij} is an input source.

The initial and the boundary conditions are the following:

$$|x_{ij}(0)| \le 1, \tag{2.20}$$

$$|u_{ij}| \le 1. \tag{2.21}$$

$$|y_{ij}(0)| \le 1, \tag{2.22}$$

The proposed architecture of a CNN is quite general. The nonlinear cloning templates allow us to model some biological problems,

and also it can be used for modeling motion dynamics. The output equation (2.18) gives more possibilities for complex dynamics and interesting phenomena. It is very useful for the circuit layout and the software programmability of a CNN described above.

First of all, we shall give an estimate for the dynamic range of a CNN defined above.

Proposition 2.1 *For a CNN described by the bounded nonlinear cloning templates (2.17) and the special case of the output (2.18), all states x_{ij} are bounded for all $t > 0$ and the bound x_{max} can be computed by the following formula:*

$$x_{max} = 1 + max_{1 \leq i \leq M, 1 \leq j \leq N}[\sum_{C(k,l) \in N_r(i,j)} (max_t|A| + max_u|B|)] \tag{2.23}$$

Proof: Let us consider the state equation of a cell (2.17) in the form:

$$\dot{x}_{ij} = -x_{ij}(t) + F_{ijkl}(t) + G_{ijkl}(u), \tag{2.24}$$
$$1 \leq i \leq M\,,\, 1 \leq j \leq M,$$

where

$$F_{ijkl}(t) = \sum_{C(kl) \in N_r(ij)} A(y_{kl}(t), y_{ij}(t)),$$

$$G_{ijkl}(u) = \sum_{C(kl) \in N_r(ij)} B(u_{kl}(t), u_{ij}(t)),$$

Equation (2.24) is a first-order ordinary differential equation and its solution is [60]:

$$\begin{aligned} x_{ij}(t) &= x_{ij}(0)e^{-t} + \int_0^t e^{-(t-\tau)}[F_{ijkl}(\tau) + \\ &\quad +G_{ijkl}(u)]\, d\tau \end{aligned} \tag{2.25}$$

Therefore,

$$|x_{ij}(t)| \leq |x_{ij}(0)|e^{-t} + \int_0^t e^{-(t-\tau)}[|F_{ijkl}| +$$
$$+|G_{ijkl}(u)|]\, d\tau \leq |x_{ij}(0)|e^{-t} +$$
$$+[F + G] \int_0^t e^{-(t-\tau)}\, d\tau \leq$$

$$\leq |x_{ij}(0)| + [F + G],$$

where

$$F \equiv max_t|F_{ijkl}(t)| \leq \sum_{C(k,l)\in N_r(i,j)} max_t|A(y_{kl}, y_{ij}|,$$

$$G \equiv max_u|G_{ijkl}| \leq \sum_{C(k,l)\in N_r(i,j)} max_u|B(u_{kl}, u_{ij})|.$$

From the conditions (2.20), (2.21), (2.22), it follows that

$$|x_{ij}(t)| \leq 1 + [\sum_{C(k,l)\in N_r(i,j)} (max_t|A| + max_u|B|)], \tag{2.26}$$

$$1 \leq i, k \leq M\ ,\ 1 \leq j, l \leq M.$$

Now let

$$x_{max} = max_{(ij)}\{1 + \sum_{C(k,l)\in N_r(i,j)} (max_t|A| + max_u|B|)\}. \tag{2.27}$$

Then we have

$$max_t|v_{xij}| \leq x_{max}$$

for all $1 \leq i, k \leq M$, $1 \leq j, l \leq M$.

CNN defined mathematically by dynamical system (2.17)-(2.18) can operate in two modes: **transient mode** or dc **steady state mode**. In transient mode the output is the snapshot at a given time $t = T$. In the dc steady state mode the output is the dc steady state of the circuit. The following analogous stability theorem hold [139]:

Theorem 2.4 *For a CNN, described by the dynamical system (2.17)-(2.18), we always obtain a constant output after the transient has decayed to zero. In other words, we have*

$$lim_{t\to\infty} y_{ij}(t) = const.,\ 1 \leq i \leq M, 1 \leq j \leq M. \tag{2.28}$$

Let us define stable cell equilibrium points. We denote: $x_{ij}(t) \stackrel{\text{def}}{\equiv} x$,$y_{ij}(t) \stackrel{\text{def}}{\equiv} y$,$u_{ij} \stackrel{\text{def}}{\equiv} u$, $\sum_{C(k,l)\in N_r(i,j)} A(y_{kl}, y_{ij}) \stackrel{\text{def}}{\equiv} A(y)$, $\sum_{C(k,l)\in N_r(i,j)} B(u_{kl}, u_{ij}) \stackrel{\text{def}}{\equiv} B(u)$. Then, the following dynamical system is considered:

$$\begin{aligned} \dot{x} &= -x + A(y) + B(u) \equiv F_1(x, y) + G(u, t) \\ \dot{y} &= -y + \int_0^1 f(x(t))\, dt \equiv F_2(x, y). \end{aligned} \tag{2.29}$$

Definition 2.2 *Equilibrium points for the system (2.29) are those for which* $F_1(x,y) + G(u,t) = 0$ *and* $F_2(x,y) = 0$, *i.e.*

$$\begin{aligned} y^* &= \int_0^1 f(x^*(t))\,dt \\ x^* &= A(y^*) + B(u) \end{aligned} \tag{2.30}$$

We assume first that $B(u) = 0$, hence

$$x^* = A(\int_0^1 f(x^*(t))\,dt).$$

According to [58] the Jacobian matrix of an equilibrium point for the dynamical system (2.29) is $J = DF_1(x^*)$ and it can be computed by

$$J_{ij} = \frac{\partial F_i}{\partial x_j}|_{x=x^*}.$$

If all of the eigenvalues of J have negative real parts, the equilibrium point $x = x^*$ is *asymptotically stable.* On the other side, if one of the eigenvalues of J has a positive real part then the equilibrium point x^* is *unstable.* In general, if none of the eigenvalues of J have zero real part, then the equilibrium point x^* is *hyperbolic.*

From the sigmoid characteristic of $f(x^*)$,the following three cases are possible:

1). $f(x^*) = 0$ then the stable equilibrium points are $x^* = c_2$,$x^* = 2$ for $c_2 > 1$;

2). $f(x^*) = x^*$ and $x^* = const.$ the stable equilibrium point is $x^* = 2$;

3). $f(x^*) = 1$ then the stable equilibrium points are $x^* = c_1$, $x^* = c_2 e$,$x^* = 2$, for $c_1 > 1$, $c_2 > 1$.

For the case when $B(u)$ is with constant entries the results are analogous.

Therefore the following definitions are true:

Definition 2.3 Cell equilibrium state:

A cell equilibrium state x^*_{ij} *of a circuit* $C(i,j)$ *in a CNN with dc input* u_{kl} *is any value of the state variable* x_{ij} *which satisfies:*

(a) $\frac{dx_{ij}}{dt}|_{x_{ij}=x^*_{ij}} = 0$,

(b) $y_{kl} = \{0,1\}$,

for all neighbor cells $C(k,l) \in N_r(i,j)$.

Definition 2.4 Stable cell equilibrium states:

A cell equilibrium state, x^*_{ij}, of a cell circuit $C(i,j)$ is said to be stable iff

$$|x^*_{ij}| > 1.$$

Let us summarize the above observations:

Theorem 2.5 *Each cell of the general nonlinear CNN (2.17)-(2.18) must settle at a stable equilibrium point in its dc steady state, if $x^*_{ij} < 0$ or $x^*_{ij} > 1$ and $\frac{dx_{ij}}{dt}|_{x_{ij}=x^*_{ij}} = 0, 1 \leq i \leq M, 1 \leq j \leq M$.*

Moreover, the magnitude of all stable cell equilibrium points is greater than 1, i.e.

$$lim_{t\to\infty}|x^*_{ij}(t)| > 1\,,\ 1 \leq i \leq M, 1 \leq j \leq M.$$

and

$$lim_{t\to\infty}y_{ij}(t) = \{0,1\}\,,\ 1 \leq i \leq M, 1 \leq j \leq M.$$

Now we shall define stable system equilibrium points for our CNN which give its global dynamic behavior.

Definition 2.5 Stable system equilibrium points :

A stable system equilibrium point of a CNN described by the dynamical system (2.17)-(2.18) is a state vector with components, x^*_{ij}, which are stable cell equilibrium points defined above.

Remark 2.2 Since any stable system equilibrium point is a limit point of a set of trajectories of the corresponding system of differential and integro-differential equations (2.18), such an attracting limit point is said to have a basin of attraction [58].

2.1.5 Topological degree analysis of a nonlinear CNN

As we can see form the above examples one fundamental problem in studying CNN is the analysis of the number, location and stability of equilibrium points. Here we explore the application of topological degree methods (see Appendix A) to analyze the equilibrim points for the vector fields defining the CNN.

We consider the following model of a nonlinear CNN:

$$\frac{dx}{dt} = -x(t) + A(g(x)) + Bu + I, \tag{2.31}$$

where the cell state vector $x \in R^n$, $n = M.M$, and $x_k \stackrel{def}{=} v_{xij}$, $1 \leq i \leq M, 1 \leq j \leq M$,

$$A(g) = \begin{bmatrix} g_{11} & \cdots & g_{1n} \\ \vdots & & \\ g_{n1} & \cdots & g_{nn} \end{bmatrix},$$

$$g_{kl} = \hat{a}_{kl} y_k y_l^{\alpha},\ \alpha \in N,\ 1 \leq k, l \leq n,$$

$y = f(x)$ is the output function. With u we denote the input of the network, I is the offset of cells, B is usually a spares matrix containing the template coefficients at proper places, and they are assumed to be constant.

According to the usual assumptions on the neuron activations, we require that $y = f(x)$ belongs to the class of sigmoidal functions, defined by the property that y_i are bounded (in our case $|y_i| \leq 1$) and increasing functions (Fig. 11).

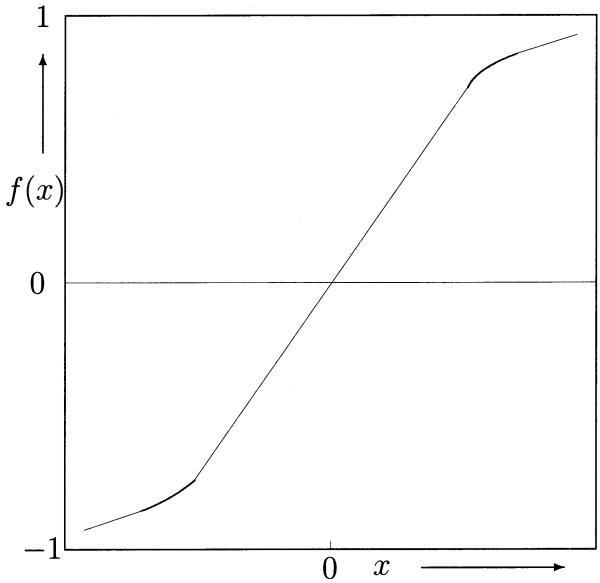

Fig.11. Sigmoidal output function $y = f(x)$.

In the spirit of earlier results concerning nonlinear resistive networks [26,46,56], the concept of degree theory is here exploited to highlight some fundamental properties of CNN model (2.31). In the case of continuously differentiable vector fields, interesting dynamic properties are established [34]. Further informations are also obtainable concerning the eigenvalues of Jacobian matrices evaluated at equilibria. Such results give insight into geometrical structure of the vector field that defines the CNN model and into the phase portrait.

Stability of the equilibrium points of a CNN

First of all we shall define **structural stability** of the equilibrium points of CNN model (2.31):

Definition 2.6 *An equilibrium point of a CNN (2.31) is a point* $\bar{x} \in R^n$ *such that*

$$F(\bar{x}) = -\bar{x} + A(g(\bar{x})) + Bu + I = 0. \tag{2.32}$$

The associated linear system to (2.32) in the sufficient small neighbourhood of an equilibrium point can be given by

$$\frac{dz}{dt} = DF(\bar{x})z, \tag{2.33}$$

where $z = x - \bar{x}$, and $DF(\bar{x}) = J_F$ is the Jacobian matrix of the equilibrium point and it can be computed by

$$J_F = \frac{\partial F}{\partial x}|_{x=\bar{x}}$$

or

$$J_F = -I_d + \frac{\partial A}{\partial x} \tag{2.34}$$

I_d- is the identity matrix.

The hypothesis of boundedness of the output $y = f(x)$ implies that the vector field $F(\bar{x}) : R^n \to R^n$ is a C^1 mapping. Let D be a bounded, open subset of R^n, ∂D denotes the boundary of D, $\bar{D}$ denotes the closure of D; $C(\bar{D})$ refers to the space of all continuous functions defined on $\bar{D}$ that map into R^n.

Definition 2.7 *The index of an equilibrium point $\bar{x}$ of $F(x)$, $I_F(\bar{x})$ is given by:*

$$\begin{cases} +1, & if\ |\frac{\partial F}{\partial x}|_{\bar{x}} > 0, \\ 0, & if\ |\frac{\partial F}{\partial x}|_{\bar{x}} = 0, \\ -1, & if\ |\frac{\partial F}{\partial x}|_{\bar{x}} < 0 \end{cases} \tag{2.35}$$

Definition 2.8 *The degree of F with respect to D, $d(F, 0, D)$, is defined as the algebraic number of solutions of $F(x) = 0$, that is*

$$d(F, 0, D) = \sum_{\bar{x} \in D} I_F(\bar{x}) \tag{2.36}$$

Now we shall give a definition for a structurally stable equilibrium point, because only structurally stable equilibria have a physical meaning in the CNN circuits. The structurally unstable equilibrium point are physically unobservable and cannot be employed, for example as memory locations in an associative memory.

Definition 2.9 *An equilibrium point $\bar{x}$ of F is said to be* **structurally stable** *if for any $\varepsilon > 0$, there exists $\delta > 0$ such that there is at least one equilibrium point in the set $\{x : ||x - x^*|| < \varepsilon\}$ for any $F_\delta \in C(\bar{D})$ with $||F_\delta - F|| < \delta$.*

Property 2.1 *An isolated equilibrium point is structurally stable if and only if its index is nonzero.*

Proof of this property is given in [46].

Property 2.2 *If the Jacobian J_F of F is nonsingular at any equilibrium point of (2.31), then (2.31) has an odd number of structurally stable equilibrium points.*

Remark 2.3 The interesting consequence of Property 2.1 is that there is at least one equilibrium point for the CNN.

Proof: For $R > 0$, let $B(R)$ denote the sphere $B(R) = \{x \in R^n : ||x|| < R\}$, and let $\bar{B}(R)$ be the closure of $B(R)$, $\partial B(R)$ denote the boundary of $B(R)$.

Since the Jacobian is nonsingular at any equilbrium point, it follows that the equilibrium points are isolated. Consider from the proof of Theorem 13.1 [34] that there is no equilibrium point outside the sphere $B(R)$. Then, because of the compactness of $\bar{B}(R)$ we get that there is a finite number of equilibrium points of (2.31). From definition 2.7 the index I_F of an isolated equilibrium point $\bar{x}$ is actually

$$I_F(\bar{x}) = sgn\, det J_F(\bar{x}) \tag{2.37}$$

Therefore due to the fact that $J_F(\bar{x})$ is nonsingular, I_F is equal to either +1 or -1. Moreover, it is structurally stable from Property 2.1.

According to the definition 2.8, $d(F, 0, B(R))$ is the following:

$$d(F, 0, B(R)) = \sum_{\bar{x} \in B(R)} I_F(\bar{x}) =$$

$$= \sum_{\bar{x} \in B(R)} sgn\, det J_F(\bar{x}) = (-1)^n,\ n = M.N,$$

which follows from Theorem 13.1 [34].

Let assume that n is even, so $d(F, 0, B(R)) = +1$. According to the Property 2.1 every structurally stable equilibrium point has an index +1 or -1. Suppose that our CNN possesses s structurally stable equilibrium points, p of which have index +1, and q of which have index -1. Then

$$(*) \qquad p + q = s,$$

and since $d(F, 0, B(R)) = +1$

$$(**) \qquad p - q = 1.$$

Adding (*) and (**) we have

$$2p = s + 1$$

proving that s must be odd. Analogous results can be obtained in the case when n is odd.

Now we shall prove that if there are $2m + 1$ (odd) number of structurally stable equilibrium points, m of them are unstable, and the rest $m + 1$ are either stable or unstable.

Because of the uniform piecewise-linear nonlinearity in each cell of a CNN it is meaningful to divide the n-dimensional Euclidean space into different types of regions (Fig.12). Our new approach is that we can specify the number of stable and unstable equilibrium points in each region.

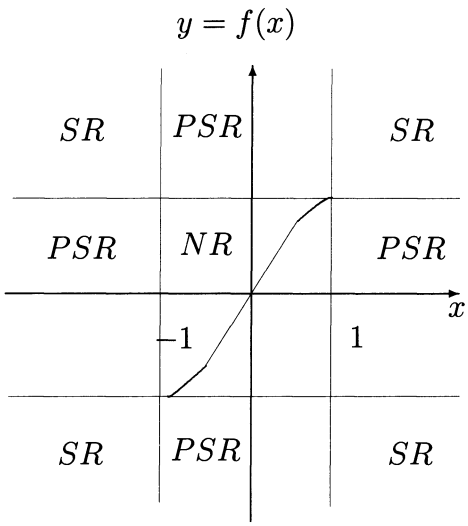

Fig. 12. SR - stability region, NR - nonlinear region
PSR - partial stability region.

First of all, let us give a definition of the different regions.

Definition 2.10 Stability region - *A CNN defined by (2.31) is said to be operating in a stability region (SR) if all its state variables satisfy*

$$SR = \{x \in R^n; |x_i| \geq 1, \; for \, i = 1, \ldots, n\} \tag{2.38}$$

and every state variable in this region has the same sign, i.e. if $x_1 \in SR$, $x_2 \in SR$, $f(x_1) - f(x_2) = 0$.

Definition 2.11 Nonlinear region - *A CNN defined by (2.31) is operating in nonlinear region (NR) if*

$$NR = \{x \in R^n; |x_i| < 1, \; for \, i = 1, \ldots, n\}. \tag{2.39}$$

It is obvious that the nonlinear region is a hypercube which is centered around the origin (Fig. 12).

Definition 2.12 Partial stability region - *Let $N = \{1, 2, \ldots, n\}$, $P \subset N$, $Q = N/P$, with $P \neq \emptyset$, $Q \neq \emptyset$. A CNN defined by (2.31) is working in partial stability region (PSR) if all state variables satisfy*

$$PSR = \{x \in R^n; |x_i| \geq 1,\ |x_i| < 1, i \in P,\ j \in Q\} \tag{2.40}$$

and they should have the same sign in this region, or in other words, if $x_1 \in PSR$, $x_2 \in PSR$, $i \in P$, then $f(x_{1i}) - f(x_{2i}) = 0$.

There are totally 3^n regions since every state space is divided by the output function $y = f(x)$ into three pieces. The number of stability regions is 2^n (because every x_i can be negative or positive). Therefore the total number of partial stability regions is $3^n - 2^n - 1$.

Theorem 2.6 *In one stability region (SR) there is at most only one equilibrium point.*

Proof of this theorem follows from the proof of Property 2.2.

Theorem 2.7 *If the Jacobian matrix J_H is nonsingular at any equilibrium point in SR, then m of $2m + 1$ structurally stable equilibrium points are stable.*

Proof: In SR we have $y = f(x) = const. = \pm 1 \Rightarrow \frac{\partial A}{\partial x} = 0 \Rightarrow J_F = -I_d$ for $\forall \bar{x} \in SR$. Recall that for a given equilibrium point $\bar{x}$

$$I_F = sgn\, det\, J_F(\bar{x}) = sgn(\lambda_1, \lambda_2 \ldots . \lambda_n), \tag{2.41}$$

where λ_i are the eigenvalues of $J_F(\bar{x})$. Since $sgn\, det\, J_F(\bar{x})$ is negative, therefore $I_F = -1$. If we assume that n is even it easily follows from the proof of Property 2.2 that there are m of all $2m+1$ structurally stable equilibrium points with index -1. Therefore eigenvalues of the equilibrium point $\bar{x}$ are negative, that means that it is stable equilibria. Analogous result we can get for n odd. Theorem is proved.

Theorem 2.8 *In NR and PSR there are $m + 1$ either unstable or stable equilibrium points.*

Proof: In NR and PSR, $|x| < 1$ and $|x| > 1$ we have $|\frac{\partial A}{\partial x}| > 1$. Therefore, $sgn\, det\, J_F(\bar{x})$ is positive. From (2.41) it follows that $I_F =$

1. Similar to the proof of the Theorem 2.7 we obtain that $J_F(\bar{x})$ has an even number of real negative eigenvalues. Hence, it also has an even number of real positive eigenvalues. Such equilibrium points may be stable, or unstable. Theorem is proved.

Remark 2.4 The above results give an information about the geometric structure of the vector field defining CNN model by showing basic qualitative properties of the equilibrium configuration.

Remark 2.5 Main results (Theorem 2.7 and 2.8) imply that almost half of the CNN equilibrium points are unstable.

Remark 2.6 Our approach of dividing the Euclidean space into three different regions - SR,NR and PSR, is very important for the formation of the boundaries of the attraction domain for the stable equilibria.

Remark 2.7 In our case the output function $y = f(x)$ is sigmoidal function. Our future work will focus on the different output functions, such as hysteresis, exponential-type, etc. In these cases functions g won't be bounded and therefore they won't be homotopic to odd fields. So we have to possess some conditions on these functions in order to apply the degree theory approach in stability analysis.

2.2 CNN with delay

Let us consider the state equation of a delay CNN of $M \times M$ cells:

$$\dot{x}(t) = -x(t) + A_0 y(t) + A_1 y(t-\tau) + Bu(t) + I, \tag{2.42}$$

where the state vector x is produced by lining up every row of the cell states in a sequence, i.e. $x \in \mathbf{R}^{M.M}$. For delay CNNs, the space invariance property is expressed by

$$\begin{aligned} A(i,j;k,l) &= A(i-k, j-l) \\ B(i,j;k,l) &= B(i-k, j-l) \\ A^{\tau}(i,j;k,l) &= A^{\tau}(i-k, j-l). \end{aligned}$$

Matrices A_0 and A_1 can be easily calculated from the cloning templates and delay cloning template.

Assume that the input u is a constant, so that (2.42) represents an autonomous functional differential equation and we have the following definition of complete stability:

Definition 2.13 *An autonomous dynamical system, described by the functional differential equation:*

$$\dot{x}(t) = f(x_t), \tag{2.43}$$

$x_t \in C([-\tau, 0], R^n)$, $f \in C([-\tau, 0], R^n) \rightarrow R^n$ *is said to be completely stable if for each initial condition* $x_0 \in C([-\tau, 0], R^n)$*:*

$$lim_{t \rightarrow +\infty} x(t, x_0) = const. \tag{2.44}$$

where $x(t, x_0)$ *is the trajectory starting from* x_0.

In [51] the following theorem is stated:

Theorem 2.9 *A sufficient condition for the complete stability of a delay CNN, described by equation (2.42) is that:*

i). there exists a positive diagonal matrix D*, such that the product* DA_0 *and* DA_1 *are symmetric matirces;*

ii). $||A_1|| < \frac{2}{3\tau}$.

Proof: Assume that $u = 0$, $I = 0$. The complete stability can be proved by the use of the following Lyapunov function:

$$V(x_t) = y'(t)Py(t) - \int_{-\tau}^{0} [y'(t+\Theta) - y'(t)]A_1' F(\Theta)A_1[y(t+\Theta) - y(t)]d\Theta, \tag{2.45}$$

where $P = D(A_0 + A_1 - I)$ is a symmetric matrix , $F(\Theta) = Df(\Theta)$ and $f(\Theta)$ is any scalar function, continuous with its derivative on $[-\tau,]]$, $f \in C^1([-\tau, 0], R)$.

The following lemmas shall be useful for the proof:

Lemma 2.1 *If* $||A_1|| < \frac{2}{3\tau}$ *then there exists a function* $f(\Theta)$ *such that* $\dot{V}(x_t) \geq 0$, $\forall t$.

The proof of this lemma can be found in [51].

Lemma 2.2 $V(x_t)$ *is bounded for every* $t \geq 0$.

Proof: The integral in the Lyapunov function (2.45) is taken over a finite interval, and the integrand function depends only on the output vector y, whose components are bounded. Therefore $V(x_t)$ is bounded for every $t \geq 0$ too.

Lemma 2.3 *For each* $\Theta \in [-\tau, 0]$ *the following statement is valid:*

$$lim_{t \to +\infty} A_1[y(t + \Theta) - y(t)] = 0.$$

The proof is similar as the proof of the Lemma 3 in [51].
We can rewrite equation (2.42) in the following way:

$$\dot{x}(t) = -x(t) + [A_0 + A_1]y(t) + A_1[y(t - \tau) - y(t)]. \tag{2.46}$$

CNN characterized by the state equation:

$$\dot{x}(t) = -x(t) + [A_0 + A_1]y(t) \tag{2.47}$$

is completely stable, because there exists a positive diagonal matrix D such that $D(A_0 + A_1)$ is symmetric [51].

From Lemma 2.3 we have that $lim_{t \to +\infty} A_1(y(t - \tau) - y(t)) = 0$ which means that (2.46) and (2.47) have the same asymptotic solutions. Then (2.42) is also completely stable system.

According to Theorem 2.9 the main conditions for complete stability of delay CNN are: 1). existence of a positive matrix D such that DA_0 and DA_1 are symmetric and 2). $||A_1|| \leq \frac{2}{3\tau}$. The following theorem shows how the above conditions can be checked directly on the cloning template A^0 and the delay cloning template A^1.

Theorem 2.10 *If the cloning template A^0 and the delay cloning template A^1 of a delay CNN, described by (2.42) are such that :*

i). two couples of entries satisfy $\frac{A^0_{r,s}}{A^0_{-r,-s}} = \frac{A^1_{r,s}}{A^1_{-r,-s}} > 0$ and $\frac{A^0_{t,w}}{A^0_{-t,-w}} = \frac{A^1_{t,w}}{A^1_{-t,-w}} > 0$ with $rw - ts \neq 0$

ii). all the other couples of entries different from zero satisfy:

$$\frac{A^i_{n,m}}{A^i_{-n,-m}} = (\frac{A^i_{r,s}}{A^i_{-r,-s}})^p(\frac{A^i_{t,w}}{A^i_{-t,-w}})^q, i \in \{0,1\}$$

with $p = \frac{wn-tm}{rw-ts} q = \frac{rm-sn}{rw-ts}$ and

iii). the sum of the moduli of the elements of the delay cloning template A_1 are less than $\frac{2}{3\tau}$;

then the network is completely stable.

Remark 2.8 Conditions i), ii) ensure that there exists a matrix D such that DA_0 and DA_1 are symmetric. Condition iii) guarantees that the norm of the matrix A_1 is less than $\frac{2}{3\tau}$.

Let us consider an $M \times M$ delay-type CNN with nonlinear templates described by the state equations:

$$\begin{aligned}
\dot{x}_{ij}(t) &= -x_{ij}(t) + \sum_{C(k,l)\in N_r(i,j)} \hat{A}_{ij,kl}(y_{kl}(t), y_{ij}(t)) + \quad (2.48)\\
&+ \sum_{C(k,l)\in N_r(i,j)} A^{\tau}_{ij,kl} y_{kl}(t - \tau^A_{ij,kl})\\
&+ \sum_{C(k,l)\in N_r(i,j)} \hat{B}_{ij,kl}(u_{kl}(t), u_{ij}(t))\\
&+ \sum_{C(k,l)\in N_r(i,j)} B^{\tau}_{ij,kl} u_{kl}(t - \tau^B_{ij,kl}) + I
\end{aligned}$$

where $\tau^A_{ij,kl}, \tau^B_{ij,kl} \geq 0$ for all i, j, k, l and generally are space invariant. We assume piece-wise linear output $y_{ij}(t) = f(x_{ij}(t))$. Let us rewrite state equations (2.48) in the vector form:

$$\dot{x} = F(t, x_t) = -x(t) + \tilde{A}_{nl}(f_1(x(t))) + \tilde{A}^\tau f_2(x(t-\tau)) \quad (2.49)$$
$$+\tilde{B}_{nl}(u(t)) + \tilde{B}^\tau u(t-\tau) + \tilde{I}$$

$f_1(x(t))$ is defined as $(f_1(x))_i = f(x_i)$; $\tilde{A}^\tau f_2(x(t-\tau))_i = \sum_{k=1}^n (\tilde{A}^\tau)_{ik} f(x_k(t-\tau^A_{ik}))$, $n = M.M$, $\tilde{B}^\tau u(t-\tau)_i = \sum_{k=1}^n (\tilde{B}^\tau)_{ik} u_k(t-\tau^B_{ik})$.

Assume that $\hat{A}$ and $\hat{B}$ are continuous, and define

$$A^{max}_{ij,kl} = sup_{(x,y)\in[-1,1]^2} \hat{A}_{ij,kl}(x,y) < \infty \quad (2.50)$$

$$B^{max}_{ij,kl} = sup_{(x,y)\in[-1,1]^2} \hat{B}_{ij,kl}(x,y) < \infty \quad (2.51)$$

Define $\tau = max_{ij}\tau^A_{ij}$ to be the maximal delay and define $C_\tau = C([-\tau, 0], R^n)$ to be the set of continuous functions into R^n defined on the interval $[-\tau, 0]$. The function $x_t \in C_\tau$ is defined as $x_t(s) = x(t+s)$, $s \in [-\tau, 0]$. The initial condition is given by: $x_{ij}(t) = x^0_{ij}(t)$, $t \in [-\tau, 0]$ and we will assume that $x^0_{ij}(t)$ is a continuous function. Then the following propositions hold [118]:

Proposition 2.2 *If a CNN with nonlinear and delay-type A-template satisfies*

i). $A\tilde{A}_{nl}(x)$ is an off-diagonally nonegative matrix for all $x \in [-1,1]^n$;

ii). $\tilde{A}^\tau$ is a nonegative matrix;

iii). $D\tilde{A}_{nl}(x) + \tilde{A}^\tau$ is an irreducible matrix for all $x \in [-1,1]^n$;

iv). the set of equilibria is finite,

then the union of the basins of attraction of all stable equilibrium points will be a dense open set in $\Pi^n_{i=1} C([-\tau_i, 0], R)$, where $\tau_i = max_j \tau^A_{ji}$.

Remark 2.9 This proposition implies that there are no stable limit cycles or strange attractors. For each set of initial conditions, there exists an arbitrary small perturbation such that the trajectory will converge towards an equilibrium point.

Proposition 2.3 *Given the initial condition*

$$x_0(t) = \varphi(t), \varphi(t) \in C_\tau$$

then the nonlinear delay type CNN has a unique solution for $t \in [0, \infty)$.

Proposition 2.4 *If the initial condition is bounded* K*, then all states* x_{ij} *of a nonlinear delay type CNN are bounded for all time in absolute value by the sum:*

$$x_{max} = K + |I| + max_{ij}(\sum_{kl}(|A^\tau_{ij,kl}| + |\hat{A}^{max}_{ij,kl}| + |B^\tau_{ij,kl}| + |\hat{B}^{max}_{ij,kl}|))$$

and the ω*-limit points of* $x_{ij}(t)$ *are bounded in absolute value by* $x_{max} - K$*. Thus for all* $\varepsilon > 0$*,* $x_{ij}(t)$ *will eventually be bounded in absolute value by* $\varepsilon + x_{max} - K$*.*

The extension of the results in [80] is given by the following theorem [118]:

Theorem 2.11 *Assume that a finite Lipschitz constant* L *exists such that* $|A_{nl}(x) - \tilde{A}_{nl}(y)| \leq L|x - y|$ *for all* $x, y \in [-1, 1]^n$*. If a nonlinear delay type CNN satisfies* $L + |\tilde{A}^\tau| < 1$*, then the delay type and nonlinear CNN in (2.48) contains a globally, asymptotically stable equilibrium point.*

Proof: It is known that an equilibrium point $x^*(t) = x^*$ must satisfy

$$x^* = \tilde{A}_{nl}(f_1(x^*)) + \tilde{A}(f_2(x^*)) + g = T(x^*)$$

where $g = \tilde{B}_{nl}(u) + \tilde{B}^\tau(u) + \tilde{I}$. Since x^* is a fixed point of the contraction T, it is the unique equilibrium of the system and it exists. We make change of variables $z = x - x^*$ and define the following Lyapunov function:

$$V(z) = \frac{1}{2} < z, z > .$$

The derivative of the above Lyapunov function along the solutions is

$$\dot{V}(z) =< \dot{z}(t), z(t) >=< \dot{x}(t), z(t) >$$

$$=< -z(t)-x^*+\tilde{A}_{nl}(f_1(z(t)+x^*))+\tilde{A}^\tau(f_2(z(t-\tau)+x^*))+g, z(t) >$$
$$=< -z(t)+\tilde{A}_{nl}(f_1(z(t)+x^*))-\tilde{A}_{nl}(f_1(x^*))+\tilde{A}^\tau(f_2(z(t-\tau)+x^*)$$
$$-f_2(x^*)), z(t) > .$$

We choose the nonlinearity

$$|f_1(z(t)+x^*)-f_1(x^*)| \leq |z(t)|$$
$$|\tilde{A}^\tau f_2(z(t-\tau)+x^*)-\tilde{A}^\tau f_2(x^*)| \leq |\tilde{A}^\tau||z_t|.$$

So we have

$$\dot{V}(z) \leq -|z(t)|^2 + L < z(t), z(t) > +|\tilde{A}^\tau||z(t)||z_t|$$
$$\leq (-1+L+\rho|\tilde{A}^\tau|)|z(t)|^2 \leq 0$$

for all $|z_t| < \rho|z(t)|$, where $\rho > 1$ is a real number such that $-1 + L + \rho|\tilde{A}^\tau| < 0$. Then by the Razumikhin type theorem [61] the equlibrium point $z = 0$ is a global attractor. Therefore $x = x^*$ is a global attractor of (2.48).

Remark 2.10 According to the above theorem if the elements of the templates $\hat{A}$ and A^τ are small enough, then the CNN will always converge to the unique equilibrium point. Note that because of the cellular and space invariant structure of the template, $|\tilde{A}|$, L, and $|\tilde{A}^\tau|$ do not depend on the size of the cell array.

2.3 Examples

1.Let us consider a two-dimensional grid with 3×3 neighborhood system described by the following dynamical system as an example for perturbed nonlinear CNN:

$$\begin{aligned} \dot{x} &= -x + \mu A(y), \\ \dot{y} &= -y + \int_0^1 f(x)\, dt \end{aligned} \tag{2.52}$$

with $B(u) = 0$,

$$A = \begin{bmatrix} 0 & p_1 & 0 \\ p_2 & 2 & p_2 \\ 0 & p_1 & 0 \end{bmatrix}, \mu = 0.1.$$

we get the following results [139], the tolerance is $\delta = 10^{-20}$ and the initial conditions are:

$y(0) =$

0.8	0.7	1.0
1.0	1.0	1.0
-0.1	0.8	-0.1

$x(0) =$

-0.9	-1.0	1.0
-1.0	1.0	-1.0
0.9	0.8	1.0

then we obtain the following state equilibrium points by using ODEX [63]:

$y^* =$

-0.56	-0.2	0.61
0.61	0.61	0.61
0.25	-0.56	0.25

$x^* =$

-0.12	-0.62	0.62
-3.94	2.02	-3.98
0.12	-0.56	0.62

The tolerance is $\delta = 10^{-20}$.

Remark 2.11 The actual stable state equilibrium points attained by each cell clearly depends on its initial state (as well as those of its neighbor cells). But, even the initial conditions are very different their corresponding final states are virtual identical.

2.As a second example we shall consider Fitz-Hugh nerve impulse transmition model [74]:

$$\begin{aligned} \frac{\partial^2 u}{\partial x^2} &= \frac{\partial u}{\partial t} - u(1-u)(u-a) + w, \\ \frac{\partial w}{\partial t} &= bu - \gamma w, \end{aligned} \tag{2.53}$$

where $a, b, \gamma > 0$, $0 < a < 1$, u-represents membrain potential E, x - measures distance along the axon and t is time.

Without lost of generality we can consider the same problem in the following way:

$$\begin{aligned} \dot{x}_1 &= -x_1(x_1-a)(x_1-1) - x_2 + qH(t) = F_1(x_1,x_2), \\ \dot{x}_2 &= bx_1 - \gamma x_2 = F_2(x_1,x_2), \end{aligned} \tag{2.54}$$

where $0 < a < 1$, $\gamma > 0$, $b > 0$, $q = const.$, $H(t)$ is a Heaviside function, such that

$$\begin{cases} H(t) = 0 & for \quad t < 0, \\ H(t) = 1 & for \quad t \geq 0. \end{cases}$$

We denote by x_1 the responce, x_2 - recovery variable, and q is stimulus [74]. By definition the equilibrium points $\bar{x}_1$, $\bar{x}_2$ satisfy

$$\begin{aligned} F_1(\bar{x}_1,\bar{x}_2) &= -\bar{x}_1(\bar{x}_1-a)(\bar{x}_1-1) - \bar{x}_2 + qH(t) = 0, \\ F_2(\bar{x}_1,\bar{x}_2) &= b\bar{x}_1 - \gamma\bar{x}_2 = 0. \end{aligned} \tag{2.55}$$

The Jacobian matrix for the above system is:

$$J_F = \begin{bmatrix} -3x_1^2 + 2(a+1)x_1 - a & -1 \\ b & -\gamma \end{bmatrix}.$$

A complete phase plane analysis of the system (2.53) is quite difficult due to the fact that it is a third-order system. If $q = 0$, we will consider the special case when $b = 0$. So, in this relation we have $x_2 = 0$ and therefore we get that the equilibrium points of the system (2.55) are $(0,0)$, $(a,0)$ and $(1,0)$.

$$det\, J_F(0,0) = \begin{bmatrix} -a & -1 \\ 0 & -\gamma \end{bmatrix} = a\gamma > 0.$$

Hence, the equilibrium point (0,0) is unstable.

$$det\, J_F(a,0) = \gamma a(a-1) < 0,\ 0 < a < 1.$$

Therefore, the equilibrium point $(a,0)$ is structurally stable.

$$det\, J_F(1,0) = -\gamma(a-1) > 0,\ 0 < a < 1,$$

and the equilibrium point $(1,0)$ is unstable.

The general conclusion is that we have only one structurally stable equilibrium point of our system (2.53). According to (2.41) we have

$$I_F(a,0) = sgn\, det\, J_F(a,0) = sgn \sum_{i=1}^{4} \lambda_i = -1.$$

This means that we have either one or three positive eigenvalues λ_i therefore the equilibrium point $(a,0)$ which is in NR is unstable.

Now we shall prove that in the case $q = 0$, $b \neq 0$ we have periodic solutions of the following autonomous system:

$$\begin{aligned} \dot{x}_1 &= -x_1(x_1 - a)(x_1 - 1) - x_2, \\ \dot{x}_2 &= bx_1 - \gamma x_2. \end{aligned} \tag{2.56}$$

One of the most powerful methods for studying periodic solutions in autinomous nonlinear systems is is the theory based on a Hopf-like bifurcation theorem [58]. Obviously the system (2.53) has always an equilibrium point $(0,0)$. Then the Jacobian matrix is

$$J_F(0,0) = \begin{bmatrix} -a & -1 \\ b & -\gamma \end{bmatrix} = a\gamma + b.$$

Suppose that $\gamma \leq 3(a^2 - a + 1)^{-1}$, therefore there is a critical value q_0 of q such that Poincare-Andronov-Hopf bifurcation [58] occurs at q_0. It is easy, further, to discuss the stability of resulting periodic orbits at this equilibrium point.

3. Consider a delay CNN such that both the cloning template A^0 and the delay cloning template A^1 are 3×1 linear:

$$A^0 = [A^0_{-1}, A^0_0, A^0_1]; A^1 = [A^1_{-1}, A^1_0, A^1_1]; \tag{2.57}$$
$$\frac{A^0_{-1}}{A^0_1} = \frac{A^1_{-1}}{A^1_1} > 0$$

It is easily verified that in such a case there exists a positive diagonal matrix D such that DA_0 and DA_1 are symmetric; it is sufficient to assume $D = diag\{d_i\}$ such that:

$$\frac{d_{i+1}}{d_i} = \frac{A^0_1}{A^0_{-1}} = \frac{A^1_1}{A^1_{-1}}$$

By applying Theorem 2.9, if

$$||A_1|| = |A^1_{-1}| + |A^1_0| + |A^1_1| \leq \frac{2}{3\tau}$$

the network is completely stable.

Then we study a delay CNN characterized by the following 3×3 templates:

$$A^0 = \begin{bmatrix} 0 & A^0_{-1,0} & 0 \\ A^0_{0,-1} & A^0_{0,0} & A^0_{0,1} \\ 0 & A^0_{1,0} & 0 \end{bmatrix},$$

$$A^1 = \begin{bmatrix} 0 & A^1_{-1,0} & 0 \\ A^1_{0,-1} & A^1_{0,0} & A^1_{0,1} \\ 0 & A^1_{1,0} & 0 \end{bmatrix}$$

with

$$\frac{A^0_{0,1}}{A^0_{0,-1}} = \frac{A^1_{0,1}}{A^1_{0,-1}} > 0, \frac{A^0_{-1,0}}{A^0_{1,0}} = \frac{A^1_{-1,0}}{A^1_{1,0}} > 0$$

By applying Theorem 2.10 it is derived that, if

$$||A_1|| = |A^1_{0,1}| + |A^1_{0,-1}| + |A^1_{0,0}| + |A^1_{1,0}| + |A^1_{-1,0}| \leq \frac{2}{3\tau}$$

the network is completely stable.

Finally we consider a delay CNN characterized by the following 3×3 templates:

$$A^0 = \begin{bmatrix} A^0_{-1,-1} & A^0_{-1,0} & A^0_{-1,1} \\ A^0_{0,-1} & A^0_{0,0} & A^0_{1,1} \\ A^0_{1,-1} & A^0_{1,0} & A^0_{1,1} \end{bmatrix}$$

$$A^1 = \begin{bmatrix} A^1_{-1,-1} & A^1_{-1,0} & A^1_{-1,1} \\ A^1_{0,-1} & A^1_{0,0} & A^1_{0,1} \\ A^1_{1,-1} & A^1_{1,0} & A^1_{1,1} \end{bmatrix}$$

such that

$$\frac{A^0_{0,1}}{A^0_{0,-1}} = \frac{A^1_{0,1}}{A^1_{0,-1}} > 0, \frac{A^0_{-1,0}}{A^0_{1,0}} = \frac{A^1_{-1,0}}{A^1_{1,0}} > 0$$

$$\frac{A^0_{1,1}}{A^0_{-1,-1}} = \frac{A^1_{1,1}}{A^1_{-1,-1}} = \frac{A^0_{1,0}}{A^0_{-1,0}} \frac{A^0_{0,1}}{A^0_{0,-1}}$$

$$\frac{A^0_{1,-1}}{A^0_{-1,1}} = \frac{A^1_{1,-1}}{A^1_{-1,1}} = \frac{A^0_{1,0}}{A^0_{-1,0}} (\frac{A^0_{0,1}}{A^0_{0,-1}})^{-1}$$

By applying Theorem 2.10 it is derived that, if

$$||A_1|| = |A^1_{0,1}| + |A^1_{0,-1}| + |A^1_{0,0}| + |A^1_{1,0}| + |A^1_{-1,1}| \leq \frac{2}{3\tau}$$

the network is completely stable.

The stability of the three classes of templates above is known only in the symmetric case [29], in the case in which the elements of both cloning templates are positive [119] and in the cases reducible to this latter by means of the state transformations shown in [25].

The conditions of stability given by Theorem 2.10 do not depend on the sign of $A^1_{0,0}$, but only on its absolute value that appears into the norm of the matrix A_1.

3 Hysteresis and Chaos in CNNs

3.1 CNNs with hystersis in the feedback system

Although the typical CNN [27] does not oscilate and becomes chaotic, one can expect interesting phenomena - bifurcations, and complex dynamics to occur. Moreover, because of the applications of CNN, it will be interesting to consider a special type of memory-based relation between an input signal and an output signal in this circuit. The main goal of this chapter is to model and investigate such relation, called hysteresis [154] for a CNN.

Consider a CNN in the case when the nonlinearity in the feedback system is allowed to exibit hysteresis [128]:

$$\begin{aligned} \frac{dx_{ij}}{dt} &= -x_{ij} + \sum_{C(k,l)\in N_r(i,j)} A_{ij,kl} h(x_{kl}) + \\ &\quad \sum_{C(k,l)\in N_r(i,j)} B_{ij,kl} u_{kl}, \\ &\quad 1 \le i \le M\,,\ 1 \le j \le M, \end{aligned} \tag{3.1}$$

x, y and u refer to the state, output and input voltage of a cell $C(i,j)$; A and B, called feedback and control operators, respectively, are usually sparse matrices with a bounded structure containing the template coefficients at proper places. The hysteresis $h(x_{ij})$ is a real functional determined by an "upper" function h_U and a "lower" function h_L (Fig.13). The functions h_U and h_L are real valued , piecewise continuous, differentiable functions. Moreover, $h(x_{ij})$ is odd in the sence that

$$h_U(x) = -h_L(-x), \tag{3.2}$$

for all real numbers $x_{ij} \stackrel{\text{def}}{=} x$. Also $h_U = h_L$ for $|x|$ sufficiently large.

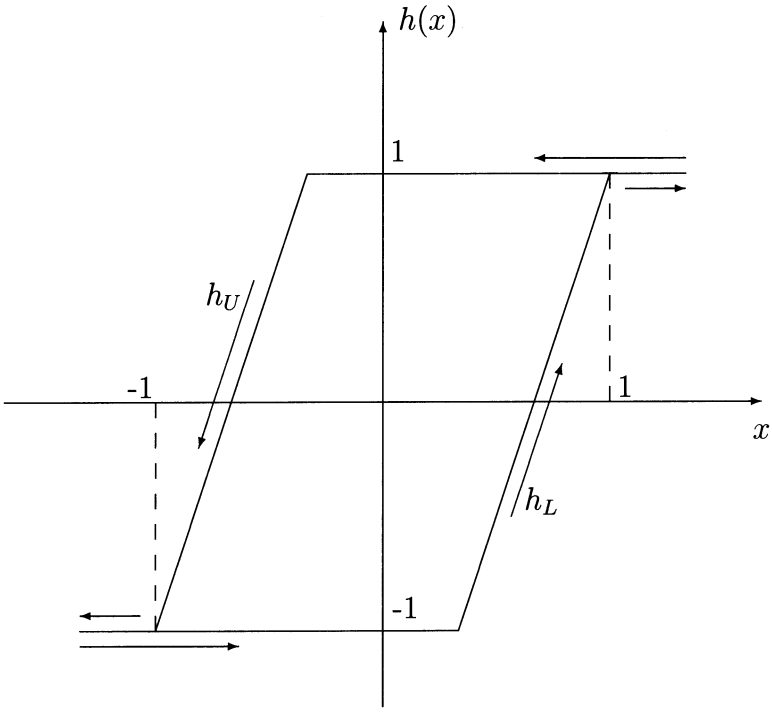

Fig.13 . Hysteresis nonlinearity.

Some constraints are also given as follows:

$$|x_{ij}(0)| \leq 1, \tag{3.3}$$

$$|u_{ij}| \leq 1, \tag{3.4}$$

$$1 \leq i \leq M\,,\; 1 \leq j \leq M,$$

As we have seen in Chapter 1 in the typical CNN, the output function is a piecewise-linear function $y_{ij} = \frac{1}{2}(|x_{ij}+1| - |x_{ij}-1|)$, giving a binary- valued output, which property has a lot of applications in pattern recognition and signal processing. Considering CNN with hysteresis as a memory-based relation we shall look for more interesting dynamic behavior of a CNN. Moreover, since the range of dynamics and the connection complexity are independent of the number of processing elements (cells), the implementation is reliable and robust. The easy programming, as well, is based on the geometric aspects of the cloning templates.

3.1.1 Stability of the equilibrium points of a CNN with hysteresis

An important step in analysing dynamical systems described above (3.1) is to recognize the topological distinct types of behavior that can occur in the systems. This leads us to focus attention on those members of the family at which topological changes, or "bifurcations", are possible.

First of all, we shall start our stability analysis with definition of the equilibrium points of (3.1). For the sake of simplicity let us rewrite (3.1) as follows:

$$\frac{dx}{dt} = -x + A * h(x) + B * u \equiv F(x), \tag{3.5}$$

where $x \stackrel{\text{def}}{=} x_{ij}$, $u \stackrel{\text{def}}{=} u_{ij}$, $y \stackrel{\text{def}}{=} y_{ij}$ and for any cloning template A and B, we define convolution operators $*$ according to definition 1.3 (Chapter 1).

Definition 3.1 *An equilibrium solution of (3.5) is a point $\bar{x} \in R^{M \times M}$ such that [58]*

$$F(\bar{x}) = -\bar{x} + A * h(\bar{x}) + B * u = 0. \tag{3.6}$$

The associated linear system in the sufficient small neighbourhood of an equilibrium point can be given by

$$\frac{dz}{dt} = DF(\bar{x})z, \tag{3.7}$$

where $z = x - \bar{x}$ and $DF(\bar{x}) = J$ is also called Jacobian matrix of the equilibrium point and can be computed by

$$J_{ps} = \frac{\partial F_p}{\partial x_s}|_{x=\bar{x}}. \tag{3.8}$$

$$1 \leq p, s \leq n\,,\; n = M.M.$$

As we mentioned in the previous chapters the main feature of CNN is the nearest neighborhood property, which means that every cell in a CNN has the same connections as its neighbors. Therefore,

each cell's circuit equation is the same as that of the other cells in the same circuit, and we can study the global properties of a CNN by studying the local properties of a single cell. This property allows us to solve for all system equilibrium points by first determining the stable cell equilibrium points, and then using the neighborhood interactive rules to find the corresponding system equilibrium points.

Moreover, because of the hysteresis type of nonlinearity in each cell of a CNN, it is resonable to divide $M \times M$- dimensional Euclidean space into different types of regions, as it is shown in Fig. 14.

Stability region (SR) is defined for all x, such that $|x| > 1$ and $|h(x)| \geq 1$. In the hysteresis region (HR), $|h(x)| < 1$ for all $|x| \leq 1$. The definition of this region comes from hysteresis nonlinearity in the feedback system of our CNN (3.1). Partial stability region (PSR) is considered for $|x| \leq 1$, $|h(x)| > 1$ and $|x| > 1$, $|h(x)| = 1$.

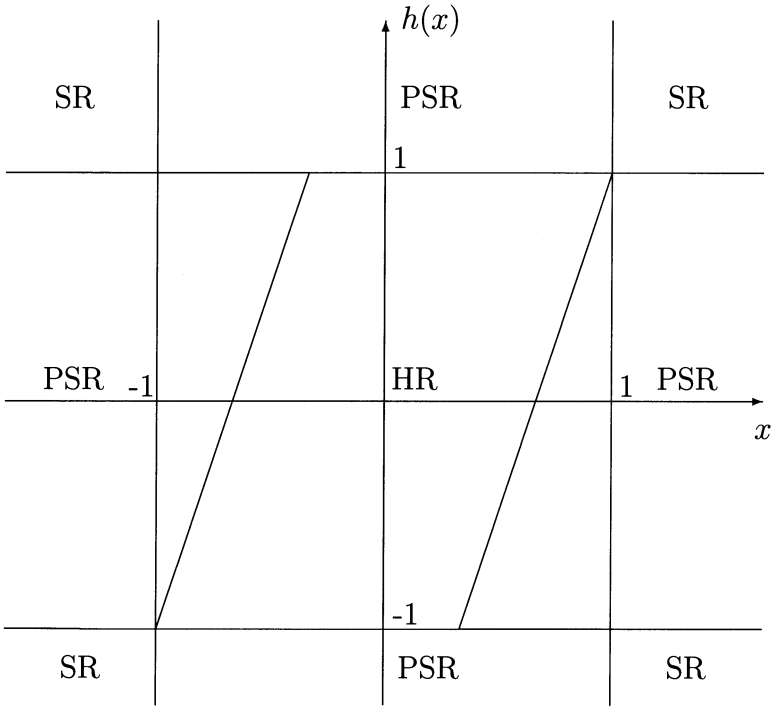

Fig.14. SR - stability region, HR - hysteresis region,

PSR - partial stability region.

The state equilibrium points are:

$$F(\bar{x}) = -\bar{x} + A * h(\bar{x}) + B * u,$$

or

$$\bar{x} = A * h(\bar{x}) + B * u. \tag{3.9}$$

Now we shall consider each region of the space given in Fig. 14.

Theorem 3.1 *In the stability region (SR) any state equilibrium point for our CNN will be asymptotically stable. In other words, after the transient has decayed to zero, any trajectory within this stability region will converge asymptotically to the corresponding unique state equilibrium point.*

Proof:

Let $\bar{x}$ is an equilibrium point in the stability region. From Fig.13 it is obvious that $|h_U| = |h_L|$ for $|x| > 1$, i.e. it is constant in this region. Consider the Lyapunov energy function:

$$E(x) = \frac{1}{2}(x - \bar{x})^T(x - \bar{x}) = \frac{1}{2}\sum_{i=1}^{n}(x_i - \bar{x}_i)^2, n = M.M. \tag{3.10}$$

Its time derivative in the stability region $|x| > 1$ will be then:

$$\begin{aligned} \dot{E}(x) &= (x - \bar{x})^T(\dot{x}) = (x - \bar{x})^T(-x + Ah(\bar{x}) + Bu) \quad (3.11) \\ &= (x - \bar{x})^T(-x + \bar{x}) = -(x - \bar{x})^T(x - \bar{x}) \\ &= -\sum_{i=1}^{n}(x_i - \bar{x})^2 \leq 0 \end{aligned}$$

The above equality holds only if $x = \bar{x}$. According to Lyapunov stability theorem [60], any x in this region will converge asymptotically to the unique equilibrium point $\bar{x}$ in the same region. Theorem is proved.

Remark 3.1 Since equation (3.5) is a first order differential equation, any trajectory is its solution:

$$x(t) = x_0 e^{-t} + \int_0^t e^{-(t-\tau)}(A * h + B * u)\, dt. \tag{3.12}$$

Since h is a constant in the stability region, then

$$x(t) = x_0 e^{-t} + (1 - e^{-t})(A * h + B * u). \tag{3.13}$$

This gives the only basin of attraction of the state equilibrium points in SR.

For the typical CNN [27], it is proved that if $|A_{ij,ij}| > 1$, then it will not oscillate or become chaotic. In our case we will not put any condition on A.

Theorem 3.2 *In the hysteresis region (HR), for any $|x| \leq 1$, such that $|h(v_x)| \leq 1$, the state equilibrium points will be unstable. In other words, after the transient has decayed to zero, if $h_U(x) = -h_L(-x)$, any trajectory will not be convergent to the state equilibrium point.*

Proof: According to (3.7) the Jacobian matrix of the equilibrium point $\bar{x}$ will be the following:

$$J = A * h^{'}(\bar{x}) - I_d.$$

Let us denote the Jacobian for the "upper" hysteresis function by J_U, respectively the Jacobian for the"lower" hysteresis function by J_L, I_d is the identity matrix. Then we have:

$$J_U = A - I_d.$$

If $|A| > 1$ therefore:

$$\sum_{i=1}^{n} \lambda_i = trace(A - I_d) = \sum_{i=1}^{n} (A(i,i;i,i) - 1) > 0.$$

This means that at least one eigenvalue of J_U has positive real part, therefore the equilibrium point $\bar{x}$ is unstable.

For J_L we get the following:

$$J_L = -A + I_d.$$

Then we obtain, for $|A| < 1$:

$$\sum_{i=1}^{n} \lambda_i = trace(-A + I_d) = \sum_{i=1}^{n} (-A(i,i;i,i) + 1) > 0.$$

Therefore we have again at least one eigenvalue of J_L with positive real part and the equilibrium point is unstable. So, in both cases, for any value of A we shall have unstable equilibrium points. Theorem is proved.

Theorem 3.3 *In the partial stability region we have two possible cases:*

i). $|x| > 1$, *then the state equilibrium points are stable;*

ii) $|x| \leq 1$, *then the state equilibrium points are unstable.*

Proof of the first part follows from Theorem 3.1, and for the second part follows from Theorem 3.2.

Remark 3.2 From the above theorems one can conclude that a CNN with hysteresis can only converge to a state equilibrium point in the regions in which $|x| > 1$ (stability region and part of the partial stability region). If the network has reached a stable state its outputs can only be + 1 or - 1. In other words we have binary outputs, which property has a lot of applications in pattern recognition and signal processing.

According to the nearest neighborhood property of CNN we shall define stable system equilibrium points, which gives the global character of our stability analysis.

Definition 3.2 *Stable system equilibrium point of CNN with hysteresis is a state vector with components,* $\bar{x}$, $|x| > 1$, *which are stable state equilibrium points defined above.*

3.1.2 Periodic solutions in the hysteresis region

Let us consider now the state equation (3.5) and let $|x| \leq 1$, $|h| \leq 1$, i.e. hysteresis region. Equation (3.5) is equivalent to the following integral equation in the set of continuous functions:

$$x(t) = x(0)e^{-t} + \int_0^t e^{-(t-\tau)}(A * h(x) + B * u)\, dt. \tag{3.14}$$

It can be considered as the following operator equation:

$$x(t) = LW(h, u, t), \tag{3.15}$$

$W(h, u, t)$ is nonlinear function on h and t, and it is easy to prove that W is Lipshitzian or differentiable on h. Moreover, we shall assume that it is periodic on t with period T, and $W(0, 0, t) = 0$, $\frac{\partial W(0,0,t)}{\partial h} = 0$. Operator L is linear and bounded, since $|x(0)| \leq 1$, i.e. there exist a constant $\rho > 0$, such that:

$$||Lg(t)|| \leq \rho ||g(t)||. \tag{3.16}$$

According to the Lyapunov's majorizing theory [55] and (3.15) the following majorizing equation can be composed for the operator equation (3.14),

$$\alpha(h) = \rho\Phi(\alpha, u), \tag{3.17}$$

where $\alpha \geq |x|$, $\Phi(\alpha, u)$ is the Lyapunov majorant for the function $W(h, u, t)$. Since h is the hysteresis functional, Φ can be presented in the form:

$$\Phi(\alpha, u) = A\alpha + Bu,$$

$$\alpha \geq |x|\,,\ |h(x)| \leq 1.$$

Therefore, according to the properties of Lyapunov's majorizing equations [55] the following theorem has been proved:

Theorem 3.4 *Suppose that Lyapunov's majorizing equation (3.16) in the hysteresis region $|x| \leq 1$, $|h| \leq 1$ has positive solution $\alpha = \alpha(h, u)$. Then operator equation (3.14) has in the same region periodic solution $x(t)$ with period T, which is unique in the set of periodic functions for the classes $C[u]$, $C[h]$. This solution can be found by the following convergent simple iterations:*

$$\begin{aligned} x_k &= LW(h(x_{k-1}), u, t), \\ x_0 &\equiv x(0). \end{aligned} \tag{3.18}$$

Remark 3.3 Since we are looking for periodic solutions in the hysteresis region, it is convinient to find them in the form of Fourier series. This will be done in the following section.

3.2 Nonlinear CNN with hysteresis in the output dynamics

As we mentioned in the previous chapters neural networks' origin is in neurophysiological models. The idea to develope a model of cellular neural networks with hysteresis, has been influenced by the fact that neurobiological studies have demonstrated neurons to exibit quite complicated dynamical behavior [70].

We shall consider a CNN described by a nonlinear dynamical system of autonomous ordinary differential equations. Let us generalize the state equation. If the state variables x_{ij} are arranged in $M \times M$ rectangle we have the following equation:

State equation:

$$\frac{dx_{ij}}{dt} = -x_{ij} + \sum_{C(k,l)\in N_r(i,j)} A_{ij,kl} y_{kl} + \\ + \sum_{C(k,l)\in N_r(i,j)} B_{ij,kl} u_{kl} + \sum_{C(k,l)\in N_r(i,j)} \hat{A}(y_{ij}, y_{kl}) + I, \quad (3.19)$$

$$1 \leq i \leq M\,,\ 1 \leq j \leq M,$$

$\hat{A}$ is nonlinear template which is function of internal states and input signals and we consider it in the form:

$$\hat{A}(y_{ij}, y_{kl}) = \begin{bmatrix} f_{11} & \cdots & f_{1n} \\ \vdots & & \vdots \\ f_{m1} & \cdots & f_{mn} \end{bmatrix},$$

$m, n \in N_r(i,j)$, functions f_{kl} are defined as

$$f_{kl} = \hat{a}_{kl} y_{ij} y_{kl}^{\alpha},\ \alpha \in \mathcal{N}.$$

Output equation:

We assume that output equation has its own dynamics where the nonlinearity in the feedback is allowed to exibit hysteresis:

$$\frac{dy_{ij}}{dt} = -y_{ij} + h(x_{ij}). \quad (3.20)$$

The hysteresis $h(x_{ij})$ is a real functional defined as in the previous section (Fig.13).
Additional characteristics:

$$|x_{ij}(0)| \leq 1, \tag{3.21}$$

$$|y_{ij}(0)| \leq 1, \tag{3.22}$$

$$|u_{ij}| \leq 1 \tag{3.23}$$

The above class of CNNs will be allowed because they are relatively simple to realize as integrated circuits.
Let us derive next an estimate for the dynamic range. For hysteresis CNNs described by (3.19-3.20), the following proposition provides a foundation for our design:

Proposition 3.1 *For the CNNs described above by the dynamical equations (3.19-3.20), all state variables x_{ij} are bounded for all times $t > 0$ and the bound x_{max} can be computed by the formula:*

$$\begin{aligned} x_{max} &= 1 + |I| + max_{1\leq i\leq M, 1\leq j\leq M}[\sum_{C(k,l)\in N_r(i,j)} (|A_{ij,kl}| + \\ &+ |B_{ij,kl}|) + \sum_{C(k,l)\in N_r(i,j)} max_t|\hat{A}|]. \end{aligned} \tag{3.24}$$

The poof follows in the same way as this of proposition 2.1 in Chapter 2.

3.2.1 Stability and dynamics

In our case we have output function with its own dynamics and hysteresis nonlinearity in the feedback. The question is if such CNN is convergent and what kind of restrictions we have to put to quarantee this convergence.

The main idea of our stability analysis is to divide $M \times M$-dimensional Euclidean space into three different types of regions, because of the uniform nonlinearity in each cell of a CNN as in

Fig.14. For simplicity of the notations let us rewrite the state equation (3.19) and the output equation (3.20) in the following form:

$$\frac{dx}{dt} = -x + A * y + B * u + \hat{A}(y) + I, \tag{3.25}$$

$$\frac{dy}{dt} = -y + h(x). \tag{3.26}$$

where $x \stackrel{def}{=} x_{ij}$, $y \stackrel{def}{=} y_{ij}$, $u \stackrel{def}{=} u_{ij}$. For any cloning template A and B, we define convolution operators $A * y$ and $B * u$ according to the Definition 1.3 in Chapter 1.

Output equation (3.20) is a first order differential equation and its solution is [60]:

$$y(t) = y(0)e^{-t} + \int_0^t e^{-(t-\tau)} h(x)\, d\tau. \tag{3.27}$$

Let us consider stability region (SR). Since in SR, $h(x) = 1$, we have

$$y(t) = y(0)e^{-t} + (1 - e^{-t})h. \tag{3.28}$$

or

$$lim_{t\to\infty} y(t) = const.$$

Therefore the following theorem is true:

Theorem 3.5 *For the hystereis CNN, described by the dynamical system (3.19-3.20), we always obtain a constant output in the stability region (SR).In other words, we have:*

$$lim_{t\to\infty} y = const. \tag{3.29}$$

This simple dynamics allows no oscillation or chaotic behavior within stability region.

Let us now consider the hysteresis region (HR),$|x| \leq 1$, $|h| < 1$. For the stability analysis of hysteresis CNN in this region we shall apply the method of Lyapunov's finite majorizing equations [55].

We can rewrite system (3.19-3.20) in the following way:

$$\frac{dz}{dt} = Qz + Z(z, h, u, t), \tag{3.30}$$

where $z = col(x, y)$, $Q = \begin{bmatrix} -1 & A \\ 0 & -1 \end{bmatrix}$, $Z(z, h, u, t) = col(X, Y)$, $X(h, u, t) = [Bu + \hat{A}(y) + I]$, $Y(h) = h(x)$. Function Z is a nonlinear function on z, h and t and it is Lipshitzian or differentiable on z. We assume that it is periodic with period T, because of the hysteresis type of nonlinearity.

Then the auxiliary system for (3.30) is:

$$\frac{dz}{dt} = Qz + \varphi(h, u, t), \tag{3.31}$$

where $\varphi(h, u, t)$ is an arbitrary continuous function in t and u.

A solution of the system (3.31) is:

$$z = [e^{-QT} - E]^{-1} \int_t^{t+T} e^{Q(t-s)} \varphi(h, u, s)\, ds. \tag{3.32}$$

Therefore according to [42] and (3.32) we may construct the following operator system, which is equivalent to the system (3.31) in the set of continuous periodic functions:

$$z(h, u, t) = L\varphi(h, u, t)\,,\ t \in [0, T]. \tag{3.33}$$

An operator L is linear and bounded and hence there exists a constant $\rho > 0$, such that the following inequality is satisfied:

$$\|L\varphi(h, u, t)\| \leq \rho \|\varphi(h, u, t)\|\,,\ t \in [0, T]. \tag{3.34}$$

If we go back to the system (3.30) we obtain the following operator system:

$$z(h, u, t) = LZ(z, h, u, t). \tag{3.35}$$

Now, we can construct the corresponding system of Lyapunov's majorizing equations [55] for (3.35) in the certain domain $|z| \leq 1$:

$$\alpha(h, u) = \rho\Phi(\alpha, h, u), \tag{3.36}$$

where $\Phi(\alpha, h, u)$ is Lyapunov majorant for the function $Z(z, h, u, t)$. It can be computed in the form:

$$\Phi(\alpha, h, u) = \begin{bmatrix} Bu + \hat{A}(\alpha_2) + I \\ h(\alpha_1) \end{bmatrix},$$

$$\alpha_1 \geq |x|\,,\ \alpha_2 \geq |y|.$$

Therefore according to the properties of Lyapunov's majorizing equations [55] the following theorem has been proved:

Theorem 3.6 *Suppose that system (3.36) in the hysteresis region $|z| \leq 1$ has positive solutions $\alpha = \alpha(h, u)$. Then system (3.30) has for $|h| < 1$ a periodic solution $z = z(h, u, t)$, which is unique in the set of functions of the classes $C[h]$, $C[u]$. These solutions can be found by the following convergent simple iterations:*

$$\begin{aligned} z_k &= LZ(z_{k-1}, h, u, t)\,,\ k = 1, 2, \ldots, \\ z_0 &\equiv z(0). \end{aligned} \tag{3.37}$$

Remark 3.4 Let us consider the iterations (3.37) and let us fix $t = \tau$, $0 \leq \tau \leq t$, $h = h_*$, $h_* \in [-1, 1]$, hence

$$\begin{aligned} z_k &= L_h Z(z_{k-1}, h_*, u)\,,\ k = 1, 2, \ldots, \\ z_0 &\equiv z(0). \end{aligned} \tag{3.38}$$

The above system gives the dynamic rules of our hysteresis CNN (3.19-3.20) in the hysteresis region and it can be used as a dynamic transform of an initial state at any time.

As mentioned before because of the nearest neighbourhood property we can understand the global properties of CNNs by studying first the local dynamics of a single cell.

Let us define stable cell equilibrium points. For the simplicity we shall assume that $Bu + I = 0$. Then system (3.19-3.20) can be written in the following form:

$$\begin{aligned} \frac{dx}{dt} &= -x + Ay + \hat{A}(y) \equiv F_1(x, y), \\ \frac{dy}{dt} &= -y + h(x) \equiv F_2(x, y). \end{aligned} \tag{3.39}$$

Definition 3.3 *Equilibrium solutions for the system (3.39) are $\bar{x}, \bar{y} \in R^{M \times M}$ such that [58]*

$$F_1 = -\bar{x} + A\bar{y} + \hat{A}(\bar{y}) = 0,$$

$$F_2 = -\bar{y} + h(\bar{x}) = 0.$$

The associated linear system in a sufficient small neighborhood of the equilibrium points $\bar{x}, \bar{y}$ can be given by

$$\frac{dw}{dt} = DF(\bar{x}, \bar{y})w\,,\ F = (F_1, F_2), \tag{3.40}$$

where $w = col(w_1, w_2)$, $w_1 = x - \bar{x}$, $w_2 = y - \bar{y}$ and $DF(\bar{x}, \bar{y}) = J$ is the Jacobian matrix of the equilibrium points $\bar{x}, \bar{y}$.

Let us consider the equilibrium points in each region now:

Theorem 3.7 *In the stability region (SR) any state equilibrium point of our CNN described by (3.19-3.20) will be asymptotically stable. In other words, any trajectory within SR will converge asymptotically to the corresponding unique state equilibrium point.*

Proof:

In the stability region (SR), $|x| > 1$, we have that $h(x) = 1$. Therefore the eigenvalues of the Jacobian matrix J in this region will be $\lambda_{1,2} = -1$. According to the theory of dynamical systems [58], it follows that the state equilibrium points $\bar{x}$, $\bar{y}$ will be asymptotically stable. Theorem is proved.

For simplicity of the notations let us denote $a = A_{ij,ij}$ and $\hat{a} = \hat{A}_{ij,ij}$.

Theorem 3.8 *In the hysteresis region (HR) for any $|x| \leq 1$ such that $|h| < 1$, the state equilibrium points are unstable, i.e. any trajectory will not be convergent to the state equilibrium points.*

Proof:

The Jacobian matrix of the state equilibrium points $\bar{x}$, $\bar{y}$ will be:

$$J = \begin{bmatrix} -1 & A + \frac{\partial \hat{A}}{\partial y} \\ \frac{dh}{dx} & -1 \end{bmatrix}. \tag{3.41}$$

Let us denote the Jacobian matrix for an "upper" hysteresis function by J_U, respectively the Jacobian matrix for a "lower" hysteresis function by J_L.

Then we have

$$J_U = \begin{bmatrix} -1 & a + \hat{a}(\alpha + 1) \\ \frac{dh}{dx} & -1 \end{bmatrix}.$$

The sum of the eigenvalues of J_U is

$$\sum_{k=1}^{n} \lambda_k = \sum_{k=1}^{n} [1 - \frac{dh}{dx}(a + \hat{a}(\alpha + 1))] > 0. \tag{3.42}$$

Analogous, for J_L

$$J_L = \begin{bmatrix} -1 & -a + \hat{a}(\alpha + 1) \\ -\frac{dh}{dx} & -1 \end{bmatrix},$$

and for the sum of the eigenvalues of J_L we get

$$\sum_{k=1}^{n} \lambda_k = \sum_{k=1}^{n} [1 - \frac{dh}{dx}(a - \hat{a}(\alpha + 1))] > 0. \tag{3.43}$$

It follows from (3.42) and (3.43) that there is at least one eigenvalue λ_k which satisfies

$$Re(\lambda_k) > 0.$$

Therefore state equilibrium points in HR are unstable.

Theorem 3.9 *In partial stability region we have two cases:*
i). if $|x| > 1$ the state equilibrium points are stable;
ii). if $|x| \leq 1$ the state equilibrium points are unstable.

Proof of this theorem follows directly from theorem 3.7 and theorem 3.8.

Now according to the nearest neighbourhood property and using the neighborhood interactive rules in CNN we shall find the corresponding system equilibrium points.

Definition 3.4 *Stable system equilibrium points for a CNN described by (3.19-3.20) is defined to be a state vector $(\bar{x}, \bar{y})$ with all its components consisting of stable cell equilibrium states for $|x| > 1$.*

Remark 3.5 From the above definition it follows that our hysteresis CNN for $|x| > 1$ is at one of its stable system equilibrium points. Since any stable system equilibrium point defined in definition 3.7 is a limit point of a set of trajectories of the corresponding system of differential equations (3.39), such an attracting limit point has a basin of attraction. In other words the state space of a CNN can be partitioned into a set of basins centered at the stable system equilibrium point.

3.2.2 Example of a two-cell autonomous CNN

As an example we shall consider the following two-cell autonomous CNN:

$$\begin{aligned} \dot{x}_1 &= -x_1 + x_2(\lambda - x_1^2 - x_2^2) \\ \dot{x}_2 &= -x_2 + x_1(\lambda - x_1^2 - x_2^2). \end{aligned} \tag{3.44}$$

Obviously the system has always an equilibrium point at $x = 0$. The Jacobian matrix is the following:

$$J(0, \lambda) = \begin{bmatrix} -1 & \lambda \\ \lambda & -1 \end{bmatrix}. \tag{3.45}$$

One of the most powerful methods for studying autonomous nonlinear systems is the theory based on a theorem by Hopf [58].In the following Hopf bifurcations in the two-cell CNN (3.44) will be described. The bifurcation is related to the parameter λ of the cell self-feedback. As it changes, the origin, which is always an equilibrium point of the system, will change from being asymptotically stable to unstable.

The following Hopf-like bifurcation theorem can be applied in our case:

Theorem 3.10 *For the dynamical system (3.44) describing two-cell autonomous CNN*

i). $\lambda = \lambda_0 = 1$ is a bifurcation point of the system;

ii). for $\lambda \in (\lambda_*, \lambda_0)$ some $\lambda_* < \lambda_0$ the origin is a stable focus;

iii). for $\lambda \in (\lambda_0, \lambda^*)$ some $\lambda^* > \lambda_0$ the origin is an unstable focus.

Proof: From (3.45) we have the eigenvalues of the system (3.44) at the origin $\lambda_{1,2} = -1 \pm \lambda$. So for $\lambda = \lambda_0 = 1$ it is clear that the equilibrium point $x = 0$ is a center and all solutions are periodic. Since at this value of the parameter the number of periodic orbits changes from none to many, we consider $\lambda_0 = 1$ a bifurcation value.

For $\lambda < 1$ all solutions spiral clockwise to the origin with increasing time, or in other words every trajectory starting in SR converges asymptotically into the origin.

For $\lambda > 1$ the origin becomes unstable focus and a periodic orbit appears. Furthermore, all the orbits, except the origin, spiral onto this periodic orbit.

The birth, or the death, of a periodic orbit through a change in the stability of an equilibrium points is known as the Poincare-Andronov-Hopf bifurcation [58].

Theorem is proved.

3.3 Feedback and hysteresis

Hysteresis is defined as a rate independent memory effect. Such a setting occurs, for example, in the Weiss mean field theory of ferromagnetism [153], because of a positive feedback effect. In this model the bistability, and consequently the occurence of hysteresis effects, corresponds to the presence of a sufficiently large positive feedback [82]. In the Weiss model of ferromagnetism it is shown that a nonlinear monotone constitutive law combined with a proper positive feedback effect can be transformed into a nonmonotone law, and can then generate hysteresis. Here we can show that monotone or nonmonotone relationships generate hysteresis only in presence of suitable feedback effects.

Let us consider a circuit composed of an electric generator and two capacitors, characterized by the laws:

$$E_1 = f(D_1) \ , \ E_2 = \frac{D_2}{\varepsilon},$$

where f is a nonmonotone function $R \to R$, ε is a positive constant, which represents electric permeability. If there elements are combined in series, then at equilibrium the charges of the two capacitors are equal $D_1 = D_2$. Then, denoting by V the generated electromotive force and by C_1 and C_2 two positive constants, we get [153]:

$$W = C_1 E_1 + C_2 E_2 = C_1 E_1 + \frac{C_2}{\varepsilon} D_1. \tag{3.46}$$

This condition will be named a load line (the potential W is the electric load). By eleminating E_1, we get

$$W = C_1 f(D_1) + \frac{C_2}{\varepsilon} D_1 = g(D_1), \tag{3.47}$$

here g may be either monotone or nonmonotone, depending on C_1 and C_2. In this case hysteresis occurs in the D_1 versus W dependence.

Finally, let us show that the presence of a load line is mathematically equivalent to occurence of a feedback effect. Usually this can be checked by means of a simple change of variable; however,

these viewpoints can have different interpretations in applications. Assume that two variables w and z are related by a law:

$$w = f(z)$$

and that they are subject to a constraint (load line) depending on a third variable u:

$$z = g(u, w).$$

Then these two relations are equivalent to a feedback law relating u and w:

$$w = (f \circ g)(u, w). \tag{3.48}$$

Now we shall make a comparison between our general model of CNN and the feedback systems with hysteresis given above.

Let us consider our CNN model as the following system of equations:

$$\dot{x}_k(t) = -D_k x_k(t) + \sum_{all\ l} A_{k,l} y_l(t) + I_k, \tag{3.49}$$

$$z_k(t) = C_k(t) x_k(t) + \sum_{all\ l} A_{k,l} y_l(t) + I_k, \tag{3.50}$$

$$y_k(t) = sgm_k(x_k(t)). \tag{3.51}$$

It is obvious that we have the feedback system. In other words we have the following relations, defined by the (3.49)-(3.51):

$$y = f(x),$$

and from the other hand after solving (3.49) we get:

$$\left| \begin{array}{l} x = g_1(y, x) \\ z = g_2(y, x). \end{array} \right.$$

If we denote vector $(g_1, g_2) = g$, then we get $y = (f \circ g)(y, x)$ which is a feedback law considered above.

Theorem 3.11 *Let $f(x)$ be a sigmoid, monotone increasing function. Assume that C_k is very large positive scalar, D_k - very large negative scalar and that $A_{k,l} > 1$. Then the CNN defined by (3.49)-(3.51) generates hysteresis.*

Proof:

Let us consider equation (3.49) and rewrite it in the form:

$$\dot{x}_k(t) = -D_k x_k(t) + F_1(y_k). \tag{3.52}$$

It is first order differential equation and therefore it is equivalent to the following integral equation:

$$x_k(t) = e^{D_k t} x_k(0) + \int_0^t e^{-D_k(t-s)} F_1(y_k(s))\, ds. \tag{3.53}$$

Substituting (3.53) in (3.50) we get:

$$z_k(t) = C_k e^{D_k t} x_k(0) + \int_0^t C_k e^{-D_k(t-s)} F_1(y_k(s))\, ds + F_1(y_k(t)). \tag{3.54}$$

Equations (3.53) and (3.54) define a feedback system of the type $y = (f.g)(y, x)$ given above. Under the conditions of the theorem, i.e. $A_{k,l} > 1$ and sufficiently large negative scalar D_k it follows from (3.53) and (3.54) that we have in this case very large positive feedback. According to [127] such kind of feedback leads to arising of hystersis in the circuit. Thus, the theorem is proved.

As indicated earlier, hysteresis arises in systems having several equilibrium points. For this reason we shall now define the equilibrium points of the CNN model (3.49) - (3.51).

Let us for simplicity consider system (3.49) - (3.51) written in the following form:

$$\dot{x} = -Dx + Ay + I = F_1(x, y), \tag{3.55}$$

$$z = Cx + Ay + I = F_2(x, y), \tag{3.56}$$

where the state vectors x, z are produced by lining up every row of the states in sequence, the dimension of the vector is $n = M.M$, A is a $(n \times n)$ matrix.

We shall consider the following output function:

$$y = f(x) = \frac{x^3}{3} - x + c. \tag{3.57}$$

By definition the equilibrium points of (3.55) - (3.56) are those for which $F_1(x,y)=0$ and $F_2(x,y)=0$ or in other words we have:

$$\begin{aligned} -D\bar{x}+Af(\bar{x})+I&=0, \\ C\bar{x}+Af(\bar{x})+I&=0. \end{aligned} \tag{3.58}$$

The associated linear system in the sufficient small neighbourhood of the equilibrium points $\bar{x}$ can be given by:

$$\frac{du}{dt}=Ju, \tag{3.59}$$

where $u=x-\bar{x}$, $F=col(F_1,F_2)$, J is the Jacobian matrix and can be computed by:

$$J_{ps}=\frac{\partial F_{ip}}{\partial x_s}|_{x=\bar{x}},\ i=1,2,\ 1\leq p,s\leq n. \tag{3.60}$$

Let us denote by $a_q=A(l,l)$, $1\leq q\leq n$.

Theorem 3.12 *If $a_q>1$, $1\leq q\leq n$, any equilibrium point $\bar{x}$ of our CNN model (3.49) - (3.51) is unstable. After the transient has decayed to zero any trajectory of the system (3.49) - (3.51) will not converge to one stable equilibrium point. In other words we have hysteresis or bistability of the equilibrium points.*

Proof:

Let us for the symplicity of the proof suppose that $D=C=1$. Then the Jacobian matrix (3.60) will have the following form:

$$J=-I_d+A(x^2-1). \tag{3.61}$$

If we consider the characteristic of the output function $f(x)$ (see Fig. 8), we have only stable equilibrium points are $\bar{x}=\pm\sqrt{3}$. Then the sum of eigenvalues of J for $\bar{x}=\pm\sqrt{3}$ is:

$$\sum_{q=1}^{n}\lambda_q=trace(2A-I_d)=\sum_{q=1}^{n}(2a_q-1).$$

Obviously the sum will be positive for $a_q>1$. Thus, according to the stability theory of the dynamical systems [58] it follows that the state equilibrium points $\bar{x}$ are unstable. Moreover, the

condition $a_q > 1$ posseses a very large positive feedback in our CNN, which can exibit hysteresis according to the theory of ferromagnetism [153]. Since the trajectory of the system (3.49)-(3.51) is actually the solution of the differential equation (3.49) which is a first order differential equaition, it means that after the transient has deacyed to zero the trajectory will not converge to the stable equilibrium point if $a_q > 1$. Therefore, the theorem is proved.

3.3.1 Hyperbolic CNN with hysteresis

Many dynamical systems exibit hysteresis as one of their features. In classical continuum mechanics, hysteresis behavior is inherent in many constitutive laws. If the hysteresis behavior is described using a hysteresis operator, then the mathematical model for the dynamical system consists of a system of differential equations coupled with one or several hysteresis operators, which is complemented by initial and boundary conditions.

Hysteresis constitutive laws in continuum mechanics formulated in terms of hysteresis operators lead in a natural way to partial differential equations coupled with hysteresis operators, where the former represent the balance laws for mass, momentum and internal energy. From a mathematical viewpoint particularly interesting are those situations where the hysteresis operator appears in the principal part of the partial differential equation, since then the proofs of even basic existence and uniqueness results are linked in a non-obvious manner to certain properties of the hysteresis diagrams and of the memory structure.

The main aim of this section is to study a class of first order semilinear hyperbolic equations, in which a memory operator occurs in the sourse term [154]:

$$\frac{\partial u}{\partial t} + \frac{\partial u}{\partial x} + \mathcal{F}(u) = 0, \text{ in } Q =]a, b[\times]0, T[. \tag{3.62}$$

We shall search for traveling wave solutions of such model which leads to study of ordinary differential equations with hysteresis. In this connection we shall construct CNN model of (3.62) and we shall study its dynamical behavior using describing function method

(Appendix C). Finally we shall make comparison between obtained results for our CNN model and the classical mathematical results for (3.62).

For solving the hyperbolic equation with memory (3.62) spatial discretization has to be applied. The partial differential equation is transformed into a system of ordinary differential equations which is identified as the state equations of a CNN with appropriate templates. The discretization in space is made in the following way [113]: we map $u(x,t)$ into a CNN layer such that the derivative $\frac{\partial u}{\partial x}$ can be written as $\frac{u_{j+1}-u_j}{h}$, where $h = \Delta x$ is a discretization step. Then the hyperbolic equation (3.62) can be approximated by the set of ordinary differential equations:

$$\frac{du_j}{dt} = -\frac{(u_{j+1} - u_j)}{h} - \mathcal{F}(u_j), 1 \leq j \leq M. \tag{3.63}$$

Let us consider an autonomous CNN with $M \times M$ cells lined up in a row and let compare (3.63) with the state equation of the autonomous CNN. Then we obtain the following templates:

$$\begin{aligned} A &= [0,\ 1,\ -\frac{1}{2h}][u_j] \\ \tilde{A} &= [0,\ -\mathcal{F}(u_j),\ 0], 1 \leq j \leq M = N.N. \end{aligned} \tag{3.64}$$

We shall take the hysteresis operator $\mathcal{F}(u_j)$ to be a real functional defined by an "upper" function $\mathcal{F}_U$ and a "lower" function $\mathcal{F}_L$ (Fig.15). Functions $\mathcal{F}_U$ and $\mathcal{F}_L$ are real valued, piecewise continuous, differentiable functions. Moreover, $h(v_{xij})$ is odd in the sense that

$$\mathcal{F}_U(u_j) = -\mathcal{F}_L(-u_j).$$

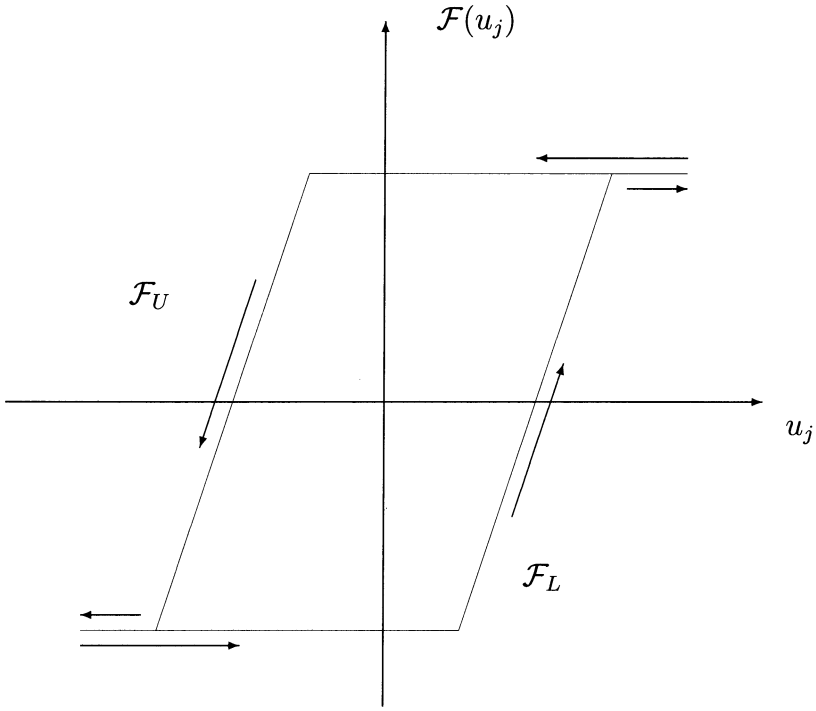

Fig.15. Hysteresis nonlinearity.

For the output function f of our model we shall take the standard sigmoid function. We will take periodic boundary conditions:

$$u_0 = u_n, \tag{3.65}$$
$$u_{n+1} = u_1,$$

which make the array circular [20].

We have the following result [141] for the dynamical behaviour of the CNN model (3.63):

Proposition 3.2 *CNN model (3.63), with circular array of $n = M.M$ cells and periodic boundary conditions*

$$u_0(t) \equiv u_n(t),$$
$$u_{n+1} \equiv u_1(t),$$

has periodic solution with period $T_0 = 2\pi/\omega_0$ and amplitude U_{m_0} for all $\Omega_0 = \frac{2\pi k}{M}$, $0 \leq k \leq n-1$.

The following theorem for the stability of the predicted periodic solutions has been proved in [141]:

Theorem 3.13 *Circular CNN model (3.63) of the hyperbolic equation with hysteresis has periodic solutions with period* $T_0 = 2\pi/\omega_0$ *and amplitude* U_{m_0} *for all* $\Omega_0 = \frac{2\pi k}{M}$, $0 \leq k \leq M-1$ *for all* M. *Moreover, these periodic solutions are stable.*

Remark 3.6 According to the Poincare-Bendixon theorem [58] applied to our case, only a set of initial conditions of measure zero will reach a periodic solution, all other trajectories will converge to an equilibrium point.

Remark 3.7 (Regulazing effect of hysteresis). Theorem 3.13 shows that the presence of hysteresis has a regulazing effect in nonlinear wave propagation, in essential contrast to the possible occurance of discontinuous solutions in the form of shock waves that can develop for the nonlinear wave equation, that is, in the case of nonlinear superposition operator.

As we said in the begining we shall search for traveling wave solution of (3.62). We look for a solution in the form: $u(x,t) = \hat{u}(x+ct)$, where c is the speed of the wave. It is known [156] that for a travelling wave front represented by $u(x,t)$ is said to be a wave front if

$$u(x,t) \to k_1 \text{ as } t \to -\infty, u(x,t) \to k_2 \text{ as } t \to \infty,$$

for some constants k_1 and k_2.

According to the obtained results, there exist stable periodic solutions of our CNN model (3.63), such that $lim_{t\to\pm\infty} u_j(t) = const.$, $1 \leq j \leq M$. Therefore we have proved existence of traveling wave solutions with period $T_0 = 2\pi/\omega_0$ and the wave front U_{m_0}.

Analogous results are proved in [154]. In other words it is proved that for $\mathcal{F}$ -piecewise continuous and monotone hysteresis operator, there exists a solution of (3.62) in the form of a traveling wave: $u(x,t) = \hat{u}(x.\nu + ct)$, $|\nu| = 1$, $c > 0$ and such that $lim_{\xi\to\infty}\hat{u}(\xi) = \hat{u}^*$, $\hat{u}^*$ is a given real number, $\xi := x.\nu + ct$.

3.4 Control of chaotic CNNs

Over the past few decades, one of the most exciting and interesting ideas developed in nonlinear dynamics is that concerning the complex and chaotic behavior of the systems. Recently, novel applications where the chaos has to be, in some sense, controlled have been studied. There exist two paradigms, the first one is negative since chaos must be avoided and the second one is positive when chaos is a desired dynamics.

In this section chaotic behavior of CNNs will be investigated. Chaos is presented in a three-cell autonomous system. We propose a new approach based on discrete-continuous control for the stabilization of the chaotic attractor found in such CNN. Using a basic idea of an elementary chaos model it leads to practical ideas for the analysis and control.

3.4.1 Bifurcation and chaos in CNNs

CNNs are complex nonlinear dynamical systems, and therefore one can expect interesting phenomena like bifurcations and chaos to occur in such nets. In [161] it was shown that as the cell self-feedback coefficients are changed to a critical value, a CNN with opposite-sign template may change from stable to unstable. Namely speaking, this phenomenon arises as the loss of stability and the birth of a limit cycles. Moreover, the appearance of a strange attractor in a periodically driven two-cell CNN have been reported in [161]. In a three-cell autonomous CNN this attractor has properties similar to the double scroll attractor [162].

Let us consider a three-cell autonomous CNN with the dynamics of the system described by the set of ODEs:

$$\begin{aligned} x_1' + x_1 &= p_1 f(x_1) - s f(x_2) - s f(x_3) \\ x_2' + x_2 &= -s f(x_1) + p_2 f(x_2) - r f(x_3) \\ x_3' + x_3 &= -s f(x_1) + r f(x_2) + p_3 f(x_3), \end{aligned} \tag{3.66}$$

where $p_1 > 1$, $p_2 > 1$, $p_3 > 1$, $r, s > 0$, the input u and the bias current I are set to zero.

We shall consider the output function $y = f(x)$ to be in the form:

$$y_i = f(x_i) = \frac{1}{2}(|x_i + 1| - |x_i - 1|), i = 1, 2, 3. \tag{3.67}$$

The state system (3.66) can be rewritten in the following form:

$$x^{'}(t) + Ex(t) = CF(x), \tag{3.68}$$

where $x(t) = col(x_1, x_2, x_3)$, $F(x) = col(f(x_1), f(x_2), f(x_3))$,

$$C = \begin{bmatrix} p_1 & -s & -s \\ -s & p_2 & -r \\ -s & r & p_3 \end{bmatrix}, E \text{ - identity matrix.}$$

An equilibrium solution of (3.68) is a point $\bar{x} \in \mathbf{R}^3$ such that

$$\mathcal{F}(\bar{x}) = CF(\bar{x}) - E\bar{x} = 0. \tag{3.69}$$

The associated linear system in the sufficiently small neighborhood of an equilibrium point can be given by

$$\frac{dz}{dt} = D\mathcal{F}(\bar{x})z, \tag{3.70}$$

where $z = x - \bar{x}$, and $D\mathcal{F}(\bar{x}) = J$ is a Jacobian matrix of the equilibrium point and can be computed by:

$$J_{kl} = \frac{\partial \mathcal{F}_k}{\partial x_l}|_{x=\bar{x}}. \tag{3.71}$$

It is well-known that if all of the eigenvalues of J have negative real parts, then the equilibrium point $x = \bar{x}$ is asymptotically stable. On the contrary, if one of the eigenvalues of J has a positive real part, then the equilibrium point $\bar{x}$ is unstable.

We have the following theorem concerning the stability of the equilibrium points of our CNN.

Theorem 3.14 *For a three-cell autonomous CNN described by the dynamical system (3.66), (3.67) the following statements hold:*

i). For $|x_i| > 1$, and $p_i > 1$, $s, r > 0$, $i = 1, 2, 3$ all equilibrium points of the CNN are stable. Moreover, any trajectory within this region will converge asymptotically to the corresponding stable equilibrium point.

ii). For $|x_i| < 1$, $p_i > 1$, $i = 1, 2, 3$ any equilibrium point of the CNN is unstable.

Proof: According to the characteristic of the output function $y = f(x)$ we have the following three cases:

1). $f(x_i) = -1$,

2). $f(x_i) = x_i$,

3). $f(x_i) = 1, i = 1, 2, 3,$.

Statement i) of the Theorem 3.14 concerns cases 1). and 3). The Jacobian matrix J in these two cases is:

$$J_{1,3} = \begin{bmatrix} -1 & 0 & 0 \\ 0 & -1 & 0 \\ 0 & 0 & -1 \end{bmatrix}. \tag{3.72}$$

Therefore all equilibrium points in $|x_i| \geq 1$ will be asymptotically stable.

Let us consider case 2). The Jacobian matrix now is:

$$J_2 = \begin{bmatrix} p_1 - 1 & -s & -s \\ -s & p_2 - 1 & -r \\ -s & r & p_3 - 1 \end{bmatrix}. \tag{3.73}$$

For an equilibrium point $\bar{x}$ in $|x_i| < 1$, the sum of the eigenvalues of J_2 is then equal to the trace of $C - E$:

$$\sum_{j=1}^{3} \lambda_j = trace(C - E) = \sum_{j=1}^{3} (p_j - 1) > 0. \tag{3.74}$$

It follows that there is at least one eigenvalue λ_j of J_2 such that $Re\, \lambda_j > 0$. Therefore any equilibrium point in $|x_i| < 1$ is unstable.

Theorem is proved.

Computer simulation of (3.66), (3.67) has been made [161] with the following parameter set: $p_1 = 1.25$, $p_2 = 1.1$, $p_3 = 1$, $s = 3.2$,

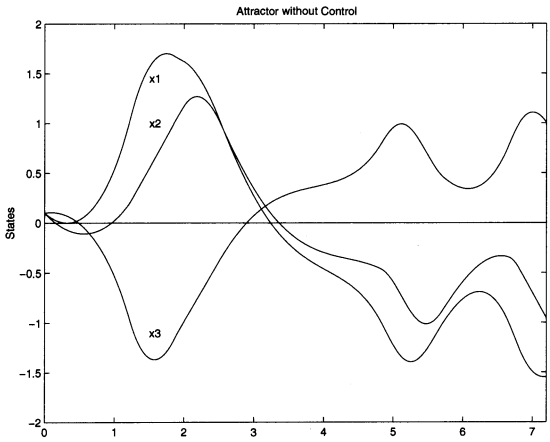

Fig. 16. CNN strange attractor.

$r = 4.4$ and initial condition $x(0) = (0.1, 0.1, 0.1)$, and a strange attractor has been observed (see Fig.16).

3.4.2 Discrete-continuous control of chaotic CNNs

In the general topic of controlling chaos one of the most studied problems is the system stabilization to a desired solution. Consider a three-cell autonomous CNN (3.66), (3.67). According to Theorem 3.14 it exibits a chaotic behavior and regular dynamics in the different regions of its state space. As we mentioned above the aim of this section is to design a discrete-continuous regulator of such CNNs with the following specifications satisfied [1]:

a). Stabilize the chaotic motions to an admissible solution, which must be connected in some way to the original behavior of the system. In the previous section we have proved that in the region $|x_i| < 1$ a three-cell autonomous CNN (3.66), (3.67) is unstable. We shall find an appropriate control such that our unstable CNN will become asymptotically stable.

b). Preserve the stability features of the equilibrium points in the region $|x_i| \geq 1$.

Therefore, the control aim is to remove chaos without modifying the essential features of the given system far from this behavior. This physically means that the control energy is small and easy transitions between two operating modes are possible, as required in CNNs' applications [28]. For these reasons we shall apply method of discrete-continuous regulator to our CNN model.

Let us write linearized system (3.66), (3.67) for the region $|x_i| < 1$ (case (ii) of the Theorem 3.14) in the following form:

$$\begin{aligned} x'(t) &= Ax(t) \\ y(t) &= Dx(t), \end{aligned} \tag{3.75}$$

where

$$A = \begin{bmatrix} p_1 - 1 & -s & -s \\ -s & p_2 - 1 & -r \\ -s & r & p_3 - 1 \end{bmatrix}, D = \begin{bmatrix} 1 & 0 & 0 \\ 0 & 1 & 0 \\ 0 & 0 & 1 \end{bmatrix}.$$

An algorithm for the construction of the control $u(t)$ based on discrete-continuous regulator method is as follows [1]:

First of all we will descretize the time of output observation $t \to kh$, $k = 1, 2, \ldots$, h is a sampling period. It is well-known that one of the most important applications of CNNs is in image processing and pattern recognition. For this reason it is good to choose the sampling period h sufficiently large. The problem now can be formulated in the following way:

$$\begin{aligned} x'(t) &= Ax(t) + Bu(t), x(0) = x_0 \\ y(kh) &= Dx(kh), \end{aligned} \tag{3.76}$$

where

$$B = \begin{bmatrix} 1 & 0 & 0 \\ 0 & 1 & 0 \\ 0 & 0 & 1 \end{bmatrix}.$$

We seek the discrete-continuous feedback regulator in the form:

$$u(t) = R\hat{x}(t), \ kh \leq t < kh + h. \tag{3.77}$$

We define an observer for the mode (3.76) as the system with the following structure:

$$\begin{aligned} \hat{x}'(t) &= A\hat{x}(t) + Bu(t) \\ \hat{x}(kh) &= \hat{x}(kh-0) + Q[y(kh) - D\hat{x}(kh-0)]. \end{aligned} \tag{3.78}$$

Since the state variable x in the system (3.78) is a continuous function, i.e. $x(kh) = x(kh-0)$, an error of the estimation of the state

$$\tilde{x}(t) = x(t) - \hat{x}(t),$$

can be defined from the following system:

$$\begin{aligned} \tilde{x}'(t) &= A\tilde{x}(t), \ kh \leq t < kh + h \\ \tilde{x}(kh) &= [E - QD]\tilde{x}(kh-0). \end{aligned} \tag{3.79}$$

System (3.76) with the control (3.78) can be written in the form:

$$x'(t) = [A + BR]x(t) - BR\tilde{x}(t). \tag{3.80}$$

Then we obtain an unified model of the system with the state vector $X_u(t) = col\{x(t), \tilde{x}(t)\}$:

$$\begin{aligned} X_u'(t) &= A_c X_u(t), \ kh \leq t < kh + h \\ X_u(kh) &= A_d X_u(kh-0), \ X_u(0) = X_0, \end{aligned} \tag{3.81}$$

where

$$A_c = \begin{bmatrix} A + BR & -BR \\ 0 & A \end{bmatrix}, A_d = \begin{bmatrix} E & 0 \\ 0 & E - QD \end{bmatrix}.$$

Then the stability of the system (3.81) with the discrete-continuous regulator (3.77) is defined by the following matrix:

$$\Phi = \begin{bmatrix} exp(A + BR)h & \Phi_{12} \\ 0 & (E - QD)exp(Ah) \end{bmatrix}, \tag{3.82}$$

where

$$\Phi_{12} = \int_0^h e^{(A+B)(h-t)} B e^{At} dt.$$

Matrix Φ is a block-diagonal matrix, therefore the eigenvalues of (3.82) are equivalent to the eigenvalues of its diagonal blocks. Then in order to construct a discrete-continuous regulator we have to solve two problems:

1). To define feedback matrix R, such that matrix $A+BR$ to be stable, in other words real part of the eigenvalues of $A+BR$ should be strictly negative.

2). Find Q such that module of the eigenvalues of $(E-QD)exp(Ah)$ to be less than 1 as well.

Let us for simplicity take:

$$R = \begin{bmatrix} r_c & 0 & 0 \\ 0 & r_c & 0 \\ 0 & 0 & r_c \end{bmatrix}, Q = \begin{bmatrix} q & 0 & 0 \\ 0 & q & 0 \\ 0 & 0 & q \end{bmatrix}.$$

Then answers of the above questions are given by the following theorem:

Theorem 3.15 *For any sampling period h matrix Φ will be asymptotically stable iff:*

1). $r_c < 1 - Re(\mu_j)$, $j = 1, 2, 3$, μ_j are the eigenvalues of the matrix C from (3.68); and

2). $|1 - q| < exp((1 - \mu_j)h)$.

Proof: Matrix $exp((A+BR)h)$ will be asymptotically stable if the real parts of the eigenvalues λ_j of matrix $(A+BR)h$ are negative. They can be found as the solutions of the equation:

$$det((A+BR)h - \lambda E) = 0. \tag{3.83}$$

Let us rewrite matrix $(A+BR)h$ in the following way:

$$(A+BR)h = \begin{bmatrix} p_1 & -s & -s \\ -s & p_2 & -r \\ -s & r & p_3 \end{bmatrix} h + \begin{bmatrix} r_c - 1 & 0 & 0 \\ 0 & r_c - 1 & 0 \\ 0 & 0 & r_c - 1 \end{bmatrix} h.$$

Therefore (3.83) become:

$$det(Ch + (r_c - 1)hE - \lambda E) = 0 \iff \tag{3.84}$$

$$\iff det(C + (r_c - 1)E - \frac{\lambda}{h}E) = 0,$$

$$\iff det(C - (\frac{\lambda}{h} - (r_c - 1))E) = 0.$$

Let $\mu = \frac{\lambda}{h} - (r_c - 1) \Rightarrow det(C - \mu E) = 0$. Then $\lambda_j = (r_c - 1 + \mu_j)h$, $1 \leq j \leq 3$. We want to find such values of R that $Re(\lambda_j) < 0$. Therefore,

$$Re(\lambda_j) = h(r_c - 1 + Re(\mu_j)) < 0 \iff$$

$$r_c < 1 - Re(\mu_j),\ 1 \leq j \leq 3.$$

Matrix $(E - QD)exp(Ah)$ will be asymptotically stable if the modules of its eigenvalues are less than 1. Hence we have:

$$det((1-q)exp(Ah) - \lambda E) = 0 \iff \tag{3.85}$$

$$det(exp(Ah) - \frac{\lambda}{1-q}E) = 0,\ q \neq 1.$$

Let $\nu = \frac{\lambda}{1-q} \iff det(exp(Ah) - \nu E) = 0$.
Therefore $\nu_j = exp((\mu_j - 1)h)$. Hence we obtain:

$$|\lambda_j| = exp((\mu_j - 1)h)x|1 - q| < 1 \iff$$

$$|1 - q| < exp((1 - \mu_j)h).$$

It is obvious that such q exists. Theorem is proved.

The following computer simulations are made for the CNN attractor (3.66), (3.67) with discrete-continuous regulator:

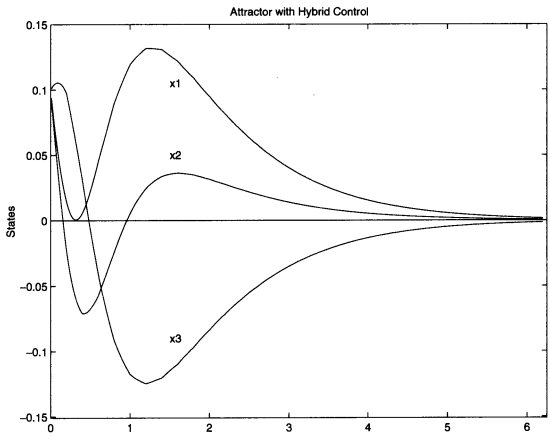

Fig. 17. CNN with discrete-continuous regulator.

4 CNN modelling in biology, physics and ecology

As it was stated in [113], some autonomous CNNs represent an excellent approximation to the nonlinear partial diffrential equations (PDEs). Although the CNN equations describing reaction-diffusion systems are with the large number of cells, they can exhibit new phenomena that can not be obtained from their limiting PDEs. This demonstrates that an autonomous CNN is in some sense more general than its associated nonlinear PDE.

In this chapter we shall present the derivation of the CNN implementations throught spatial discretization, which suggests a methodology for converting a PDE to CNN templates and vice versa. The CNN solution of a PDE has four basic properties- it is

i). continuous in time;

ii). continuous and bounded in value;

iii). continuous in interaction parameters;
iv). discrete in space.

We shall demonstrate how an autonomous CNN can serve as a unifying paradigm for active wave propagation, several well-known examples chosen from different disciplines will be modeled. Moreover, we shall show how the three basic types of PDEs: the diffusion equation, the Laplace equation, and the wave equation, can be solved via CNNs.

4.1 Modelling PDEs via CNNs

In [113] it was shown how a typical PDE, the heat equation, can be approximated, on a finite spatial grid, by a CNN with a given simple cell and cloning templates. This is possible, because PDEs and CNNs share a common property; namely, their dynamics behavior depends only on their spatial local interactions.

The well known heat equation from physics is:

$$u_{xx} + u_{yy} = \frac{1}{k} u_t, \tag{4.1}$$

where k is a constant, called the thermal conductivity. The solution, $u(x, y, t)$ of the heat equation is a continuous function of the time t, and the space variables x, y. If the function $u(x, y, t)$ is approximated by a set of functions $u_{ij}(t)$, which are defined as

$$u_{ij}(t) = u(ih_x, jh_y, t), \tag{4.2}$$

where h_x and h_y are the space intervals in the x and y coordinates, then, the partial derivatives of $u(x, y, t)$ with respect to x and y can be replaced approximately by:

$$\begin{aligned} u_{xx} + u_{yy} \approx \frac{1}{4}[u_{ij-1}(t) + u_{ij+1}(t) + u_{i-1j}(t) + u_{i+1j}(t)] \\ -u_{ij}(t), \quad for \ all \ i, j. \end{aligned} \tag{4.3}$$

Thus, the heat equation (4.1) can be approximated by a set of equations

$$\begin{aligned} \frac{1}{k}\frac{du_{ij}}{dt} = \frac{1}{4}[u_{ij-1}(t) + u_{ij+1}(t) + u_{i-1j}(t) + u_{i+1j}(t)] \\ -u_{ij}(t), \quad for \ all \ i, j. \end{aligned} \tag{4.4}$$

In [113] by adding a capacitor across the output of a simple cell, wave type equations have been also generated. Moreover, at the equilibrium, we recover the Laplace equation. These CNNs will be called reaction-diffusion CNNs because they are described mathematically by a discretized version of the following well-known system of nonlinear PDEs - reaction-diffusion equations [156]:

$$\frac{\partial u}{\partial t} = f(u) + D\nabla^2 u, \tag{4.5}$$

where $u \in \mathbf{R}^m$, $f \in \mathbf{R}^m$, D is a $m \times m$ diagonal matrix whose diagonal elements D_i are called the diffusion coefficients, and

$$\nabla^2 u_i = \frac{\partial^2 u_i}{\partial x^2} + \frac{\partial^2 u_i}{\partial y^2}, \quad i = 1, 2, \ldots, m, \tag{4.6}$$

is the Laplacian operator in $\mathbf{R}^2$.

There are several ways to approximate the Laplacian operator (4.6) in discrete space by a CNN synaptic law with an appropriate A-template [113]. For example we can have:

a). one-dimensional discretized Laplacian template:

$$A_1 : (1, -2, 1); \tag{4.7}$$

b). two-dimensional discretized Laplacian template:

$$A_2 : \begin{pmatrix} 0 & 1 & 0 \\ 1 & -4 & 1 \\ 0 & 1 & 0 \end{pmatrix}, \tag{4.8}$$

which is in fact the approximation for the heat equation (4.1).

As an another example we shall consider Burgers' equation:

$$\frac{\partial u(x,t)}{\partial t} = \frac{1}{R}\frac{\partial^2 u(x,t)}{\partial x^2} - u(x,t)\frac{\partial u(x,t)}{\partial x} + F(x,t). \tag{4.9}$$

The solution in the homogeneous case, $F(x,t) = 0$, is given by [130]

$$u(x,t) = \frac{\int_{-\infty}^{+\infty}(x-y)exp\{\frac{R}{4t}(x-y)^2 - \frac{R}{2}\int_0^y u(y',0)dy'\}dy}{t\int_{-\infty}^{+\infty} exp\{\frac{R}{4t}(x-y)^2 - \frac{R}{2}\int_0^y u(y',0)dy'\}dy}, \tag{4.10}$$

$$\int_{-\infty}^{+\infty} u(y,0)dy < \infty.$$

Replacing the spatial derivatives by difference terms with $u_i(t) \equiv u(x_i, t)$, $F_i(t) \equiv F(x_i, t)$ and $\Delta x = x_{i+1} - x_i$, (4.9) can be approximated by the set of ODEs:

$$\begin{aligned} \frac{du_i(t)}{dt} &= \frac{1}{R}\frac{u_{i+1}(t) - 2u_i(t) + u_{i-1}(t)}{(\Delta x)^2} - \\ &\quad -\frac{u_i(t)[u_{i+1}(t) - u_{i-1}(t)]}{2\Delta x} + F_i(t), \\ &\quad i = 1, \ldots, M-1. \end{aligned} \tag{4.11}$$

We set $u_0(t) = u_M(t) = 0$ and assume $u(x, t)$ to be practically zero outside the range $[x_0, x_M]$. By comparing the coefficients of (4.11) with the state equation of a nonlinear CNN we find the following templates:

$$A_{LIN} = (\frac{1}{R(\Delta x)^2}, \frac{1}{R_c} - \frac{2}{R(\Delta x)^2}, \frac{1}{R(\Delta x)^2}),$$

$$A_{NLIN} = (\frac{1}{2(\Delta x)}, 0, -\frac{1}{2(\Delta x)}).$$

It is obvious that here the feedback template $\tilde{A} = A_{LIN} + A_{NLIN}$ is split into a linear and a nonlinear part.

Solutions of Burgers' equation have been calculated by CNN approach for various values of R, Δx, and for different initial conditions $u(x, 0)$ [155]. Moreover, the approximation accuracy of the CNN solutions was evaluated for the homogeneous case by comparing them with the well-known corresponding explicit solutions of (4.9). The relative error is given by

$$e_i^{rel} = |\frac{(u_i^{CNN} - u_i^*)}{u_i^*}|, \tag{4.12}$$

where u_i^{CNN} denotes the CNN-result and u_i^*- the result obtained by (4.11). The average e_i^{rel} of all cells was calculated for different stepsizes Δx and the initial state

$$u(x, 0) = \frac{1}{\sqrt{2\pi}}(e^{-(x-3)^2/2} + e^{-(x+3)^2/2}). \tag{4.13}$$

The results [113] demonstrate that the CNN solutions are perfect representations of u_i^* for stepsizes $\Delta x < 0.02$ with an mean relative error of less than 10^{-4}.

4.1.1 One dimensional CNN and PDE

Let us consider a one-dimensional CNN, described by the space-invariant A- template $A = [r\,p\,s]$ with no B-template and no independent term ($I = 0$) [27]. The equation describing the cell C_i of such a CNN is thus given by

$$\dot{u}_i = -u_i + rf(u_{i-1}) + pf(u_i) + sf(u_{i+1}) = -u_i + [r\,p\,s] * f(u_i), \quad (4.14)$$

where the nonlinearity $f(u)$ is the piecewise linear function (1.14) and the symbol $*$ denotes a discrete spatial convolution. If $|u_i| \leq 1$, cell C_i will be called a linear cell, whereas, if $|u_i| > 1$, it will be called saturated cell. The template $[r\,p\,s]$ can be decomposed as follows

$$[r\,p\,s] = (p+s+r)[0\,1\,0] + (s+r)/2[1\ -2\,1] + \quad (4.15)$$
$$+(s-r)[-1/2\,0\,1/2].$$

Notice that the template $[1\ -2\,1]$ corresponds to the discrete version of the second spatial derivative, while $[-1/2\,0\,1/2]$ is the discrete central spatial derivative [20]. Consequently equation (4.14) can be written in the following form

$$\dot{u}_i = -u_i + (p+r+s)f(u_i) + (s+r)/2\hat{\partial}^2 * f(u_i) + (s-r)\hat{\partial} * f(u_i), \quad (4.16)$$

where $\hat{\partial} = [-1/2\,0\,1/2]$ and $\hat{\partial}^2 = [1\ -2\,1]$. Equation (4.16) indicates that equation (4.14) is the spatially discrete analog of the PDE

$$\partial_t u(z,t) = -u + af(u(z,t)) + d\partial_z^2 f(u(z,t)) + c\partial_z f(u(z,t)), \quad (4.17)$$

where z is the spatial variable, ∂_t, ∂_z are the partial derivatives with respect to t and z and a, d, c are three constants. The three last terms of the right hand side of equation (4.17) are respectively the active reaction, diffusion and convection terms. Moreover, by comparing equation (4.16) and (4.17), the following correspondence can be stated among the parameters of the two equations:

$$(s+r)/2 \to d, \ (s-r) \to c, \ p+s+r \to a. \tag{4.18}$$

The correspondence (4.18) can be used to compare the qualitative dynamics of equation (4.17) with that of equation (4.14). In particular it is shown that, whenever the spatial discrete nature of CNN has not a critical influence on dynamics, PDEs are an useful tool to explain properties proved or simply shown by means of numerical simulations for CNN. Interesting is that, when this is the case, CNNs can be used as analog simulators of physical and biological continuous systems [35].

4.1.2 Symmetric CNN and PDE

When $r = s$ the A-template is symmetric and equation (4.16) reduces to

$$\dot{u}_i = -u_i + (p+2s)f(u_i) + s\hat{\partial}^2 * f(u_i), \tag{4.19}$$

that is the discrete analogous of the following reaction-diffusion like equation

$$\partial_t u(z,t) = -u + af(u(z,t)) + d\partial_z^2 f(u(z,t)), \tag{4.20}$$

which, in turn, is a generalized analogous of the classical reaction diffusion partial differential equation

$$\partial_t u(z,t) = f_r(u(z,t)) + D\partial_z^2 u(z,t), \tag{4.21}$$

where $f_r(u)$ is a cubic or quadratic function. Equation (4.21) arises in many fields of sciences as biology, physics and engineering [156].

In this section we want to emphasize the analogy between the qualitative behaviors of equation (4.20) and equation (4.19) in order to give some insight on the spatial filtering properties of CNN. The equilibria $u(z)$ of (4.20) are the solutions of the nonlinear differential equation

$$d\partial_z^2 f(u(z)) - u(z) + af(u(z)) = 0. \tag{4.22}$$

In linear intervals where $|u| < 1$, except for a finite number of points where $|u| = 1$, (4.22) reduces to the harmonic oscillator ordinary differential equation, with angular frequency $k_c = \sqrt{(a-1)/d}$, whose solution is a sinusoidal function of z. On the other hand, in the interior of intervals where $|u| \geq 1$, which we call saturated intervals, (4.22) reduces to $u = +a$ or $u = -a$. On boundary points between saturated and linear intervals $u(z)$ can have jump discontinuities, but can not contain Dirac's delta terms. We shall consider limited solutions of (4.20), which implies that $f(u(z))$ is continuously differentiable, as it can be easily shown from (4.22). Moreover, this property of equlibria yields to the following interface condition

$$\partial_z f(u(z))|_{z \to z_0^-} = \partial_z f(u(z))|_{z \to z_0^+} = 0, \tag{4.23}$$

where z_0 is a boundary point separating a linear interval from a saturated one.

It can be easily shown that, in order to be stable, an equilibrium may possess linear intervals which do not exceed some lenght L. Consider, for instance, a linear interval $[z_1, z_2]$, then a small perturbation $\delta u(z,t)$ of an equlibrium satisfies the equation

$$\partial_t \delta u(z,t) = -\delta u(z,t) + a\delta u(z,t) + d\partial_z \delta u(z,t) \tag{4.24}$$

for $z \in [z_1, z_2]$, with boundary conditions $\delta u(z = z_1, t) = \delta u(z = z_2, t) = 0$. Equation (4.24) has eigensolutions $\delta u(z,t) = e^{\lambda_n t + jk_n z}$ with $\lambda_n = a - 1 - (n\pi/L)^2 d$, where $n \in N$, $L = z_2 - z_1$ and j is the imaginary unit. In order to guarantee stability, all λ_n must be negative or zero. This requirement yields to

$$L \leq \pi/K_c, \tag{4.25}$$

which gives the maximum length of linear intervals.

The exact characterization of equilibria just caried out can be confirmed by an approximative spectral approach (see Appendix C). Assuming the ansatz $u(z,t) = Ue^{jkz+\lambda t}$ for the linearized version of (4.20), we obtain the dispersion relation

$$\lambda_n = a - 1 - k_n^2 d \quad n \in N, \tag{4.26}$$

where the divergent sequence k_n^2 is constituted by the eigenvalues of the operator ∂_z^2 on the interval $[0, L]$. Equation (4.26) indicates that $k_c = \sqrt{(a-1)/d}$ is a sort of cut-off spatial frequency, in the sense that the eigensolutions with $k_n > k_c$ are filtered out by the system corresponding to (4.20). Actually a linear interval, in order to correspond to a stable equilibrium, has to be short enough so that the corresponding spatial frequency is not less than k_c, otherwise the dynamics will make the solution grow for the active reaction effect. At same time the interval has to be long enough so that the corresponding spatial frequency is not greater than k_c, in order to avoid damping due to the diffusion process.

We may therefore conclude that the filtering properties of a symmetric CNN are qualitatively similar to those of (4.20) whenever small spatial cut-off frequency are considered. As expected, the analogy holds when the number of cells are large enough. If this is the case, the spatial filtering property of CNN can be undersood as a competition between reaction and diffusion.

4.1.3 Antisymmetric CNN and PDE

It is well known that CNNs with anti-symmetric template $[-s\, p\, s]$ may have stable travelling solutions [20]. This fact can be easily justified on the basis of the analogy with the corresponding PDE,

$$\partial_t u(z,t) = -u + af(u(z,t)) + c\partial_z f(u(z,t)), \qquad (4.27)$$

which also admits propagating solutions. Travelling solutions corresponding to (4.27) are quite different from those which may arise in a system described by (4.21), where the asymmetry of the active term function $f_r(u)$, coupled with the diffusion effect, gives rise to a travelling wave with a smooth wave front [130]. The travelling waves in (4.27) are produced by a transport phenomenon and are not necessarily smooth.

Let us now consider (4.27) on the finite interval $[0, L]$ with circular boundary conditions in order to allow a travelling solution to move without reflections at the boundary. Then a quite general stable travelling solution of (4.27) (with $a > 1$) is $u(z,t) =$

$ag(z+ct/a)$ where $g(\xi)$ is a piecewise constant periodic function of period L, such that $|g(\xi)| = 1$, with a finite number of points of discontinuity where $g(\xi)$ jumps from $+1$ to -1 or vise versa.

A similar kind of solutions may arise in anti-symmetric CNNs [35]

$$\dot{u}_i = -u_i + pf(u_i) + 2s\hat{\partial} * f(u_i). \tag{4.28}$$

In (4.28) the rise time has a finite value related to the number of cells and the parameters of the CNN. If two ascending wave fronts are far enough so that the time interval between their arrivals through a central cell is much longer that the rise time, the CNN can support sharp travelling wave, otherwise the network smoothes out the wave front giving rise to smooth sharped waves. In other words the behaviour of a CNN and the related PDE are similar if the fundamental spatial frequency of the initial condition is low enough.

As it was done in the previous section, let us analyze (4.27) by a spatial method based on first spatial harmonic approximation. Although we cannot obtain from this method significant informations about the spatial shape of the travelling solutions, which can be quite sharp, we can use it to predict the existence of this kind of solutions. Thus we consider solutions of (4.27) in the form $u(z,t) = Ue^{jk_nz+j\omega_nt}$ with $k_n = n2\pi/L$ and $U \geq 1$. Moreover, we use the approximation $f(u(z,t)) \approx UD(U)e^{jk_nz+j\omega_nt}$, where $D(U) = (2/\pi)(UArcsin(1/U) + \sqrt{1-1/U^2})$ is the describing function corresponding to the nonlinearity $f(u)$ (see Appendix C). From (4.27) we get the complex equation

$$1/D(U) = (a + jk_nc)/(1 + j\omega_n) = H(\omega_n) \tag{4.29}$$

and since $D(U)$ is real, we must have $Im\{H(\omega_n)\} = 0$, which yields to the dispersion relation $\omega_n = k_nc/a$. This relation gives also the velocity of the travelling waves $\nu_n = \omega_n/k_n = c/a$.

In the case of anti-symmetric CNN, by using the same approach [35], one obtains the dispersion relation $\omega_n = (2s/p)sin(n\Omega_0)$ with $\Omega_0 = 2\pi/N_c$, N_c being the number of cells. Again we find for n such small that $sin(n\Omega_0) \approx n\Omega_0$ the two results are completely analogous once the correspondence rules (4.18) are applied.

4.2 CNN model of Sine-Gordon equation

Physical fields supporting wave propagation are conveniently described by partial differential equations (PDEs). The Sine-Gordon equation is of great interest among physicists not only because it is one of the very few nonlinear PDE that has an exact analytical solution, but also because it has a stable soliton solution [156]. In view of this property, we can assert that some autonomous cellular neural networks (CNNs) can have soliton solutions. Such solutions are gaining importance in optical communication systems [144].

An autonomous CNN made of third order universal calls and coupled to each other by only one layer of linear resistors provides a unified active medium for generating wave phenomena. Although the equations describing these autonomous CNNs represent an excelent approximation to the nonlinear PDEs if the number of cells is sufficiently large, they can exibit new phenomena (propagation failture) that cannot be obtained from their limiting PDEs. This demonstrates that the autonomous CNN is in some sense more general than its associated nonlinear PDEs. Moreover, due to the circuit models used in the CNN implementation, a solution can be obtained with higher speed than any other known method.

In this section we shall apply harmonic balance method [49,88,96] for studying CNN approximating system of Sine-Gordon equation. This method is one of the most effective methods used by electrical engineers to predict the presence or absence of periodic oscillations in nonlinear systems. We shall use a new approach (see Appendix C) of predicting the periodic solutions of our CNN model for Sine-Gordon equation and shall compare the obtained results with the classical ones [156].

4.2.1 CNN modelling

Let us consider the famous Sine-Gordon equation:

$$\frac{\partial^2 \varphi}{\partial t^2} + sin\ \varphi = \frac{\partial^2 \varphi}{\partial x^2}. \tag{4.30}$$

For solving such an equation, spatial discretization has to be applied. The PDE is transformed into a system of ordinary differential equations (ODEs) which is identified as the state equations of a CNN with appropriate templates. The discretization in space is made in equidistant disctere step $h = \Delta x$. We map $\varphi(x,t)$ into a CNN layer such that the state voltage of a CNN cell $x_{ij}(t)$ at a grid point (i,j), and the second spatial partial derivative can be written as:

$$\begin{aligned} \frac{\partial^2 \varphi}{\partial x^2} &\sim \frac{1}{h^2}[\varphi(x+h,t) - \varphi(x,t) - (\varphi(x,t) - \\ &- \varphi(x-h,t))] = \frac{1}{h^2}[\varphi_{i+1,j} - 2\varphi_{i,j} + \varphi_{i-1,j}]. \end{aligned} \tag{4.31}$$

We assume that CNN has no inputs, i.e. $u_{ij}(t) \equiv 0$ [113] and we shall henceforth refer to this zero-input CNN as an autonomous cellular neural network.

For analytical investigations, it is often necessary to assume an autonomous CNN of infinite size, i.e. $M \to \infty$. In this case, the boundary conditions are replaced by the perscribed behavior of the solution at infinity. We shall assume space invariance or isotropy which means that the template coefficients $a_{ij,kl}$ are independent of ij and will be denoted therefore as a_{kl}.

Let us consider the one-dimensional CNN, where the CNN cells consist of a linear capacitor in parallel with a nonlinear inductor described by $i_i = f(\varphi_i)$, and where these cells are coupled to each other by linear inductors with inductance L. In terms of the CNN citcuit topology, we can identify the following corresponding elements:

1). CNN cell dynamics:

$$\frac{dv_i}{dt} = -\frac{1}{C}[f(v_i) - I_i], \tag{4.32}$$

$$\frac{d\varphi_i}{dt} = v_i \tag{4.33}$$

2). CNN synaptic law:

$$I_i = i_{L_i} - i_{L_{i+1}} = \frac{1}{L}(\varphi_{i-1} - 2\varphi_i + \varphi_{i+1}), \tag{4.34}$$

where $\varphi_i(t) = \int_{-\infty}^{t} v_i(\tau)\, d\tau$ is the flux- linkage at node j. Observe that the synaptic law (4.34) is a discrete Laplacian (4.7) of the flux linkage φ_i. In terms of the autonomous CNN cell structure [113] we have the following template:

$$A = \begin{bmatrix} 0 & 0 & 0 \\ 1 & -2 & 1 \\ 0 & 0 & 0 \end{bmatrix}.$$

Observe that the operator $*$ defining the synaptic controlled sources is defined by

$$\begin{aligned} a_i * f(v_{i+1}, v_i) &= a_i \int_{-\infty}^{t} [v_i(\tau) - v_{i+1}(\tau)]\, d\tau \\ &= a_i(\varphi_i - \varphi_{i+1}). \end{aligned}$$

If we substitute (4.33) and (4.34) into (4.32) we obtain:

$$C\frac{d^2\varphi_i}{dt^2} + f(\varphi_i) = \frac{1}{L}\nabla^2\varphi_i, \quad j = 0, 1, 2, \ldots, k-1, k, k+1, \ldots. \tag{4.35}$$

Suppose that we choose the nonlinear inductors to be Josephson junctions described by $i_i = f(\varphi_i) = sin\varphi_i$, and suppose we choose for simplicity $L = C = 1$ and let the number of cells $M \to \infty$, then (4.35) reduces to the Sine-Gordon equation (4.30).

4.2.2 Dynamics of the CNN model

In this section we shall introduce an approximative method, based on a special Fourier transform. The idea of using Fourier expansion for finding the solution of a partial differential equation is

well known in physics. It is used to predict what spatial frequences or modes will dominate in nonlinear PDEs. In CNN literature this approach has been developed for analyzing the dynamics of CNNs with symmetric templates [53,146].

It is known that in the frequency domain, the transformation of the spatial index i into a continuous **spatial frequency** Ω defines the discrete space Fourier transform (DSFT) by:

$$x_\Omega(t) = \sum_i x_i(t) e^{-j\Omega i}, \tag{4.36}$$

$j = \sqrt{-1}$, if the array of cells in CNN has an infinite length. Whereas its transformation into a discrete spatial frequency $\Omega = 2\pi K/N$, $0 \leq K \leq N-1$, (N -number of cells), defines a discrete Fourier transform (DFT), if the array of cells is circular and made of a finite number N of cells.

We can define the dual continuous time Fourier transform (CTFT) from continuous time t to a continuous **temporal frequency** ω by

$$X_i(\omega) = \int_{-\infty}^{\infty} x_i(t) e^{-j\omega t} dt. \tag{4.37}$$

Finally, we can combine both transforms to define a continuous time, discrete space Fourier transform (CTDSFT) from discrete space i and continuous time t to continuous spatial frequency Ω and continuous temporal frequency ω by

$$X_\Omega(\omega) = \sum_i \int_{-\infty}^{\infty} x_i(t) e^{-j(\Omega i + \omega t)} dt. \tag{4.38}$$

If the array of cells is circular, this transform can still be applied at the finite set of spatial frequencies:

$$\Omega = \frac{2\pi K}{N}, \quad 0 \leq K \leq N-1. \tag{4.39}$$

It then becomes a continuous time discrete Fourier transform (CTDFT) from finite discrete space i and continuous time t to discrete spatial frequency Ω and continuous frequency ω:

$$X_\Omega(\omega) = X_K(\omega) = \sum_{i=1}^{N} \int_{-\infty}^{\infty} x_i(t) e^{-j((2\pi K i/N) + \omega t)} dt. \tag{4.40}$$

We shall use a suitable extension of the the describing function technique (see Appendix C) for analyzing our CNN model for Sine-Gordon equation. This approach is based on the fact that all cells in CNN are identical, and therefore by introducing double Fourier transform - discrete in space and continuous in time, the network can be reduced to a scalar Lur'e sheme [96].

Let us consider our CNN model equations (4.32), (4.33), (4.34) in the following form:

$$\begin{aligned} \frac{dv_i}{dt} &= (u_{i-1} - 2u_i + u_{i+1}) - sin\, u_i, \\ \frac{du_i}{dt} &= v_i, \quad i = 1, 2, \ldots, N. \end{aligned} \tag{4.41}$$

We shall introduce the following double Fourier transform $F(s, z)$ of functions $f_k(t)$:

$$F(s, z) = \sum_{k=-\infty}^{k=\infty} z^{-k} \int_{-\infty}^{\infty} f_k(t) exp(-st) dt. \tag{4.42}$$

Applying the above transform to the CNN model (4.41) we obtain:

$$\begin{aligned} sV(s, z) &= z^{-1}U(s, z) - 2U(s, z) + zU(s, z) \\ &- sinU(s, z), \\ sU(s, z) &= V(s, z). \end{aligned} \tag{4.43}$$

If we consider the nonlinearity of the form:

$$N(s, z) = -sinU(s, z),$$

then from (4.43) it is easy to express the state $U(s, z)$ as a function of this nonlinearity:

$$U(s, z) = \frac{1}{s^2 - z^{-1} + 2 - z} N(s, z). \tag{4.44}$$

In the double Fourier transfrom (4.42) we suppose that $s = j\omega_0$ and $z = exp(j\Omega_0)$, where ω_0 is a temporal frequency, Ω_0 is a spatial frequency.

According to [48], $H(s, z)$ is the transform function, which can be presented in terms of ω_0 and Ω_0, i.e. $H(s, z) = H_{\Omega_0}(\omega_0)$:

$$H_{\Omega_0}(\omega_0) = \frac{U_{\Omega_0}(\omega_0)}{V_{\Omega_0}(\omega_0)}. \tag{4.45}$$

We are looking now for possible periodic solutions of the system (4.41) of the form:

$$u_i(t) = U_{m_0} sin(\omega_0 t + i\Omega_0) \tag{4.46}$$

$$v_i(t) \approx V_{m_0} sin(\omega_0 t + i\Omega_0) \tag{4.47}$$

and

$$V_{m_0} = \frac{1}{\pi}\int_{-\pi}^{\pi} f(U_{m_0} sin\psi) sin\psi d\psi, \tag{4.48}$$

where $f(.)$ is the sigmoid output function of the CNN.

According to the describing function method we take the first harmonics of (4.46) and (4.47), i.e. $i = 0$, therefore we obtain

$$U_{\Omega_0}(\omega_0) = U_{m_0} sin\omega_0 t, \tag{4.49}$$

$$V_{\Omega_0}(\omega_0) = V_{m_0} sin\omega_0 t, \tag{4.50}$$

and we can find the amplitude V_{m_0} from (4.48). The first harmonic of this amplitude is computed to be:

$$V_{m_0} = \frac{\pi}{2} U_{m_0}. \tag{4.51}$$

The next harmonics can be obtained from the formula:

$$Y_{m_0} = 2[\sum_{k=0}^{\infty}(-1)^k \frac{X_{m_0}^{2k+1}}{(2k+1)!!}\frac{1}{(2k+2)!!}\frac{\pi}{2} +$$

$$+\sum_{k=0}^{\infty}(-1)^{2k}\frac{X_{m_0}^{2k}}{(2k-1)!!}\frac{1}{(2k+2)!!}].$$

If we substitute $s = j\omega_0$ and $z = exp(j\Omega_0)$ in (4.44), we obtain the following transfer function:

$$H_{\Omega_0}(\omega_0) = \frac{1}{-\omega_0^2 + 2 - 2cos\Omega_0}. \tag{4.52}$$

According to (4.45) and (4.52) the following constraints hold:

$$\begin{aligned} Re(H_{\Omega_0}(\omega_0)) &= \frac{U_{m_0}}{V_{m_0}} \\ Im(H_{\Omega_0}(\omega_0)) &= 0. \end{aligned} \tag{4.53}$$

Combining (4.52) and (4.53) we get:

$$\frac{1}{-\omega_0^2 + 2 - 2cos\Omega_0} = \frac{2}{\pi}. \tag{4.54}$$

Now according to the describing function method [96], if for a given value of Ω_0 from (4.39) we can find ω_0 and U_{m_0} of (4.51) and (4.54), then we can predict the existence of periodic solution of our CNN model for Sine-Gordon equation.

Proposition 4.1 *CNN model (4.41), with circular array of N cells and periodic boundary conditions*

$$u_0(t) \equiv u_N(t),$$

$$u_{N+1} \equiv u_1(t),$$

has periodic solution with period $T_0 = 2\pi/\omega_0$ *and amplitude* U_{m_0} *for all* $\Omega_0 = \frac{2\pi K}{N}$.

Remark 4.1 In the above analysis the higher-order harmonics occuring at the output of the nonlinear block are neglected, i.e. the nonlinear block is replaced by a constant gain having the same input, which minimizes the mean squared error between the ouput from the nonlinearity and that from the gain itself [96, 146]. This assumption is often refered to us as the filtering hypotesis. This is very important condition for the accuracy of the predictions.

4.2.3 Stability of the periodic solutions

Describing function method predicts what the steady state solution of CNN will be-an equilibrium point, a periodic solution or non-periodic solution. We have predicted above, that in our CNN model exists periodic steady state solution. Moreover, it is possible to use this method not only to get an indication about the existence of the limit cycles, but also about their stability. Using the graphical criterion and following [96] we can give the analytical condition for the stability of periodic solutions which is:

Proposition 4.2 *For a real valued describing function, the periodic solution is predicted to be stable if:*

$$\frac{\partial Im\{H_\Omega(\omega)\}}{\partial \omega} \cdot \frac{\partial(1/D(X_m))}{\partial X_m} < 0. \tag{4.55}$$

From (4.53) follows that $Im(H_{\Omega_0}(\omega_0) = 0$, therefore

$$\frac{\partial Im}{\partial \omega} = 0.$$

For the describing function, which can be obtained from (4.53), we have that it is positive, i.e.

$$\frac{\partial(1/D(X_m)}{\partial X_m} = \frac{\pi}{2} > 0.$$

Thus, condition (4.55) is not satisfied.

Let us now consider the equilibrium points of our CNN (4.41). According to the definition, equilibrium points of dynamical system are those for which $F(u^e) = 0$. In our case $F(u) = A * u - sin\, u$, if we consider $u = (u_1, \ldots, u_N)$, $*$ - convolution operator. Therefore, $u^e = k\pi$, $k = 0, \pm 1, \pm 2, \ldots$ are the equilibrium points of our CNN model for the Sine-Gordon equation. The associate linear system to $F(u) = 0$ in a sufficient small neighborhood of the equilibrium point u^e can be given by

$$\frac{dz}{dt} = DF(u^e)z,$$

where $z = u - u^e$, $DF(u^e) = J$ is the Jacobian matrix of the equilibrium point and can be computed by

$$J_{ps} = \frac{\partial F_p}{\partial u_s}|_{u=u^e}, \ 1 \leq p, s \leq N. \tag{4.56}$$

According to the theory of dynamical systems [58], if all of the eigenvalues of J have negative real part, then the equilibrium point $u = u^e$ is asymptotically stable. On the other hand, if one of the eigenvalues of J has a positive real part, then the equilibrium point u^e is unstable. In our case the Jacobian matrix is $J = A - cos(u)$, then the sum of the eigenvalues of J can be computed by

$$\sum_{q=1}^{N} \lambda_q = trace(A - cos(u)) = \sum_{q=1}^{N} (a_{qq} - cos(u_q)).$$

For the equilibrium points $u^e = 0$ and $u^e = 2n\pi$ we obtain that $\sum_{q=1}^{N} \lambda_q = -1$, and they are stable. For the equilibrium points $u^e = (2n+1)\pi$ we get $\sum_{q=1}^{N} \lambda_q = 1$, which are not stable.

Therefore, the following theorem is valid:

Theorem 4.1 *Circular CNN (4.41) has periodic solutions for all N which are not stable. Moreover, all trajectories will converge either to the equilibrium points or to unstable periodic solution depending on the initial conditions.*

Remark 4.2 According to the Poincare-Bendixon theorem [58] applied to our case, only a set of initial conditions of measure zero will reach a periodic solution, all other trajectories will converge to an equilibrium point.

4.2.4 Classical solution of Sine-Gordon equation

Let us consider Sin-Gordon equation (4.30) in the following form:

$$\varphi_{tt} - \varphi_{xx} + \Phi'(\varphi) = 0 \tag{4.57}$$
$$\Phi \in C^2(R^1), \quad \Phi'(\varphi) = sin\,\varphi$$

We seek for the travelling wave of the form:

$$\varphi(t,x) = \varphi(x - ct), \quad c = const. \neq 0. \tag{4.58}$$

Let us substitute now (4.58) in (4.57). So we get

$$\varphi'' + \frac{1}{c^2 - 1} sin\,\varphi = 0. \tag{4.59}$$

Multiplying (4.59) by φ' and after integrating the following is obtained:

$$\frac{1}{2}(\varphi')^2 + \frac{1}{c^2 - 1}\Phi(\varphi) = E = const. \tag{4.60}$$

The equilibrium points for the above equation are those for which $\Phi'(a) = 0$, or $sin\,a = 0$, $a = k\pi$, $k = 0, \pm 1, \pm 2, \ldots$.

Remark 4.3 The equilibrium points give the state solutions of the (4.57), i.e. $\varphi = a = k\pi$.

If we make a comparison with the equilibrium points of our CNN model u^e from Section 4.2.2, we can see that they are the same.

Now we shall study the characteristics of (4.59). We can rewrite (4.59) in the form of the system:

$$\begin{aligned} \varphi' &= x, \\ x' &= -\frac{1}{c^2-1} sin\,\varphi. \end{aligned} \tag{4.61}$$

If we multiply by x the second equation of (4.61) and then integrate it twice we get:

$$\frac{x^2}{2} + \frac{\Phi(\varphi)}{c^2-1} = const. \tag{4.62}$$

In this way we got the characteristic curve L:

$$L: \ (c^2-1)\frac{x^2}{2} + \Phi(\varphi) = E = const. \tag{4.63}$$

We obtain three cases [156]:

i). if $0 < E < 2$ then we have periodic solutions which oscillates around $\varphi = 0$ for $c^2 - 1 > 0$, and around $\varphi = \pi$ for $c^2 - 1 > 0$;

The same we obtained for our CNN model in Sections 4.2.3. In other orders, we have unstable periodic solutions with minimal period $T_0 = 2\pi/\omega_0$ which oscillate arround the equilibrium points $u^e = 0$ and $u^e = \pi$. Since here c is the velocity of the travelling wave, it is clear that in this case it should be sufficiently large.

ii). if $E < 0$ and $c^2 - 1 < 0$ and if $E > 2$ and $c^2 - 1 > 0$ spiral waves arise;

iii). if $E = 0$ and $c^2 - 1 > 0$ solitons arise.

According to the stability theory it has been proved [58] that in the case i). periodic solutions are unstable altouth in case ii). spiral waves are stable. The classical solution of the Sin-Gordon equation (4.57) can be found from (4.60) and it is:

$$\varphi(x,t) = 4tan^{-1}exp[\frac{x-ct}{\sqrt{c^2-1}}]. \tag{4.64}$$

4.3 CNN model of FitzHugh-Nagumo equation

The most widely-used mathematical model of excitation and propagation of impulse (action potential) in nerve membranes is the FitzHugh-Nagumo equation. In [11] has been shown that this equation or the original Nagumo active pulse transmission can be unified under the umbrella of a one-dimensional reaction-diffusion Cellular Neural Network (CNN) where the cells are degenerate case of Chua's oscillator. In this section we shall focus on reaction-diffusion CNNs [113] having a linear synaptic law that approximates a spatial Laplacian operator.

An autonomous CNN made of universal cells [113] and coupled to each other by only one layer of linear resistors provides a unified active medium for generating wave phenomena. In our case, since the FitzHugh-Nagumo equation is only a simplification of the classic Hodgkin-Huxley equations [69] for nerve conduction we shall prove that with appropriate choise of circuit parameters a CNN represents a more general and versatile model of nerve conduction.

Consider now FitzHugh-Nagumo equation in the form:

$$\begin{aligned} u_t &= u(u-a)(1-u) - w + u_{xx} \\ w_t &= \varepsilon(u - bw), \end{aligned} \tag{4.65}$$

where u_t is first partial derivative of $u(t,x)$ with respect to t, u_{xx} is the second derivative of u with respect to x, w_t is the first derivative of $w(t,x)$ with respect to t, $b \geq 0$, $0 < a < 1/2$, $0 < \varepsilon \ll 1$, u is a membrain potential in a nerve axon, w is an auxiliary variable. In this equation the steady state $u = w = 0$ represents the resting state of the nerve. Since ε is a small parameter, w is a slow variable compared to u, and in an initial time period we may assume that w does not change appreciably, i.e. $w = 0$. Thus,

$$u_t = u(u-a)(1-u) + u_{xx},$$

wich is well known Nagumo's equation. Here $u = 0$ corresponds to the resting state and $u = 1$ to the excited state of the nerve. For this equation has been proved that both $u = 0$ and $u = 1$ are stable, whereas $u = a$ is unstable. Therefore, there is a threshold

phenomenon. The model with $w = 0$ thus predicts that a finite localised stimulus can be sufficient to trigger a wave front such that the nerve is in its rest state before its passage and its excited state afterwards. Thus the information is passed along the nerve. For a model of nerve conduction to be realistic there must be a mechanism for returning to the rest state, so that the nerve may again be excited by a stimulus. This is the role of the slow variable w.

4.3.1 CNN modelling

As we mentioned above, FitzHugh-Nagumo equation can be precented by a reaction-diffusion autonomous CNN where the cells are a degenerate special case of Chua's oscillator [113]. We map $u(x,t)$ into a CNN layer such that the state voltage of a CNN cell $x_{kl}(t)$ [27] at a grid point (k,l) is associated with $u(kh,t)$, $h = \Delta x$, and such that the second spatial partial derivative can be written as:

$$u_{xx} \sim \frac{1}{h^2}[u(x+h,t) - u(x,t) - (u(x,t) - u(x-h,t))] =$$

$$= \frac{1}{h^2}[u_{k+1,l} - 2u_{k,l} + u_{k-1,l}],$$

where h is the uniform grid size.

Using this approximation and by the similarity indicated in [113], it is easy to design the CNN for equation (4.65):

1). CNN cell dynamics:

$$\begin{aligned} \frac{du_i}{dt} &= u_i(u_i - a)(1 - u_i) - w_i + I_i^s \\ \frac{dw_i}{dt} &= \varepsilon(u_i - bw_i), \quad 1 \le i \le N. \end{aligned} \tag{4.66}$$

2). CNN synaptic law:

$$I_i^s = \frac{1}{h^2}(u_{i-1} - 2u_i + u_{i+1}). \tag{4.67}$$

Let us assume for simplicity that the grid size of our CNN model is $h = 1$, and let us denote the nonlinearity $f(u_i) = u_i^2(1+a) - u_i^3$.

Substituting (4.67) into (4.66) we obtain:

$$\begin{aligned} \frac{du_i}{dt} &= u_{i-1} - (2+a)u_i + u_{i+1}) + f(u_i) - w_i \qquad (4.68) \\ \frac{dw_i}{dt} &= \varepsilon(u_i - bw_i), \;\; 1 \leq i \leq N. \end{aligned}$$

System (4.68) is actually a system of ODEs which is identified as the state equation of an autonomous CNN made of n cells.

3). Boundary conditions - in fact, the boundary conditions affect here considerably the steady state solutions of CNN. We take periodic boundary conditions 1.13 (see Chapter1), because they yield the most regular topology of the array (all cells are identical), which will be conveniently exploited for the analysis.

4.3.2 Dynamics of the CNN model

We shall use an approximative method for studying the dynamics of CNN model (4.68), based on a special Fourier transform. The idea of using Fourier expansion for finding the solutions of PDEs is well known in physics. When all state trajectories of a CNN converge toward equilibrium points, an idea borrowed from physics and signal processing is to analyze them in spatial frequency domain. The array is viewed as a spatial digital filter, the coupling template parameters being the coefficients of a spatial infinite impulse response filter. Until the nonlinearity begins to modify significantly the states, this analysis is very accurate. Afterwards, it will depend on the type of template parameters. In the case where steady state trajectories oscillate, it is convenient to use both a space-frequency, as before, and a time-frequency transform.

Let us apply double Fourier transform $F(s,z)$ of functions $f_k(t)$ discrete in space and continuous in time:

$$F(s,z) = \sum_{k=-\infty}^{k=\infty} z^{-k} \int_{-\infty}^{\infty} f_k(t) exp(-st)\, dt. \qquad (4.69)$$

In fact, this is Continuous-Time Discrete-Space Fourier Transform (CTDSFT) from continuous time t and discrete space k to conti-

nuous temporal frequency ω, and continuous spatial frequency Ω, such that $z = exp(j\Omega)$, $s = j\omega$.

Applying the above transform (4.69) to the system (4.68) we obtain:

$$\begin{aligned} sU(s,z) &= z^{-1}U(s,z) - (2+a)U(s,z) + zU(s,z) \\ &\quad +F(s,z) - W(s,z) \\ sW(s,z) &= \varepsilon(U(s,z) - bW(s,z)). \end{aligned} \tag{4.70}$$

From (4.70) the double transform of u_j, $U(s,z)$ can be expressed as a function of the double Fourier transform of $f(u_j)$, $F(s,z)$:

$$U(s,z) = \frac{s+\varepsilon b}{s^2 + sA + \varepsilon B} N(s,z), \tag{4.71}$$

$A = a + 2 - z^{-1} - z + \varepsilon b$, $B = 1 + b(a+2) - bz^{-1} - bz$.

Therefore, the dynamical system (4.70) can be represented in the Lur'e form shown in Fig.18, where the linear part is the transfer function

$$H(s,z) = \frac{s+\varepsilon b}{s^2 + sA + \varepsilon B},$$

the nonlinear one is the function $N(s,z)$.

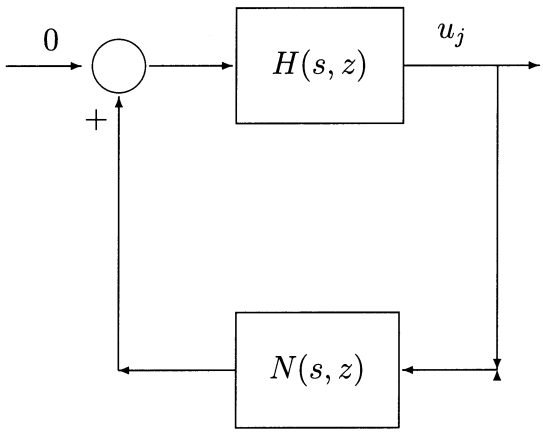

Fig. 18. Lur'e diagram for the transfer function $H(s,z)$.

According to the above Lur'e diagram (Fig. 18), the transfer function $H(s,z)$ can be presented in terms of ω_0 and Ω_0, i.e. $H(s,z) = H_{\Omega_0}(\omega_0)$:

$$H_{\Omega_0}(\omega_0) = \frac{U_{\Omega_0}(\omega_0)}{W_{\Omega_0}(\omega_0)}. \tag{4.72}$$

We are looking for possible periodic solutions of our CNN model (4.68) of the form:

$$u_i(t) = \xi(\Omega_0 i + \omega_0 t), \tag{4.73}$$

for some function $\xi : \mathbf{R} \to \mathbf{R}$ and for some $0 \leq \Omega_0 \leq 2\pi$, $\omega_0 = \frac{2\pi}{T_0}$, where $T_0 > 0$ is the minimal period of (4.73). For the circular array the possible values for Ω_0 can be easily obtained. As $u_i(t)$ is assumed to be periodic, with minimal period T_0, one has

$$\xi(\Omega_0 i + \omega_0 t) = \xi(\Omega_0 i + \omega_0 t + k\omega_0 T_0) \tag{4.74}$$

for any $k \in \mathbf{N}$. On the other hand, the periodic boundary conditions 1.13). impose that

$$\xi(\omega_0 t) = \xi(\Omega_0 N + \omega_0 t). \tag{4.75}$$

Combining (4.74) with $i = 0$ and (4.75), we get

$$\Omega_0 = \frac{K}{N}\omega_0 T_0 = \frac{2\pi K}{N}, 0 \leq K \leq N-1, \tag{4.76}$$

where the range of K is determined by the condition $0 \leq \Omega_0 \leq 2\pi$.

Now according to (4.73) we shall suppose that the state variable has the form:

$$u_i(t) = U_{m_0} sin(\omega_0 t + i\Omega_0). \tag{4.77}$$

which amounts to specify as ansatz for (4.73), which is $\xi(\psi) = U_{m_0} sin\psi$.

Then we shall approximate the output by the fundamental component of its Fourier expansion:

$$w_i(t) \simeq W_{m_0} sin(\omega_0 t + i\Omega_0), \tag{4.78}$$

with

$$W_{m_0} = \frac{1}{\pi}\int_{-\pi}^{\pi} N(U_{m_0} sin\psi) sin\psi \, d\psi = U_{m_0}^3(-3/4). \tag{4.79}$$

Thus the ratio of the CTDSFTs of these periodic solutions is:

$$H_{\Omega_0}(\omega_0) = \frac{U_{\Omega_0}(\omega_0)}{W_{\Omega_0}(\omega_0)} = \frac{U_{m_0}}{W_{m_0}}. \tag{4.80}$$

On the other side if we substitute $s = j\omega_0$ and $z = exp(j\Omega_0)$ in (4.71) we obtain:

$$H_{\Omega_0}(\omega_0) = \frac{i\omega_0 + \varepsilon b}{-\omega_0^2 + i\omega_0\hat{A} + \varepsilon\hat{B}}, \tag{4.81}$$

where

$$\hat{A} = a + 2 - 2cos\Omega_0 + \varepsilon b, \quad \hat{B} = 1 - 2bcos\Omega_0 + b(a+2).$$

According to (4.80) and (4.81) the following constraints hold:

$$\begin{aligned} \Re(H_{\Omega_0}(\omega_0)) &= \frac{U_{m_0}}{W_{m_0}} \\ \Im(H_{\Omega_0}(\omega_0)) &= 0. \end{aligned} \tag{4.82}$$

Thus (4.76), (4.80) and (4.82) give us necessary set of equations for finding the unknowns U_{m_0}, ω_0, Ω_0. As we mentioned above we are looking for a periodic wave solution of (4.68), therefore U_{m_0} will determine approximate amplitude of the wave, and $T_0 = \frac{2\pi}{\omega_0}$ will determine the wave speed.

Combining (4.80) and (4.82) we get:

$$\begin{aligned} \frac{\omega_0^2(\hat{A} - \varepsilon b) + \varepsilon^2 b\hat{B}}{\omega_0^4 + \omega_0^2(\hat{A}^2 - 2\varepsilon\hat{B}) + \varepsilon^2\hat{B}^2} &= \frac{U_{m_0}}{W_{m_0}} \\ \frac{\omega_0(\varepsilon\hat{B} - \varepsilon b\hat{A}) - \omega_0^3}{\omega_0^4 + \omega_0^2(\hat{A}^2 - 2\varepsilon\hat{B}) + \varepsilon^2\hat{B}^2} &= 0. \end{aligned} \tag{4.83}$$

After solving (4.83) we obtain the solutions:

$$\begin{aligned} \omega_0 &= \sqrt{\varepsilon\hat{B} - \varepsilon b\hat{A}} \\ U_{m_0} &= \sqrt{\frac{4}{3}\frac{\varepsilon b^2\hat{A} - b\hat{A}^2 + \hat{A}\hat{B}}{b\hat{A} - \varepsilon b^2 - \hat{B}}} \end{aligned} \tag{4.84}$$

Now according to the describing function method, if for a given value of Ω_0 (4.76) we can find a solution (ω_0, U_{m_0}) of (4.83), then

we can predict the existence of a periodic solution with an amplitude U_{m0} and period of approximately $T_0 = \frac{2\pi}{\omega_0}$. Therefore the following theorem has been proved:

Theorem 4.2 *CNN model (4.68) of FitzHugh-Nagumo equation (4.65) with circular array of N cells has periodic state solutions $u_i(t)$ with a finite set of spatial frequences $\Omega_0 = \frac{2\pi K}{N}$, $0 \leq K \leq N-1$ and a period $T_0 = \frac{2\pi}{\omega_0}$.*

Remark 4.4 By applying the above Harmonic ballance method we have been able to obtain a characterization of the periodic steady state solutions of our CNN model. In order to validate the accuracy of the achieved results it would be useful to have a possible initial condition from which the network will reach, at steady state, a steady state solution characterized by the desired value of Ω_0. One such possibility is to take a initial condition $x_i = (0) = sin(\Omega_0 i)$, $1 \leq i \leq p$.

4.3.3 Propagation of solitary waves in the CNN model

In the literature concerning FitzHugh-Nagumo equation (4.65) [11], it is shown that under required conditions, there exists a solitary travelling wave solution of (4.65) for ε small corresponding to the triggered response of a nerve. The treshold behavior ensures that only stimuli above a certain level will trigger a nerve impulse. This impulse consists of a wave of excitation, the leading wave front, followed by a retractory period, when the nerve is not amenable to the triggering of another impulse, followed by relaxation to the steady state. Another nerve impulse may then be triggered.

Let us consider CNN model (4.68). For the system (4.68) the travelling wave solutions are:

$$\begin{aligned} u_i(t) &= u(\eta), \\ w_i(t) &= w(\eta), \quad 1 \leq i \leq N, \end{aligned} \tag{4.85}$$

where $\eta = t - ih$, $h > 0$- is a parameter.

If we compare the travelling wave solution (4.85) with the predicted periodic solutions (4.77), (4.78), we can see that they are similar $u(t-jh) \to U_{m_0} sin(\omega_0 t + i\Omega_0)$, $w(t-ih) \to W_{m_0} sin(\omega_0 t + i\Omega_0)$. Therefore, we are able to make a conclusion that our CNN model (4.68) of FitzHugh Nagumo equation has a solitary wave solution with period of the wave of approximatelly $T_0 = \frac{2\pi}{\omega_0}$ and with amplitude of the wave U_{m_0}.

Substituting (4.85) in (4.68) we obtain:

$$\begin{aligned} \dot{u} &= u(\eta - h) - 2u(\eta) - u(\eta + h) + f(u) + w(\eta) \\ \dot{w} &= \varepsilon(u - bw), \end{aligned} \tag{4.86}$$

where dot denotes differentiation with respect to η, $f(u) = u(u - a)(1 - u)$. Notice that η is the coordinate moving along the array with a velocity equal to $c = 1/h$. Then the two difference terms: $[(u(\eta - h) - u(\eta)] - (u(\eta) - u(\eta + h)]$, can be replaced approximatelly by the first derivatives $-\frac{\dot{u}}{h}$ and $+\frac{\dot{u}}{h}$, respectively. Hence, from (4.86) we obtain:

$$\dot{u} = \frac{1}{1+2c} f(u) + \frac{1}{1+2c} w, \qquad \dot{w} = \varepsilon(u - bw) \tag{4.87}$$

Let us assume that nonlinear function $f(u) = u(u - a)(1 - u)$ satisfies for some $a \in (0, 1)$ the following conditions:

$$\begin{aligned} f(0) = f(a) = f(1) = 0, \quad f < 0 \in (0, a) \\ f > 0 \in (a, 1) \qquad f'(0) < 0, \qquad f'(1) < 0, \\ F(1) = \int_0^1 f(z)dz > 0 \end{aligned} \tag{4.88}$$

Then the following theorem is known [11] for FitzHugh-Nagumo equation (4.65) with $f(u)$ satisfying (4.88):

Theorem 4.3 *The stationary problem (4.68) for FitzHugh-Nagumo equation with zero flux boundary conditions, where $f(u)$ satisfies (4.88), has three or more solutions with $0 \leq u \leq 1$. The two stationary solutions $u \equiv 0$ and $u \equiv 1$ are both asymptotically stable as solutions of the corresponding initial-boundary-value problem, whereas $u \equiv a$ is unstable.*

The phase plane for the stationary solutions of FitzHugh-Nagumo equation are given below:

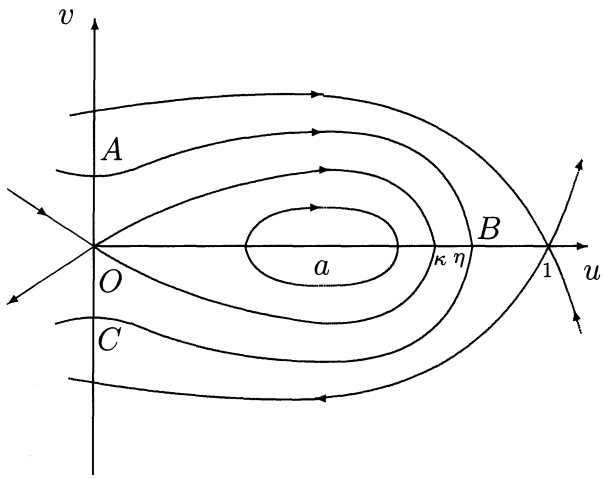

Fig.19. Phase plane for the stationary solutions.

By definition the equilibrium points of (4.87) should satisfy:

$$\begin{aligned} \frac{1}{1+2c} f(u^*) - w^* &= 0 \\ \varepsilon u^* - \varepsilon b w^* &= 0. \end{aligned} \tag{4.89}$$

Clearly, $u \equiv 0$, $u \equiv a$, and $u \equiv 1$ are solutions of the stationary problem. To prove asymptotic stability or instability we shall linearized (4.89) about $(0,0)$, $(1,0)$, $(a,0)$. The Jacobian matrix for (4.89) is:

$$J = \begin{vmatrix} \frac{1}{1+2c} f'(u) & \frac{1}{1+2c} \\ 1 & -b \end{vmatrix}.$$

Let us consider first the equilibrium point $(0,0)$. In this case we have the following eigenvalue equation:

$$\begin{vmatrix} -\frac{a}{1+2c} - \lambda & \frac{1}{1+2c} \\ 1 & -b-\lambda \end{vmatrix} = 0,$$

or

$$\lambda^2 + \lambda(b + \frac{a}{1+2c}) + \frac{1}{1+2c}(ab-1) = 0.$$

If $ab - 1 < 0$, then the origin is a saddle point. Analogous can be shown that $(1,0)$ is a saddle point too.

We require a trajectory from $(0,0)$ to $(1,0)$ in the phase plane. Any such wave front must be monotonic. It follows that the equilibrium points $(0,0)$ and $(1,0)$ cannot be centers or fosi, since solutions close to such points must oscillate. Trajectories which pass from one equilibrium point to another are known as heteroclinic orbits.

Let us write system (4.87) in the following way:

$$\dot{z} = X(z;\mu), \tag{4.90}$$

$z = (u,w)$, $\mu = (b,c,\varepsilon)$, $a_1 := (0,0)$, $a_2 := (1,0)$.

Then we can show that (4.90) has a heteroclinic solution $z_1^*(\eta)$ from a_1 to a_2 ($z_2^*(\eta)$ from a_2 to a_1) for certain parameter values. This solution corresponds to a travelling wave of FitzHugh Nagumo equation which satisfies:

$$lim_{\eta\to-\infty} z_1^*(\eta) = a_1, lim_{\eta\to+\infty} z_1^*(\eta) = a_2, \tag{4.91}$$

$$lim_{\eta\to-\infty} z_2^*(\eta) = a_2, lim_{\eta\to+\infty} z_2^*(\eta) = a_1, \tag{4.92}$$

Therefore the following theorem hold:

Theorem 4.4 *For CNN model of FitzHugh-Nagumo equation (4.68) where $f(u)$ satisfies (4.88), there is $c > 0$ such that there exists a wave front from 0 to 1.*

The phase plane for travelling wave solutions of FitzHugh Nagumo equation where $f(u)$ satisfies (4.88) is given below:

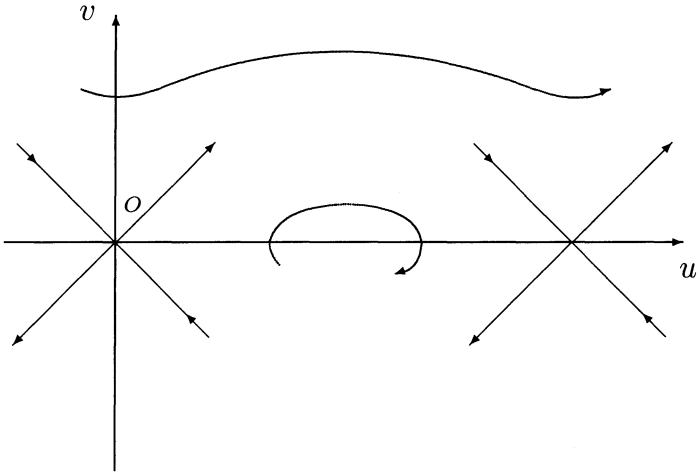

Fig. 20. Phase plane for the travelling wave solutions.

4.4 CNN model of Fisher's equation

Sixty years ago Fisher showed that the propagation of a mutant gene [11] can be modeled by a nonlinear reaction-diffusion partial differential equation (PDE):

$$\frac{\partial u}{\partial t} = D\frac{\partial^2 u}{\partial x^2} + qu(1-u). \tag{4.93}$$

This classic equation, also known as the "diffusional logistic" equation, has since been found to be useful in many other applications and has been widely studied [155]. In chemical media the function $u(t,x)$ is the concentration of the reactant, D represents its diffusion coefficient, and the positive constant q specifies the rate of the chemical reaction. In media of other natures u, D, q can represent different quantities. In general, medium described by (4.93) is often refered to as a bistable medium, because it has two homogeneous stationary states, $u = 0$ and $u = 1$.

In one-dimensional space (4.93) has received considerable attention [11]. On the other hand, many realistic systems are essentially two- or three-dimensional. In this section we shall construct CNN models of Fisher's equation (4.93) in one- and two-dimensional cases.

4.4.1 CNN model for one-dimensional Fisher's equation

After rescaling time $t' = qt$ and space $x' = (q/D)^{1/2}x$, and dropping the prime, (4.93) in one-dimensional space becomes:

$$u_t = u_{xx} + u(1-u). \tag{4.94}$$

As we mentioned above, Fisher equation (4.93) can be precented by a reaction-diffusion autonomous CNN where the cells are a degenerate special case of Chua's oscillator [113]. We map $u(x,t)$ into a CNN layer such that the state voltage of a CNN cell $x_{kl}(t)$ [27] at a grid point (k,l) is associated with $u(kh,t)$, $h = \Delta x$. Therefore, an one-dimensional Laplacian template will be in the following form:

$$A_1 = (1, -2, 1),$$

and the CNN model in this case is:

$$\frac{du_k}{dt} = (u_{k-1} - 2u_k + u_{k+1}) + u_k(1 - u_k), \tag{4.95}$$

$k = 1, \ldots, n$, $n = M.M$, where we have $M \times M$ cells.

For studying the dynamics of (4.95) we will use a describing function approach. We use the following double Fourier transform $F(s, z)$ of functions $f_k(t)$ discrete in space and continuous in time:

$$F(s, z) = \sum_{k=-\infty}^{k=\infty} z^{-k} \int_{-\infty}^{\infty} f_k(t) exp(-st)\, dt. \tag{4.96}$$

Therefore, applying the above transform to our CNN model (4.95), the network can be reduced to a Lur'e system [96]. In other words, we obtain:

$$sU(s, z) = (z^{-1}U(s, z) - 2U(s, z) + zU(s, z)) + U(s, z)(1 - U^2(s, z)). \tag{4.97}$$

We can express $U(s, z)$ as a function of the nonlinearity $N(U(s, z)) = U(s, z)(1 - U^2(s, z))$ from the above equation:

$$U(s, z) = \frac{1}{s + 2 - z^{-1} - z} N(U(s, z)) \tag{4.98}$$

Let us denote $H(s, z) = \frac{1}{s+2-z^{-1}-z}$. $H(s, z)$ is called transfer function. In the double Fourier transform (4.96) we suppose that $s = j\omega_0$ and $z = exp(j\Omega_0)$, $j = \sqrt{-1}$, where ω_0 is a temporal frequency, Ω_0 is a spatial frequency. If we substitute s and z in $H(s, z)$ we obtain the following transfer function:

$$H_{\Omega_0}(\omega_0) = \frac{1}{i\omega_0 + 2 - 2cos\Omega_0} \tag{4.99}$$

Now, we are looking for possible periodic solutions of (4.95) and we will suppose that the state variable has the form:

$$u_k(t) = U_{m_0} sin(\omega_0 t + k\Omega_0). \tag{4.100}$$

The amplitude U_{m_0}, the temporal frequency ω_0 and the spatial frequency Ω_0 are therefore unknowns to be determined. Now, applying

the describing function method we obtain the following equation for the spatial frequency Ω_0 and temporal frequency ω_0:

$$\frac{2 - 2cos\Omega_0}{(2 - 2cos\Omega_0)^2 + \omega_0^2} = 1. \tag{4.101}$$

According to the describing function method, if for a given value of Ω_0 we can find a solution (ω_0, U_{m_0}), then we can predict the existence of a periodic solution of (4.95) with an amplitude of approximately U_{m_0} and a minimal period of approximately $T_0 = \frac{2\pi}{\omega_0}$ [48]. If we take the periodic boundary conditions $u_0 \equiv u_n$, $u_{n+1} \equiv u_1$, which make the array circular, we have a finite set of frequencies:

$$\Omega = \frac{2\pi K}{n}, 0 \leq K \leq n - 1. \tag{4.102}$$

Therefore we have proved the following theorem:

Theorem 4.5 *CNN model of Fisher equation (4.95) with periodic boundary conditions, made of $n = M.M$ universal cells, has periodic solutions, whose spatial frequencies are $\Omega_0 = \frac{2\pi K}{n}$, $0 \leq K \leq n - 1$, minimal period is $T_0 = \frac{2\pi}{\omega_0}$ and the amplitude is U_{m_0}.*

Remark 4.5 In [11] it was shown that (4.93) admits a one-parameter family of nontrivial standing- wave solutions. In this case there exist bounded oscillating and separatrix solutions and two families of unbounded solutions. The unbounded solutions are given for $1/2 \leq u \leq 1$ by: $u(x) = 1 - C_1 cosh(x)$, and for $u < 1/2$ by: $u(x) = 1 \pm C_2 sinh(x)$, where C_1 and C_2 are positive constants parametrizing different solutions within each family. This is similar to the periodic solutions we found by using describing function method.

4.4.2 CNN model of two-dimensional Fisher's equation

In a two-dimensional isotropic medium Fisher's equation (4.93) in rescaled variables is:

$$u_t = u_{xx} + u_{yy} + u(1 - u). \tag{4.103}$$

The solution $u(x, y, t)$ of (4.103) is a continuous function of the time t and the space variables x, y. We shall approximate the function $u(x, y, t)$ by a set of functions $u_{kl}(t)$ which are defined as

$$u_{kl}(t) = u(kh_x, lh_y, t),$$

where h_x and h_y are the space intervals in the x and y coordinates. Then, two-dimensional discretized Laplacian A template will be in the following form:

$$A_2 = \begin{pmatrix} 0 & 1 & 0 \\ 1 & -4 & 1 \\ 0 & 1 & 0 \end{pmatrix}.$$

The CNN model for two-dimensional Fisher's equation (4.103) will be:

$$\begin{aligned} \frac{du_{kl}}{dt} &= (u_{kl-1l}(t) + u_{kl+1}(t) - 4u_{kl}(t) + u_{k-1l}(t) \\ &+ u_{k+1l}(t)) + u_{kl}(t)(1 - u_{kl}(t)) = (u_{kl-1}(t) + u_{kkl+1}(t) \\ &- 4u_{kl}(t) + u_{k-1l}(t) + u_{k+1l}(t)) + n_{kl}(t), \end{aligned} \tag{4.104}$$

$1 \leq k \leq M$, $1 \leq l \leq M$. For studying the dynamical behavior of our CNN model (4.104) we shall apply again the harmonic balance method. The state variable $u_{kl}(t)$ are functions depending on three arguments - two discrete space arguments j, k, and one continuous time t. We apply the following double Fourier transform $F(s, z_1, z_2)$ of functions $f_{kl}(t)$, continuous in time and discrete in space:

$$F(s, z_1, z_2) = \sum_{k=-\infty}^{\infty} z_1^{-k} \sum_{l=-\infty}^{\infty} z_2^{-l} \int_{-\infty}^{\infty} f_{kl}(t) exp(-st) dt. \tag{4.105}$$

Applying the above transform to (4.105) we obtain:

$$\begin{aligned} sU(s, z_1, z_2) &= z_2^{-1}U(s, z_1, z_2) + z_2U(s, z_1, z_2) \\ &- 4U(s, z_1, z_2) + z_1^{-1}U(s, z_1, z_2) + z_1U(s, z_1, z_2) \\ &+ N(U(s, z_1, z_2)). \end{aligned} \tag{4.106}$$

Let us express the state $U(s, z_1, z_2)$ as a function of the nonlinearity $N(U(s, z_1, z_2)$:

$$U(s, z_1, z_2) = \frac{1}{s + 4 - z_1^{-1} - z_1 - z_2^{-1} - z_2} N(U(s, z_1, z_2)). \tag{4.107}$$

According to [48] the transfer function $H(s, z_1, z_2)$ can be presented from the above equation as: $H(s, z_1, z_2) = \frac{1}{s+4-z_1^{-1}-z_1-z_2^{-1}-z_2}$. In the double Fourier transform (4.105) we suppose that $s = j\omega_0$, $z_1 = exp(j\Omega_1)$, $z_2 = exp(j\Omega_2)$, where ω_0, Ω_1, Ω_2 are temporal and two spatial frequencies respectively, $j = \sqrt{-1}$. Thus we can express the transfer function H in terms of ω_0, Ω_1, Ω_2 as follows:

$$H_{\Omega_1,\Omega_2}(\omega_0) = \frac{1}{j\omega_0 + 4 - 2cos\Omega_1 - 2cos\Omega_2}. \tag{4.108}$$

Now we are looking for the periodic solutions of (4.104) of the form:

$$u_{kl}(t) = U_{m_0} sin(\omega_0 t + k\Omega_1 + l\Omega_2), \tag{4.109}$$

where the temporal frequency is $\omega_0 = \frac{2\pi}{T_0}$, $T_0 > 0$ is the minimal period. If we take periodic boundary conditions for our CNN model (4.104),which make the array circular we get

$$\Omega_1 + \Omega_2 = \frac{2K\pi}{n}, 0 \leq K \leq n-1, n = M.M. \tag{4.110}$$

According to the describing function method we assume that the corresponding nonlinearity $n_{kl}(t)$ is expanded in Fourier series as: $n_{kl}(t) = N_0(U_{m_0})U_{m_0} + N_1(U_{m_0})U_{m_0} sin(\omega_0 t + k\Omega_1 + l\Omega_2) + \ldots$, where the real gains can be calculated by the following formula:

$$N_0(U_{m_0}) = \frac{1}{2\pi U_{m_0}} \int_{-\pi}^{\pi} N(U_{m_0} sin\psi) d\psi = -\frac{U_{m_0}}{2}, \tag{4.111}$$

$$N_1(U_{m_0}) = \frac{1}{\pi U_{m_0}} \int_{-\pi}^{\pi} N(U_{m_0} sin\psi) sin\psi d\psi = 1. \tag{4.112}$$

Then according to [48] the following constraints hold for the existence of periodic solutions of (4.104):

$$\begin{aligned} U_{m_0}[1 + N_0(U_{m_0}) H_{\Omega_1,\Omega_2}(0)] &= 0, \\ 1 + N_1(U_{m_0}) H_{\Omega_1,\Omega_2}(i\omega_0) &= 0. \end{aligned} \tag{4.113}$$

Combining (4.110), (4.111), (4.112) and (4.113) we obtain the following system for the unknowns U_{m_0}, ω_0, Ω_1 and Ω_2:

$$\begin{aligned} 1 - \frac{U_{m_0}}{2}\frac{1}{4 - 2cos\Omega_1 - 2cos\Omega_2} &= 0 \\ 1 + \frac{4 - 2cos\Omega_1 - 2cos\Omega_2}{\omega_0^2 + (4 - 2cos\Omega_1 - 2cos\Omega_2)^2} &= 0 \\ 1 + \frac{-\omega_0}{w_0^2 + (4 - 2cos\Omega_1 - 2cos\Omega_2)^2} &= 0 \\ \Omega_1 + \Omega_2 = \frac{2K\pi}{n}, 0 \leq K \leq n - 1. \end{aligned} \tag{4.114}$$

Let us denote by $A = 4 - 2cos\Omega_1 - 2cos\Omega_2$. Therefore, the first equation of (4.114) will become: $1 - \frac{U_{m_0}}{2}\frac{1}{A} = 0$, and it follows: $A > 0$. After some trigonometrical calculations we get:

$$\Omega_1 - \Omega_2 > 2arccos(sec\frac{K\pi}{n}), 0 \leq K \leq n - 1. \tag{4.115}$$

Combining (4.115) with the last equation of (4.114) we obtain the following inequalities for Ω_1 and Ω_2:

$$\begin{aligned} 0 &\leq \Omega_1 < \frac{K\pi}{n} + arccos(sec\frac{K\pi}{n}), \\ 0 &\leq \Omega_2 < \frac{K\pi}{n} - arccos(sec\frac{K\pi}{n}), 0 \leq K \leq n - 1. \end{aligned} \tag{4.116}$$

Then summing second and third equations of (4.114) we obtain: $\omega_0 = -A = 2cos\Omega_1 + 2cos\Omega_2 - 4$. Expressing U_{m_0} from the first equation of (4.114) we get: $U_{m_0} = 2(4 - 2cos\Omega_1 - 2cos\Omega_2)$. Thus we have solved system (4.114) and therefore the following theorem has been proved.

Theorem 4.6 *CNN model of Fisher's equation (4.104) with circular array of M cells has periodic solution with period $T_0 = \frac{2\pi}{\omega_0}$ and amplitude U_{m_0} for all $\Omega_1 + \Omega_2 = \frac{2K\pi}{n}, 0 \leq K \leq n - 1$.*

Remark 4.6 In [11] it was shown that the simplest solution involving both x and y space variables is: $u(x, y, t) = \{1 + exp[\frac{(x-ct)sin\varphi \mp ycos\varphi}{\sqrt{6}}]\}^{-2}$. This is similar to the result we proved with Theorem 4.6.

4.5 CNN model of Brusselator equation

One of the most widely studied nonlinear reaction-diffusion partial differential equation is the Brusselator, whose dimensionless equation is:

$$\begin{aligned} \frac{\partial u}{\partial t} &= a-(b+1)u+u^2v+ \\ &\quad +D_1\nabla^2 u \\ \frac{\partial v}{\partial t} &= bu-u^2v+D_2\nabla^2 v, \end{aligned} \tag{4.117}$$

where $\nabla^2 = \frac{\partial^2}{\partial u^2}+\frac{\partial^2}{\partial v^2}$ is a two-dimensional Laplacian operator in $\mathbf{R}^2$, a, b are coefficients of the chemical reaction which give the concentration of initial substances, D_1, D_2 are diffusion coefficients. The Brusselator equation (4.117) is well known in chemical kinetics as an ideal system for studying the dissipative structures. In some sense this system behaves as harmonic oscillator. In [100] it is shown that the dynamics of Brusselator equation has global periodicity which depends on the initial and boundary conditions.

There are several ways to approximate the Laplacian operator ∇^2 in discrete space by a CNN synaptic law with an appropriate A-template [113]. We choose the following template for the two-dimensional reaction- diffusion CNN model:

$$A=\begin{pmatrix} 0 & 1 & 0 \\ 1 & -4 & 1 \\ 0 & 1 & 0 \end{pmatrix}. \tag{4.118}$$

Then our CNN model for the Brusselator equation (4.117) with A-template (4.102) can be written in the following form:

$$\begin{aligned} u_{kl} &= a-(b+1)u_{kl}+u_{kl}^2v_{kl}+ \\ &+D_1[u_{k+1l}+u_{k-1l}+u_{kl+1}+u_{kl-1}-4u_{kl}] \\ v_{kl} &= bu_{kl}-u_{kl}^2v_{kl}+D_2[v_{k+1l}+ \\ &+v_{k-1l}+v_{kl+1}+v_{kl-1}-4v_{kl}], \end{aligned} \tag{4.119}$$

$1\le k\le M$, $1\le l\le M$.

For the analysis of this CNN model we shall apply the describing function method. As mentioned before in this case the state variable

$u_{kl}(t)$ are functions depending on three arguments - two discrete space arguments k, l, and one continuous time t. We use again the following double Fourier transform $F(s, z_1, z_2)$ of functions $f_{kl}(t)$, continuous in time and discrete in space:

$$F(s, z_1, z_2) = \sum_{k=-\infty}^{\infty} z_1^{-k} \sum_{l=-\infty}^{\infty} z_2^{-l}. \cdot \int_{-\infty}^{\infty} f_{kl}(t) exp(-st) dt. \tag{4.120}$$

Applying the above transform to our CNN model (4.119) we obtain:

$$\begin{aligned} sU &= a - (b+1)U + U^2V + D_1[z_1U + \\ &\quad + z_1^{-1}U + z_2U + z_2^{-1}U - 4U], \\ sV &= bU - U^2V + D_2[z_1V + z_1^{-1}V + \\ &\quad + z_2V + z_2^{-1}V - 4V], \end{aligned} \tag{4.121}$$

where we suppose that $s = j\omega_0$, $z_1 = exp(j\Omega_1)$, $z_2 = exp(j\Omega_2)$, ω_0, Ω_1, Ω_2 are a temporal and two spatial frequencies, respectively, $j = \sqrt{-1}$.

According to the describing function method (see Appendix C), the transfer function $H(s, z_1, z_2)$ can be presented from the above equation as:

$$\begin{aligned} &H(s, z_1, z_2) = \\ &= \frac{D_2(z_1 + z_1^{-1} + z_2 + z_2^{-1} - 4) - s}{s + 1 - D_1(z_1 + z_1^{-1} + z_2 + z_2^{-1} - 4)} = \frac{U}{V}. \end{aligned} \tag{4.122}$$

Since we are looking for eventual periodic solutions, we shall suppose that the state has the following form:

$$u_{kl}(t) = U_{m_0} sin(\omega_0 t + k\Omega_1 + l\Omega_2), \tag{4.123}$$

where the temporal frequency is $\omega_0 = \frac{2\pi}{T_0}$, $T_0 > 0$ is the minimal period. If we take the periodic boundary conditions for our CNN model (4.119), making the array circular, we get:

$$\Omega_1 + \Omega_2 = \frac{2K\pi}{n}, 0 \leq K \leq n-1, n = M.M. \tag{4.124}$$

According to the describing function method, we shall approximate the output $v_{kl}(t)$ by the fundamental component of its Fourier expansion:

$$v_{kl}(t) \approx V_{m_0} sin(\omega_0 t + k\Omega_1 + l\Omega_2), \tag{4.125}$$

with

$$V_{m_0} = \frac{1}{\pi}\int_{-\pi}^{\pi} f(U_{m_0} sin\psi) d\psi, \tag{4.126}$$

where f is the piecewise-linear sigmoid output function $f(x) = \frac{1}{2}(|x+1| - |x-1|)$. So we obtain: $V_{m_0} = 2U_{m_0}$.

We shall express now the transfer function H in terms of ω_0, Ω_1, Ω_2:

$$H_{\Omega_1,\Omega_2}(\omega_0) = \tag{4.127}$$
$$= \frac{D_2(2cos\Omega_1 + 2cos\Omega_2 - 4) - i\omega_0}{i\omega_0 + 1 - D_1(2cos\Omega_1 + 2cos\Omega_2 - 4)}.$$

According to (4.122) and (4.127) the following constraints on its real and imaginary parts hold:

$$\Re(H) = \frac{D_2 B - D_2 D_1 B^2 - \omega_0^2}{(1 - D_1 B)^2 + \omega_0^2} = \frac{U_{m_0}}{V_{m_0}}, \tag{4.128}$$

$$\Im(H) = \frac{(D_1 B - 1 - D_2 B)\omega_0}{(1 - D_1 B)^2 + \omega_0^2} = 0, \tag{4.129}$$

where $B = 2cos\Omega_1 + 2cos\Omega_2 - 4$.

If, for a given value of Ω_1, $0 \leq \Omega_1 < 2\pi$, we can find a solution $(\omega_0, \Omega_2, U_{m_0}, V_{m_0})$ to these two equations, the describing function method predicts the existence of a periodic solution with an amplitude approximately U_{m_0} and a minimal period $T_0 = \frac{2\pi}{\omega_0}$ [96]. Therefore from (4.114), (4.128) and (4.129) we get the following system for the unknowns Ω_2, ω_0, V_{m_0}:

$$\begin{aligned} &\Omega_1 + \Omega_2 = \frac{2K\pi}{n}, \\ &D_1 B - 1 - D_2 B = 0, \\ &\frac{D_2 B - D_2 D_1 B^2 - \omega_0^2}{(1 - D_1 B)^2 + \omega_0^2} = \frac{1}{2}. \end{aligned} \tag{4.130}$$

From the second equation of (4.130) we obtain $B = \frac{1}{D_1 - D_2}$. Then combining with the first equation of (4.130) we get:

$$\Omega_1 = \frac{K\pi}{n} + arccos[\frac{4(D_1 - D_2) + 1}{4cos\frac{k\pi}{n}(D_1 - D_2)}],$$

$$\Omega_2 = \frac{K\pi}{n} - arccos[\frac{4(D_1 - D_2) + 1}{4cos\frac{k\pi}{n}(D_1 - D_2)}],$$

$0 \leq K \leq n - 1$. Solving the third equation of (4.130) with respect to ω_0 we obtain:

$$\omega_0 = \sqrt{\frac{B(D_2 + 4D_1) - B^2(D_2 D_1 + 2D_1^2) - 2}{3}}.$$

Therefore the following theorem has been proved:

Theorem 4.7 *CNN model (4.119) of the Brusselator equation (4.117) with circular array of $n = M.M$ cells has periodic solution with period $T_0 = \frac{2\pi}{\omega_0}$ and amplitude U_{m_0} for all $\Omega_1 + \Omega_2 = \frac{2K\pi}{n}, 0 \leq K \leq n-1$.*

4.5.1 Comparison with the classical results

Let us linearized the Brusselator equation (4.117) using the following change of variables:

$$u = a + \tilde{u},$$

$$v = \frac{b}{a} + \tilde{v}.$$

Then the linearized system with respect to the variables $\tilde{u}$, $\tilde{v}$ can be written as:

$$\frac{\partial}{\partial t}\begin{pmatrix} \tilde{u} \\ \tilde{v} \end{pmatrix} = L\begin{pmatrix} \tilde{u} \\ \tilde{v} \end{pmatrix},$$

where the operator L is parabolic of the following form:

$$L = \begin{pmatrix} b - 1 + D_1\nabla^2 & a^2 \\ -b & -a^2 + D_2\nabla^2 \end{pmatrix}.$$

Then the solutions of the linearized Brusselator equation are:

$$\begin{pmatrix} \tilde{u} \\ \tilde{v} \end{pmatrix} = \sum_m d_m e^{\omega_m t} \begin{pmatrix} c_1 \\ c_2 \end{pmatrix} sin \frac{m\pi K}{n}, \tag{4.131}$$

$$m = 1, 2, \ldots,$$

$0 \leq K \leq n$, n is the dimension of the linearized system.

According to [100] for Dirichlet boundary conditions the Brusselator equation will have periodic solutions if the diffusion coeffisients satisfy the following inequality:

$$D_2 - D_1 < \frac{n^2}{\pi^2}, \tag{4.132}$$

Moreover, if $D_1 = D_2 = D$, we obtain $D < \frac{an^2}{\pi^2}$. In other words, if the values of the diffusion coefficients are close to each other then periodic solutions arrise for the Brusselator equation (4.101).

There are many interesting applications in biology, in which chemical reactions can be produced in the conditions of closed geometry. For example, a surface of a sphere, which is the cell membrane. Then we have periodic boundary conditions of the type:

$$\tilde{u}(0) = \tilde{u}(n),$$

$$\tilde{v}(0) = \tilde{v}(n).$$

In this case the periodic solutions of the Brusselator equation are of the following form:

$$\begin{pmatrix} \tilde{u} \\ \tilde{v} \end{pmatrix} = \begin{pmatrix} c_1 \\ c_2 \end{pmatrix} e^{\omega_m t} e^{\frac{2\pi i q K}{n}}, q = 0, 1, \ldots. \tag{4.133}$$

In other words nonhomogeneous solutions with a space periodicity arrise. Now if we compare the obtained results in this section with the classsical ones (4.133), we can see the similarity of the periodic solutions.

4.6 CNN model of Toda Lattice equation

In general, one-dimensional lattices are described by a set of n structually identical ODE's (first or second order) with local coupling between the states:

$$\Delta x_k = f(x_{k-1}, x_k, x_{k+1}),$$

where Δ denotes the differential operator. Some prominent examples of such equations are discrete Korteweg-de-Vries equation, modified KdV equation, the self-dual network equation, etc. The Toda lattice equations can be obtained from KdV by a discretization process [148,149].

Under certain restrictions, nonlinear cellular neural networks (CNNs) come very close to Toda lattice equations. CNN is a high-dimensional dynamic nonlinear circuit having a mainly locally recurrent circuit topology.

The well-known state equation of Toda lattice is [148]:

$$\begin{aligned} \frac{dx_k}{dt} &= (x_k + a)(y_k - y_{k+1}), \\ \frac{dy_k}{dt} &= (y_k + b)(x_{k-1} - x_k), \end{aligned} \tag{4.134}$$

$$1 \leq k \leq p = M.M.$$

Theorem 4.8 *The state equation of Toda lattice (4.134) is equivalent to the state equation of an autonomous CNN.*

Proof: We shall consider LC transmission line with nonlinear capacitors and inductors characterized by a strictly-monotonically increasing characteristics. Their equations are the following:

Nonlinear capacitor:

$$i_{C_k} = C(v_{C_k})\frac{dv_{C_k}}{dt}, \tag{4.135}$$

$$(C(v_{C_k}) = \frac{q_{C_k}(v_{C_k})}{dv_{C_k}}),$$

where i_{C_k} is capacitor current, v_{C_k}-capacitor voltage, q- capacitance.

Nonlinear inductor:

$$v_{L_k} = L(i_{L_k})\frac{di_{L_k}}{dt}, \tag{4.136}$$

$$(L(i_{L_k}) = \frac{d\varphi_{L_k}(i_{L_k})}{di_{L_k}}),$$

i_{L_k} -inductor current, v_{L_k} - inductor voltage, φ -inductance.

From the other point of view, according to the Definition 1.2 we have:

CNN cell dynamics of an autonomous CNN:

$$\frac{dv_{C_k}}{dt} = \frac{1}{C(v_{C_k})}I_k^s. \tag{4.137}$$

CNN synaptic law:

$$I_k^s = i_{L_k} - i_{L_{k+1}}. \tag{4.138}$$

Substituting (4.138) into (4.137) and making use of (4.136) we get:

$$\left| \begin{array}{l} \frac{dv_{C_k}}{dt} = \frac{1}{C(v_{C_k})}(i_{L_k} - i_{L_{k+1}}) \\ \frac{di_{L_k}}{dt} = \frac{1}{L(i_{L_k})}(v_{C_{k-1}} - v_{C_k}). \end{array} \right. \tag{4.139}$$

Let us choose the nonlinear capacitor and inductor's characteristics to be exponential functions, similar to the pn-junction diode equation [17]. In other words, we have:

$$v_{C_k} = e^{q_{C_k}} - D_1, \tag{4.140}$$

D_1-constant parameter. Therefore, $q_{C_k} = ln(v_{C_k}+D_1)$, and $C(v_{C_k}) = \frac{dq_{C_k}}{dv_{C_k}} = \frac{1}{v_{C_k}+D_1}$.

In the same way we choose:

$$i_{L_k} = e^{\varphi_{L_k}} - D_2, \tag{4.141}$$

D_2 -constant parameter. Thus, $\varphi_{L_k} = ln(i_{L_k} + D_2)$, $\Rightarrow L(i_{L_k}) = \frac{d\varphi_{L_k}}{di_{L_k}} = \frac{1}{i_{L_k}+D_2}$.

If we substitute $C(v_{C_k})$ and $L(i_{L_k})$ in (4.139) we obtain:

$$\left| \begin{array}{l} \frac{dv_{C_k}}{dt} = (v_{C_k} + D_1)(i_{L_k} - i_{L_{k+1}}), \\ \frac{di_{L_k}}{dt} = (i_{L_k} + D_2)(v_{C_{k-1}} - v_{C_k}), \end{array} \right. \tag{4.142}$$

$$1 \leq k \leq p.$$

Denoting $v_{C_k} \equiv x_k$, $v_{C_{k-1}} \equiv x_{k-1}$, $i_{L_k} \equiv y_k$, $i_{L_{k+1}} \equiv y_{k+1}$, $D_1 \equiv a$, $D_2 \equiv b$ we obtain (4.134) which is the Toda lattice equation. Therefore, (4.134) is also an equation of an autonomous CNN. Theorem is proved.

Moreover, system (4.134) is the state equation of nonlinear autonomous CNN, where the templates A and $\hat{A}$ are respectively:

$$A = \begin{bmatrix} 0 & a & -a \\ b & -b & 0 \end{bmatrix}, \hat{A} = \begin{bmatrix} 0 & x_k y_k & -x_k y_{k+1} \\ y_k x_{k-1} & -y_k x_k & 0 \end{bmatrix}.$$

For the output of our CNN model we will take the piecewise-linear function (1.14). Boundary and initial conditions will be discussed in the next section.

4.6.1 Dynamics of the CNN model

We use the following double Fourier transform $F(s,z)$ of functions $f_k(t)$ discrete in space and continuous in time:

$$F(s,z) = \sum_{k=-\infty}^{k=\infty} z^{-k} \int_{-\infty}^{\infty} f_k(t) exp(-st)\, dt. \tag{4.143}$$

Therefore, applying the above transform to our CNN model (4.142), the network can be reduced to a Lur'e system (see Appendix C). In other words, we obtain:

$$\left| \begin{array}{l} sX(s,z) = (X(s,z) + a)(Y(s,z) - zY(s,z)), \\ sY(s,z) = (Y(s,z) + b)(z^{-1}X(s,z) - X(s,z)). \end{array} \right. \tag{4.144}$$

We can express from (4.144) $X(s,z)$:

$$X(s,z) = \frac{s(1-z) + a(z^{-1} + z - 2)}{b(z^{-1} + z - 2) + s(z^{-1} - 1)} Y(s,z). \tag{4.145}$$

Let us denote $H(s,z) = \frac{s(1-z)+a(z^{-1}+z-2)}{b(z^{-1}+z-2)+s(z^{-1}-1)}$. Therefore, (4.145) can be presented by the Lur'e diagram (see Fig.18). $H(s,z)$ is the

transfer function, $f(.)$ is the piecewise-linear output function (1.14) of our autonomous CNN model.

In the double Fourier transform (4.143) we suppose that $s = j\omega_0$ and $z = exp(j\Omega_0)$, $j = \sqrt{-1}$, where ω_0 is a temporal frequency, Ω_0 is a spatial frequency. According to the Lur'e diagram (Fig.18) the transfer function $H(s, z) = H_{\Omega_0}(\omega_0)$ can be presented as:

$$H_{\Omega_0}(\omega_0) = \frac{X_{\Omega_0}(\omega_0)}{Y_{\Omega_0}(\omega_0)}. \tag{4.146}$$

If we substitute s and z in $H(s, z)$ we obtain the following transfer function:

$$H_{\Omega_0}(\omega_0) = \frac{j\omega_0(1 - cos\Omega_0) + U}{V + j\omega_0(cos\Omega_0 - 1)}, j = \sqrt{-1}, \tag{4.147}$$

where $U = \omega_0 sin\Omega_0 + a(2cos\Omega_0 - 2)$, $V = b(2cos\Omega_0 - 2) + \omega_0 sin\Omega_0$.

Now, we are looking for possible periodic solutions of (4.142) and we shall suppose that the state variable has the form:

$$x_k(t) = X_{m_0} sin(\omega_0 t + k\Omega_0). \tag{4.148}$$

The amplitude X_{m_0}, the temporal frequency ω_0 and the spatial frequency Ω_0 are therefore unknowns to be determined. We shall approximate the output by the fundamental component of its Fourier expansion:

$$y_k \cong Y_{m_0} sin(\omega_0 t + k\Omega_0), \tag{4.149}$$

with

$$Y_{m_0} = \frac{1}{\pi} \int_{-\pi}^{\pi} f(X_{m_0} sin\psi) sin\psi \, d\psi. \tag{4.150}$$

Applying (4.150) to the output function (1.14) we obtain:

$$Y_{m_0} = 2X_{m_0}. \tag{4.151}$$

The approximation (4.150) is made such that the ratio of these periodic solutions is simply:

$$\frac{X_{\Omega_0}(\omega_0)}{Y_{\Omega_0}(\omega_0)} = \frac{X_{m_0}}{Y_{m_0}}. \tag{4.152}$$

Therefore, from (4.146) and (4.152) we get the following constraints for the real and imaginary part of the transfer function $H_{\Omega_0}(\omega_0)$:

$$\left| \begin{array}{l} \Re(H_{\Omega_0}(\omega_0)) = \frac{X_{m_0}}{Y_{m_0}}, \\ \Im(H_{\Omega_0}(\omega_0)) = 0. \end{array} \right. \tag{4.153}$$

Thus, from (4.147) and (4.153) we get:

$$\left| \begin{array}{l} \Re(H_{\Omega_0}(\omega_0)) = \frac{UV-\omega_0^2(1-cos\Omega_0)^2}{V^2+\omega_0^2(cos\Omega_0-1)^2} = \frac{X_{m_0}}{Y_{m_0}} = \frac{1}{2}, \\ \Im(H_{\Omega_0}(\omega_0)) = \frac{\omega_0(1-cos\Omega_0)(U+V)}{V^2+\omega_0^2(cos\Omega_0-1)^2} = 0. \end{array} \right. \tag{4.154}$$

According to the describing function method, if for a given value of Ω_0 we can find a solution (ω_0, X_{m_0}) of (4.154), then we can predict the existence of a periodic solution with an amplitude of approximately X_{m_0} and a minimal period of approximately $T_0 = \frac{2\pi}{\omega_0}$ [96].

From the second equation of (4.154) we obtain, that if $\omega_0 \neq 0$ and $\Omega_0 \neq 2K\pi$, $K = 0, \pm 1, \pm 2, \ldots$, then

$$\omega_0 = \frac{(a+b)(1-cos\Omega_0)}{sin\Omega_0}.$$

If we take the periodic boundary conditions, defined in chapter 1, i.e. the array is circular, we have a finite set of frequencies:

$$\Omega = \frac{2\pi K}{p}, 0 \leq K \leq p-1. \tag{4.155}$$

Proposition 4.3 *CNN model of Toda lattice equation (4.134) with periodic boundary conditions, made of $p = M.M$ universal cells, has periodic solutions, whose spatial frequencies are $\Omega_0 = \frac{2\pi K}{p}$, $0 \leq K \leq p-1$, minimal period is $T_0 = \frac{2\pi}{\omega_0}$ and the amplitude is X_{m_0}.*

4.6.2 Solitary waves in the CNN model

It is known in the literature [45] that a sinosoidal initial condition for the lattice equation with piece-wise linear characteristics is repeated periodically, though the system is nonlinear. For that

reason we will seek for the existence of soliton solutions of our CNN model of Toda lattice equation (4.134).

For the system (4.134) travelling wave solutions are:

$$\left| \begin{array}{l} x_k(t) = x(\eta), \\ y_k(t) = y(\eta), \end{array} \right. \tag{4.156}$$

$$1 \leq k \leq p,$$

where $\eta = t - kh$, $h > 0$- is a parameter. Substituting (4.156) in (4.118) we obtain:

$$\left| \begin{array}{l} \dot{x} = (x + a)(y(\eta) - y(\eta + h)), \\ \dot{y} = (y + b)(x(\eta - h) - x(\eta)), \end{array} \right. \tag{4.157}$$

where dot denotes differentiation with respect to η. Notice that η is a coordinate moving along the array with a velocity equal to $c = 1/h$. Let us assume that h is sufficiently small (i.e. c is sufficiently large). Then the two difference terms $y(\eta) - y(\eta + h)$ and $x(\eta - h) - x(\eta)$ can be replaced approximatelly by the first derivatives $-\dot{y}$ and $\dot{x}$. Hence, from (4.157) we obtain:

$$\left| \begin{array}{l} \dot{x} = (x + a)(-\dot{y}) \\ \dot{y} = (y + b)(\dot{x}). \end{array} \right. \tag{4.158}$$

Then the solitary waves of the CNN model (4.134) correspond to nonconstant solutions of (4.158) which satisfy the condition:

$$lim_{|\eta| \to \infty}(x(\eta), y(\eta)) = 0. \tag{4.159}$$

Solving the system (4.158) we obtain the following relation between x and y.

$$(x + a)(y + b) = -1. \tag{4.160}$$

From (4.160) we get that $x = 0$ and $y = 0$ when $ab = -1$, and $a \neq 0$, $b \neq 0$. In this way we have proved the following theorem:

Theorem 4.9 *For the CNN model of Toda lattice equation (4.134) with piece-wise linear characteristics (1.14), which satisfies $ab = -1$ and $a \neq 0$, $b \neq 0$, there exists a solitary wave solution (4.156) with a velocity $c = 1/h$, such that*

$$lim_{|\eta| \to \infty}(x(\eta), y(\eta)) = 0.$$

Remark 4.7 Condition (4.159) is satisfied by the homoclinic orbits of the system (4.157).

Remark 4.8 If we compare the travelling wave solution (4.156) with the predicted periodic solutions (4.158), (4.159), we can see that they are similar $x(t-kh) \to X_{m_0} sin(\omega_0 t + k\Omega_0)$, $y(t-kh) \to Y_{m_0} sin(\omega_0 t + k\Omega_0)$. Therefore, we are able to make a conclusion that our CNN model (4.134) of Toda lattice equation has a solitary wave solution with period of the wave of approximatelly $T_0 = \frac{2\pi}{\omega_0}$ and with amplitude of the wave X_{m_0}.

Remark 4.9 Classical Toda equation is of the type [147]:

$$m\ddot{r_n} = 2f(r_n) - f(r_{n+1}) - f(r_{n-1}). \tag{4.161}$$

Toda has solved it in the case when:

$$f(r) = -\alpha(1 - e^{-\beta r}). \tag{4.162}$$

Let us introduce the substitution $\dot{s}_n = f(r_n)$ in (4.161). Hence, we get:

$$\left| \begin{array}{l} \dot{s}_n = f(r_n) \\ m\dot{r}_n = 2s_n - s_{n+1} - s_{n-1}. \end{array} \right. \tag{4.163}$$

From (4.162) and (4.163) we obtain only one equation:

$$\frac{m}{\beta}\frac{\ddot{s}_n}{\alpha + \dot{s}_n} = s_{n+1} + s_{n-1} - 2s_n. \tag{4.164}$$

We are looking for travelling wave solution of (4.164):

$$s_n = S(\Theta), \Theta = \omega t - kq. \tag{4.165}$$

Therefore, $S(\Theta)$ should satisfy the following ODE:

$$\frac{m\omega^2}{\beta}\frac{S''}{\alpha + \omega S'} = S(\Theta + k) + S(\Theta - k) - 2S(\Theta). \tag{4.166}$$

Toda has solved this equation and the solution has the following form:

$$s_n \sim \frac{m\Omega}{\beta} th(\Omega t - kq), 2K\omega_{K\to\infty} \to \Omega. \tag{4.167}$$

This solution is a solitary wave solution of the Toda lattice equation (4.161).

4.7 Lotka-Volterra equation and its CNN model

One of the classical equations from theoretical biology is Lotka-Volterra equation, also called prey-predator equation [74]:

$$\frac{dx_k}{dt} = x_k(x_{k-1} - x_{k+1}), 1 \leq k \leq p. \tag{4.168}$$

Let us group the above equations with odd or even indexes in (4.168) separately. Thus, we obtain the following two systems of coupled equations:

$$\begin{aligned} \frac{dX_{2k-1}}{dt} &= X_{2k-1}(X_{2k-2} - X_{2k}), \\ \frac{dX_{2k}}{dt} &= X_{2k}(X_{2k-1} - X_{2k+1}), 1 \leq k \leq p. \end{aligned} \tag{4.169}$$

We have an interpretation of (4.169): X_{2k-1} is the population of preys as a function of the discrete distance $2k-1$, X_{2k} is the population of predators as a function of the discrete distance $2k$.

The equilibrium points of (4.169) are:

$$\left| \begin{array}{l} X_{2k-2} = X_{2k} \equiv D_1, \\ X_{2k-1} = X_{2k+1} \equiv D_2, \end{array} \right. \tag{4.170}$$

D_1, D_2-arbitrary values.

Let us make change of variables:

$$\left| \begin{array}{l} X_{2k} \cong v_{C_k} + D_1, \\ X_{2k-1} \cong i_{L_k} + D_2. \end{array} \right. \tag{4.171}$$

Substituting (4.171) in (4.169) we get:

$$\left| \begin{array}{l} \frac{dv_{C_k}}{dt} = (v_{C_k} + D_1)(i_{L_k} - i_{L_{k+1}}), \\ \frac{di_{L_k}}{dt} = (i_{L_k} + D_2)(v_{C_{k-1}} - v_{C_k}), \end{array} \right. \tag{4.172}$$

$$1 \leq k \leq p = M.M.$$

We can easily see that (4.172) is identical to (4.142) which is the CNN model of Toda lattice equation (4.134). The interpretation of (4.172) is the following: v_{C_k} - capacitor voltage presents the variations in the population of an "even-numbered" species (preys)

about some equilibrium population equal to D_1; i_{L_k} - inductor current presents the variations of an "odd-numbered" species (predators) about some equilibrium population equal to D_2. Therefore, the Lotka-Volterra equation (4.168) can be transformed in the Toda lattice equation (4.134). Hence, the Lotka-Volterra equation can also be studied as an autonomous CNN. This example demonstrates the value of the CNN paradigm as a unifying framework for studying nonlinear differential equations.

5 Appendix A. Topological degree method

In this appendix we shall define the degree of a map in $\mathbf{R}^n$ and derive some useful properties [34,81,93].

First of all we shall give some preliminary notations:

1. We denote $x = [x_1, x_2, \ldots, x_n]^T$, where T means the transposition.

2. Let $x \in \mathbf{R}^n$. By $\bar{x}$ we mean the vector $[|x_1|, |x_2|, \ldots, |x_n|]^T$. Define $\mathbf{D}_x \triangleq diag(sgnx_k)$ where $sgnx_k = 1$ if $x_k \geq 0$, and $sgnx_k = -1$ if $x_k < 0$, then $x = \mathbf{D}_x \bar{x}$.

3. Let $A \in bfR^{n \times m}$, i.e., an $n \times m$ real matrix.

4. We denote $||x|| \triangleq max\{|x_i|\}$, and $||x||_2 \triangleq (\sum_i |x_i|^2)^{\frac{1}{2}}$. A sphere $S(0,r)$ and a ball $B(0,r)$ centered at 0 with radius r are defined as $S(0,r) \triangleq \{x \in \mathbf{R}^n : ||x|| = r\}$ and $B(0,r) \triangleq \{x \in \mathbf{R}^n : ||x|| < r\}$.

Let D be a bounded, open subset of $\mathbf{R}^n$. Let $C(\bar{D})$ be the space of all continuous functions defined on $\bar{D}$ into $\mathbf{R}^n$ with the topology of uniform convergence. Thus, $C(\bar{D})$ is a normed linear space with a norm defined by $|f| = sup_{x \in \bar{D}}\{||f(x)||\}$ for all $f \in C(\bar{D})$. By $C^1(\bar{D})$ we mean the subset of $C(\bar{D})$ consisting of all functions in $C(\bar{D})$ which are continuously differentiable.

Definition 5.1 *Let $q \in \mathbf{R}^n$, and $f \in C(\bar{D})$. Assume that $f(x) = q$ has no solutions in ∂D. The degree of f relative to q and D, denoted by $d(f; q, D)$, is defined by the following algorithm:*

A). Assume $f \in C^1(\bar{D})$and that the Jacobian matrix $J_f(x) \triangleq \partial f(x)/\partial x$ is nonsingular at each $x \in \mathcal{L} \triangleq \{z \in D : f(x) = q\}$, the degree of f relative to q and D is defined as the algebraic number of solutions of $f(x) = q$ in D, that is

$$d(f; q, D) = \sum_{x \in \mathcal{L}} sgndetJ_f(x)$$

B). Assume $f \in C^1(\bar{D})$ and that $J_f(x)$ is singular at some $x \in \mathcal{L}$. It follows from Sard's theorem that there exists a sequence $\{q_m\} \subset \mathbf{R}^n$, $q_m \to q$ as $m \to \infty$ such that each solution set $\mathcal{L}_m = \{x \in D : f(x) = q_m\}$ contains only x's at which $J_f(x)$ is nonsingular. Define

$$d(f; q, D) = lim_{m\to\infty} d(f; q_m, D)$$

C). Assume that $f \in C(\bar{D})$ but $f \notin C^1(\bar{D})$. In this case, since $C^1(\bar{D})$ is dense in $C(\bar{D})$, there exists a sequence $\{f_m\} \subset C^1(\bar{D})$, $f_m \to f$ as $m \to \infty$ uniformly on D. Define

$$d(f; q, D) = lim_{m\to\infty} d(f_m, q, D)$$

Remark 5.1 Since $J_f(x)$ is nonsingular at any $x \in \mathcal{L}$ and $\bar{D}$ is compact, $\mathcal{L}$ is a finite set. Hence $d(f; q, D)$ is a finite integer.

Remark 5.2 There is a volume integral representation of $d(f; q, D)$; namely,

$$d(f; q, D) = \int_D \psi_\varepsilon(||f(x) - q||) det J_f(x) dx$$

where $\varepsilon > 0$ is small number and $\psi_\varepsilon : \mathbf{R}_+ \to \mathbf{R}$ is a continuous bump function satisfying:

i). $\psi_\varepsilon(s) = 0$ for all $s \geq \varepsilon$, and

ii). $\int_{\mathbf{R}^n} \psi_\varepsilon(||y||) dy = 1$.

Proof: Let $\mathcal{L} = \{z_1, z_2, \ldots, z_k\}$. Since $J_f(x_i)$ is nonsingular for all $i = 1, 2, \ldots, k$, there exists an $\varepsilon > 0$ such that f is a homeomorphism for each ball $B(x_i, \varepsilon_i) \subset D$ centered at x_i with radius ε_i onto $B(q, \varepsilon)$. Then we obtain

$$\int_D \psi_\varepsilon(||f(x)-q||) det J_f(x) dx = \sum_{i=1}^{k} \int_{B(x_i,\varepsilon_i)} \psi_\varepsilon(||f(x)-q||) det J_f(x) dx$$

Let $y(x) = f(x) - q$, then $J_f(x) = \partial y/\partial x$. Rewriting $det J_f(x) = |det J_f(x)| sgndet(J_f(x))$ and applying the standard change of variables for volume integral, the above integral becomes

$$\sum_{i=1}^{k} \int_{B(x_i,\varepsilon_i)} \psi_\varepsilon(||y(x)||) det J_f(x) sgndet(J_f(x_i)) dx$$

$$= \sum_{i=1}^{k} [\int_{B(0,\varepsilon)} \psi_\varepsilon(||y||)dy] sgn(detJ_f(x_i)) = \sum_{i=1}^{k} sgndetJ_f(x_i)$$

$$= d(f; q, D)$$

where the last equation follows from conditions i). and ii); namely

$$\int_{B(0,\varepsilon)} \psi_\varepsilon(||y||)dy = \int_{\mathbf{R}^n} \psi_\varepsilon(||y||)dy = 1$$

Remark 5.3 The degree $d(f; q, D)$ is a continuous function of both f and q. This is an immediate consequence of the integral representation stated above.

Remark 5.4 Since $d(f; q_m, D)$ is continuous in q_m and integer-valued, the above limit is reached after finitely many steps and is independent of any particular choice of the sequence $\{q_m\}$.

Remark 5.5 Since $d(f_m, q, D)$ is continuous in f_m and integer-valued, the above limit is reached after finitely many steps and is independent of any particular choice of the sequence $\{f_m\}$.

Now derive a few important properties of the degree $d(f; q, D)$.

Proposition 5.1 Continuity property. *The degree $d(f; q, D)$ of f relative to q and D is a continuous function of both q and f.*

Proof: We have already established this property.

Proposition 5.2 Homotopy invariance. *A homotopy $h(x, \lambda)$ over $\bar{D}$ is any continuous function from $\bar{D} \times [0, 1] \to \mathbf{R}^n$. Let $h(x, \lambda)$ be a homotopy over $\bar{D}$. If $h(x, \lambda) = q$ has no solution in ∂D for any $\lambda \in [0, 1]$, then $d(h(x, \lambda); q, D)$ is a constant independent of λ.*

Proof: Since the function $\hat{d}(\lambda) \triangleq d(h(x, \lambda); q, D)$ is well-defined on $[0, 1]$ by assumption and is continuous in λ, it follows from Property 1 that $\hat{d}(\lambda)$ is integer- valued and hence must be a constant independent of λ.

Remark 5.6 In this case, $h(x, 0)$ and $h(x, 1)$ are said to be homotopic to each other, and we say that $h(x, \lambda)$ connects $h(x, 0)$ and $h(x, 1)$ homotopically.

Proposition 5.3 Boundary value dependence. *The degree $d(f;q,D)$ is uniquely determined by the action of f on the boundary ∂D.*

Proof: Let f and $\tilde{f}$ be two functions from $\bar{D} \to \mathbf{R}^n$ such that $f(x) = \tilde{f}(x)$ for all $x \in \partial D$. Define $h(x,\lambda) = \lambda f(x) + (1-\lambda)\tilde{f}(x)$. Since $h(x,\lambda) = f(\lambda) = \tilde{f}(\lambda)$ for all $x \in \partial D$, $h(x,\lambda) = q$ has no solution in ∂D. It follows from Property 2 that $d(f;q,D) = d(\tilde{f};q,D)$.

Since $f(x) = q$ if, and only if, $f(x) - q = 0$, there is no loss of generality to consider only $d(f;0,D)$. We then consider f as a vector field defined on $\bar{D}$ and any $x \in D$ such that $f(x) = 0$ is called a singular point of f. Property 2 can then be restated as follows:
Property 5.2$'$. *Suppose the homotopy $h(x,\lambda) \neq 0$ for all $x \in \partial D$ and for all $\lambda \in [0,1]$, then $d(h(x,\lambda);0,D)$ is a constant independent of λ.*
As an application of Property 5.2$'$, we have:

Proposition 5.4 *Let f and $\tilde{f} : \bar{D} \to \mathbf{R}^n$ be continuous functions such that f and $\tilde{f}$ never vanish on ∂D. If f and $\tilde{f}$ are never opposite to each other on ∂D, i.e.*

$$\frac{f(x)}{||f(x)||} \neq \frac{-\tilde{f}(x)}{||\tilde{f}(x)||}$$

for all $x \in \partial D$, then $d(f;0,D) = d(\tilde{f};0,D)$.

Proof: Define the homotopy $h(x,\lambda) = \lambda f(x) + (1-\lambda)\tilde{f}(x)$. By assumption, $h(x,\lambda) \neq 0$ on ∂D for all $\lambda \in [0,1]$. It follows from Property 2$'$ that $d(f;0,D) = d(\tilde{f};0,D)$.

Proposition 5.5 *Let $f \in C(\bar{D})$, where $f = f' + f''$. The component f' is called a principal part of f if $||f'(x)|| > ||f''(x)||$ for all $x \in \partial D$. Let f' be a principal part of f, then*

$$d(f;0,D) = d(f';0,D)$$

Proof: Suppose $f(x) = -\alpha f'(x)$ for some $\alpha > 0$ and $x \in \partial D$, then $(1+\alpha)f'(x) = -f''(x)$ and we obtain $||f'(x)|| < ||f''(x)||$, a contradiciton. Hence, f and f' are never opposite to each other on ∂D. It follows from Property 4 that $d(f;0,D) = d(f';0,D)$.

Proposition 5.6 *Let $f \in C(\bar{D})$. Let $c \in \mathbf{R}^n$ be a constant unit vector. We say that the field f omits the direction c if*

$$\frac{f(x)}{||f(x)||} \neq c$$

for all $x \in \partial D$. If f omits any given direction c, $d(f; 0, D) = 0$.

Proof: Define $h(x, \lambda) = \lambda f(x) + (1-\lambda)\tilde{f}(x)$, $\lambda \in [0, 1]$ where $\tilde{f}(x) = c$ for all $x \in \bar{D}$. Since f omits the direction c, $h(x, \lambda) \neq 0$ for all $x \in \partial D$ and $\lambda \in [0, 1]$. Since the degree of a constant map is always zero, it follows from Property $2'$ that $d(f; 0, D) = d(\tilde{f}; 0, D) = 0$.

Proposition 5.7 *Let $f \in C(\bar{D})$ where D is symmetric about the origin. If $f(x) = -f(-x)$ for all x in D, f is called an odd field. If f is an odd field on D, then $d(f; 0, D) =$ an odd integer.*

Proof: For simplicity, assume the Jacobian matrix $J_f(x)$ is non-singular at each $x \in \mathcal{L} \triangleq \{x \in D; f(x) = 0\}$. The solutions of $f(x) = 0$ can be grouped in pairs $(x_i, -x_i)$; $i = 1, 2, \ldots, k$ together with $x_0 = 0$. Since f is an odd field, $detJ_f(x_i) = detJ_f(-x_i)$. Hence

$$d(f; 0, D) = \sum_{i=1}^{k} [sgn\ detJ_f(x_i) + sgn\ detJ_f(-x_i)] + sgn\ detJ_f(x_0)$$

$$= \text{an even integer } \pm 1 = \text{an odd integer.}$$

As an important application of Property 5.7, we have:

Proposition 5.8 *Let $f \in C(\bar{D})$ where D is symmetric about the origin. If*

$$\frac{f(x)}{||f(x)||} \neq \frac{f(-x)}{||f(-x)||}$$

for all $x \in \partial D$, i.e., $f(x)$ and $f(-x)$ are both nonzero and do not point in the same direction, then $d(f; 0, D) =$ an odd integer.

Proof: Define $h(x, \lambda) = \lambda[f(x) - f(-x)] + (1 - \lambda)f(x) = f(x) - \lambda f(-x)$; $\lambda \in [0, 1]$. By assumption, $h(x, \lambda) \neq 0$ for all $x \in \partial D$ and $\lambda \in [0, 1]$. By homotopy invariance, $d(f; 0, D) = d(h(., 1); 0, D)$. But $h(x, \lambda) = f(x) - f(-x)$ implies $h(., 1)$ is an odd field, hence according to Property 7, $d(f; 0, D) =$ an odd integer.

Remark 5.7 If $d(f;0,D) =$ an odd integer, then $f(x) = 0$ has at least one solution in D. This fact is applied extensively to network problems.

Proposition 5.9 *Let $f \in C(\bar{D})$. If $d(f;0,D) \neq 1$, then*

i). there exists at least one $x \in \partial D$ such that $f(x)$ and x are in the same direction, and

ii). there exists at least one $x' \in \partial D$ such that $f(x')$ and x' are in the opposite directions.

Proof: Observe that if either i). or ii). is violated, f will be homotopic to the identity map on D and hence $d(f;0,D) = 1$, a contradiction.

Proposition 5.10 *(A special case of Hopf theorem.) Let f and $\tilde{f}$ be two vector fields on $D = B(0,r) \triangleq \{x \in \mathbf{R}^n : ||x|| < r\}$ such that $d(f;0,D) = d(\tilde{f};0,D)$. Then f and $\tilde{f}$ are homotopic over D.*

Proof: For detailed proof see [34].

Definition 5.2 *Let $f \in C(\bar{D})$. Let x be a singular point of f in D, i.e. $f(x) = 0$. The singular point x is said to be isolated if there exists a neibourhood $B \subset D$ of x such that x is the only singular point of f in B. The quantity $d(f;0,B)$ is called the index of x.*

A singular point x of f in D is said to be strucurally stable if for any $\varepsilon > 0$, there is a $\delta > 0$ such that there exists at least one singular point in the ball $B(x,\varepsilon)$ for any $f_\delta \in C(\bar{D})$ such that $||f_\delta - f|| < \delta$.

Proposition 5.11 *Let f be a vector field on $\mathbf{R}^n$ with finitely many zeros, and suppose that the sum of the indices of its zeros is 0. Let $B(0,r)$ be a ball containing all $f^{-1}(0)$. Then there exists a continuous vector field $\hat{f}$ that has no zeros, yet equal to f on $\mathbf{R}^n \setminus B(0,r)$.*

Proof: We define $\hat{f}$ in $B(0,r)$ by extending f on $\partial B(0,r)$ continuously into $B(0,r)$ in such a way that $\hat{f}(x) \neq 0$ for all $x \in B(0,r)$. For the detailed outline of the proof, see [34].

Remark 5.8 Using a similar method, it is easy shown that if 0 is a singular point of f with index equal to 0, then we can always find an $\hat{f}$ such that $\hat{f}(x) = f(x)$ for all $x \in \mathbf{R}^n \setminus B(0,r)$ and $\hat{f}(x) \neq 0$ for all $x \in B(0,r)$ where $B(0,r)$ is a ball in which 0 is the only singular point of f.

Proposition 5.12 *An isolated singular point is structurally stable if, and only if, its index is different from zero.*

Proof: (If) This a direct consequence of the continuity property of $d(f;0,D)$ in f.

(Only if) Let 0 be an isolated singular point of f such that $d(f;0,B(0,r)) = 0$ where $B(0,r)$ is an open ball in which 0 is the only singular point. Since $d(f;0,B(0,r)) = 0$, we can always find an $\hat{f}$ such that $\hat{f}(x) = f(x)$ for all $x \in \mathbf{R}^n \setminus B(0,r)$ and $\hat{f}(x) \neq 0$ for all $x \in B(0,r)$. Since f is continuous and $r > 0$ can be chosen arbitrarily small, for any $\delta > 0$, there is an f_δ, such that $||f(x) - f_\delta|| < \delta$ for all $x \in \mathbf{R}^n$ but $f_\delta(x) \neq 0$ for all $x \in B(0,r(\delta))$ where $r(\delta) > 0$ depends on δ. Hence 0 is not structurally stable.

A structurally stable singular point varies continuously with f. In view of Property 5.12 we define:

Definition 5.3 *Let f be a continuous vector field on $\mathbf{R}^n$. A point $x \in \mathbf{R}^n$ is said to be a structurally stable solution of $f(x) = 0$ if, and only if, the index of x is nonzero.*

6 Appendix B. Hysteresis and its models

6.1 Hysteresis Phenomena

Hysteresis if defined in the literature as a rate independent memory effect. We shall start with an informal description of hysteresis. Consider a system whose state is characterized by two scalar variables u and v and we shall assume that they depend continuously on time t. They will play the role of independent and dependent variables, respectively. In the terminology of CNN, they are also named input and output, or also control and state, respectively.

Let us consider Fig.21 and assume the following rules. If u increases from u_1 to u_2, then the couple (u, v) moves along the curve ABC; if u decreases from u_2 to u_1, then (u, v) moves along the path CDA. Moreover, if u inverts its movement when $u_1 < u(t) < u_2$, then (u, v) moves into the interior of the region S bounded by the major loop $ABCDA$; this behaviour must be described by the specific model.

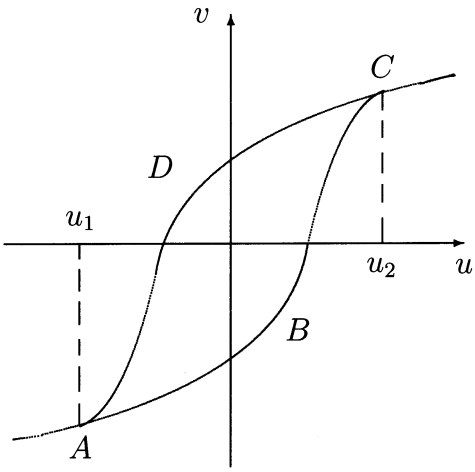

Fig. 21. Hysteresis phenomena.

In standard examples the couple (u, v) can attain any interior point of S, by a suitable choice of the input function $u(t)$. In any case we shall assume that the evolution of v is uniquely determined by that of u. Note that whenever $u_1 < u(t) < u_2$, $v(t)$ is not determined by the value of $u(t)$ at the same instant; indeed $v(t)$ depends on the previous evolution of u (memory effect), and possibly also on the initial state of the system.

We require that the path of the couple $(u(t), v(t))$ be invariant with respect to any increasing homeomorphism. This means that at any t, $v(t)$ depends just on the range of the restriction $u : [0, t] \to \mathbf{R}$ and on the order in which values have been attained. So there is no dependence on the derivatives of u, which may even fail to exist. Note that this condition is essential for giving a graphic representation of hysteresis in the (u, v)-plane, like in Fig. 22: if it did not hold, the path of the couple (u, v) would depend on its velocity. In [153] this property is named **rate independence**. Therefore we shall use the following definition [153]:

Definition 6.1 *Hysteresis = Rate Independence Memory Effect.*

Actually, even in most typical hysteresis phenomena, like ferromagnetism, ferroelectricity, plasticity, memory effects are not purely rate independent, since hysteresis is coupled with viscous-type effects. However, in several cases the rate independent component prevails, provided that evolution is not too fast.

Several physical phenomena exhibit hystersis. In classical continuum mechanics, hysteresis behaviour is inherent in many constitutive laws. In systems and control applications, hysteresis regularly appears via mechanical play and friction, or in the form of a relay or thermostat, often deliberately built into the system. If the hysteretic behaviour is described using a hysteresis operator, then the mathematical model for the dynamical system consists of differential equations coupled with one or several hysteresis operaotrs, which is complemented by initial and boundary conditions. The oscillator with hystresis restoring force,

$$x''(t) + \mathcal{F}[x](t) = f(t),$$

$\mathcal{F}$ being a hysteresis operator is a basic example.

The coupling of rate independent hysteretic nonlinearities with ordinary differential equations leads to interesting mathematical problems in the theory of nonlinear oscillations. Hysteretic constitutive laws in continuum mechanics formulated in terms of hysteresis operators lead in a natural way to partial differential equations coupled with hysteresis operators, where the former represent the balance laws for mass, momentum and internal energy.

There are two types of hysteresis relations: 1).**relay** hysteresis, and 2). **active** hysteresis. In relay hysteresis, the graph (u, v) with output $v(t) = \mathcal{F}[u](t)$ moves, for a given continuous piecewise monotone input $u(t0$, on one of two fixed output curves $h_U(u)$, $h_L(u)$ defined, respectively, on $[\alpha, \infty)$, $[-\infty, \beta]$, $\alpha < \beta$ (see Fig. 22), depending on which threshold, α or β, was last attained. It is known [86] for $h_U(h_L)$ to be asymptotically constant because of saturation as $u \to +\infty(-\infty)$, and h_U, h_L need not meet. In relay hysteresis the memory-based relation can be presented by the formula:

$$\mathcal{F}[u](t) = \begin{cases} h_L(u(t)), & \text{if } u(t) \leq \alpha; \\ h_U(u(t)), & \text{if } u(t) \geq \beta; \\ h_L(u(t)), & \text{if } u(t) \in (\alpha, \beta) \quad \text{and } u(\tau(t)) = \alpha; \\ h_U(u(t)), & \text{if } u(t) \in (\alpha, \beta) \quad \text{and } u(\tau(t) = \beta; \end{cases} \tag{6.1}$$

where $\tau(t) = sup\{s | s \leq t, u(s) = \alpha \text{ or } u(s) = \beta\}$. Note that $\tau(t)$ is defined for any continuous input $u(.)$, therefore the domain of $\mathcal{F}$ can be taken as $C[0, \infty)$.

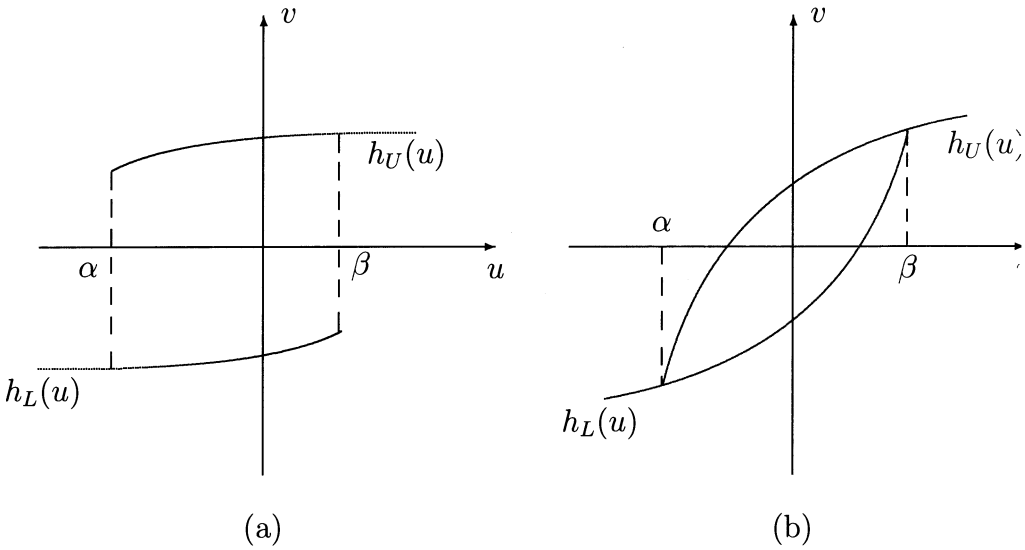

Fig. 22. Relay hystersis.

Active hysteresis allows trajectories inside the hysteresis region

$$\mathcal{H} = \{(u, v) | \alpha < u < \beta, h_L(u) < v < h_U(u)\}.$$

If the piecewise monotone input $u(t)$ increases to γ, then decreases, the graph (u, v) after $u(t) = \gamma$ moves on a responce curve inside $\mathcal{H}$ (Fig.23). If the input continues to decrease to δ, then increases, the graph moves on another interior path. The mathematical models for this type of hysteresis require the existence of at least two fixed families of curves filling $\mathcal{H}$, one family for increasing $u(.)$, one family for decreasing $u(.)$. In all of the above descriptions of basic hysteresis, the relation of response to input is rate-independent, i.e. the velocity with which the input moves on the u-axis is only reflected in the velocity of the output on the v-axis. The qualitative nature of the response does not change.

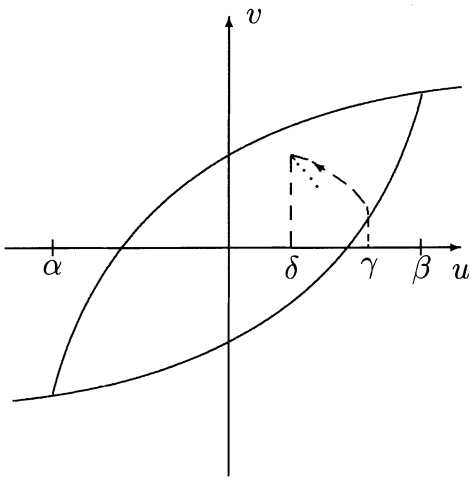

Fig. 23. Active hysteresis.

The mathematical models for the two types of hysteresis defined above are quite different, even though their memory-based behaviour is similar. Both types have been described for $u(t)$ continuous piecewise monotone, but active hysteresis is easily extended to continuous inputs by using approximations and a limit process [86]. Relay hysteresis $\mathcal{F} : u \to \mathcal{F}[u]$ is inherently discontinuous as a map between function spaces, since an input function that just reaches a threshold and reverses just short of the threshold by an arbitrary small amount.

6.1.1 Hysteresis operators

We shall provide a functional framework for hysteresis relations and we shall introduce the concept of hysteresis operator.

Definition 6.2 *Hysteresis is characterized by two features:*
i). Memory - at any t, $v(t)$ may depend only on $u(t)$ but also on the previous evolution of u;
ii). Rate independence - the output is invariant with respect to changes of the time scale.

When only property i). is fulfilled, we shall speak of a memory operator.

We already indicated how the output v is constructed for a continuous and piecewise monotone input function u defined in the interval $[0, T]$. The continuity requirement is natural, whereas piecewise monotonicity is too restrictive. Here we shall show how these operators can be extended to $C^0([0, T])$. At any t, the output $v(t)$ will depend not only on $u_{[0,t]}$, but also on the initial state of the system. Hence the initial value $v(0)$, or some equivalent information; the information on $u(0)$ is clearly in $u_{[0,t]}$. So we have the folowing definition for the hysteresis operator $\mathcal{F}$:

$$\mathcal{F} : Dom(\mathcal{F}) \subset C^0([0, T]) \times \mathbf{R} \to C^0([0, T]). \tag{6.2}$$

Usually the initial state $(u(0), v(0))$ is confined to a hysteresis region $\mathcal{L}$. Then we have two possibilities: 1). the input argument $(u(0), v^0) \in \mathcal{L}$ and then $[\mathcal{F}(u, v^0)](0) = v^0$; 2). no restriciton is imposed on $(u(0), v^0)$ and then the initial condition is not in the same form. In the last case, the actual initial value $[\mathcal{F}(u, v^0)](0) = v^0$ onto the interval $(\{u(0)\} \times \mathbf{R}) \cap \mathcal{L}$.

Let us now define the following properties [153] for the hysteresis operator $\mathcal{F}$ defined above:
Causality property:

$$\begin{cases} \forall (u_1, v^0), (u_2, v^0) \in Dom(\mathcal{F}), \forall t \in]0, T], \\ \text{if } u_1 = u_2 \in [0, T], \text{ then } [\mathcal{F}(u_1, v^0)](t) = [\mathcal{F}(u_2, v^0)](t), \end{cases} \tag{6.3}$$

Rate independence property:

$$\begin{cases} \forall (u, v^0) \in Dom(\mathcal{F}), \forall t \in]0, T], \\ \text{if } s : [0, T] \to [0, T] \text{ is an increasing homeomorphism,} \\ \text{then } [\mathcal{F}(u \circ s, v^0)](t) = [\mathcal{F}(u, v^0)](s(t)). \end{cases} \tag{6.4}$$

Semigroup property:

$$\begin{cases} \forall (u, v^0) \in Dom(\mathcal{F}), \forall [t_1, t_2] \subset]0, T], \\ \text{setting } v(t_1) = [\mathcal{F}(u, v^0)](t_1), \text{ then} \\ [\mathcal{F}(u, v^0)](t_2) = [\mathcal{F}(u(t_1 + ...), v(t_1))](t_2 - t_1). \end{cases} \tag{6.5}$$

Let consider the case when the state is not completely characterized by the couple $(u, v) \in \mathbf{R}^2$. Assume that the state is described by the value of some variable ξ, belonging to a metric space X. Thus we have $v(t) = [\mathcal{F}(u, \xi^0)](t)$, where $\xi^0 \in X$ contains all the information about the initial state. The semigroup property in this case can not be written in the form (6.5), and $\mathcal{F}$ may act as follows. First, the value of the state variable $\xi(t)$ is evaluated, in dependence of the inputs $u|_{[0,t]}$ and ξ^0, then $\xi(t)$ is transformed into the output value $v(t)$:

$$\begin{cases} v(t) = [\mathcal{F}(u, \xi^0)](t) \text{ is equivalent to} \\ \xi(t) = [\Phi(u, \xi^0)](t) \text{ and } v(t) = \mathcal{T}(\xi(t)). \end{cases} \tag{6.6}$$

The state operator Φ is hysteresis operator $C^0([0, T]) \times X \to X$, and $\mathcal{T} : X \to \mathbf{R}$ is a state-output transform (without memory). Thus,

$$\mathcal{F} : Dom(\mathcal{F}) \subset C^0([0, T]) \times X \to C^0([0, T]);$$

and we can assume that $\mathcal{F}$ fulfills the following modified semigroup property:

$$\begin{cases} \forall (u, \xi^0) \in Dom(\mathcal{F}), \forall [t_1, t_2] \subset]0, T], \\ \text{setting } \xi(t_1) = [\Phi(u, \xi^0)](t_1), \text{then} \\ [\mathcal{F}(u, \xi^0)](t_2) = [\mathcal{F}(u(t_1 + ...), \xi(t_1))](t_2 - t_1). \end{cases} \tag{6.7}$$

Monotonicity properties:

Let us consider a continuous hysteresis operator (6.2). The standard L^2- monotonicity is defined as follows:

$$\begin{cases} \exists u_1, u_2 \in C^0([0,T]), \exists v^0 \in \mathbf{R} : \text{setting } v_i := \mathcal{F}(u_i, v^0), \\ \int_0^T (v_1 - v_2)(u_1 - u_2) dt < 0. \end{cases} \tag{6.8}$$

Next we shall define a piecewise monotonicity:

$$\begin{cases} \forall (u, v^0) \in Dom(\mathcal{F}), \forall [t_1, t_2] \subset [0,T], \\ \text{if } u \text{ is either nondecreasing or nonincreasing in } [t_1, t_2], \\ \text{then so is } \mathcal{F}(u, v^0); \end{cases} \tag{6.9}$$

that is

$$\begin{cases} \text{if } u, \mathcal{F}(u, v^0) \in W^{1,1}(0,T), \\ \text{then } \frac{du}{dt} \frac{d}{dt} \mathcal{F}(u, v^0) \geq 0, \end{cases} \tag{6.10}$$

This property is natural for rate independent operators, but there exist rate dependent operators which are continuous in $C^0([0,T])$ and fulfil (6.9).

6.1.2 Mathematical models of hysteresis operators

I.Duhem hysteresis operator

The Duhem model for active hysteresis focusses on the fact that the output can only change its character when the input changes direction. This model uses an integral operator or differential equation to model the relation [43]

$$\dot{v}(t) = f_1(v, u)\dot{u}_+(t) + f_2(v, u)\dot{u}_-(t)$$

with $\dot{u}_+(t) = max[0, \dot{u}(t)]$, $\dot{u}_-(t) = min[0, u(t)]$ to generate the curves of Fig. 24.

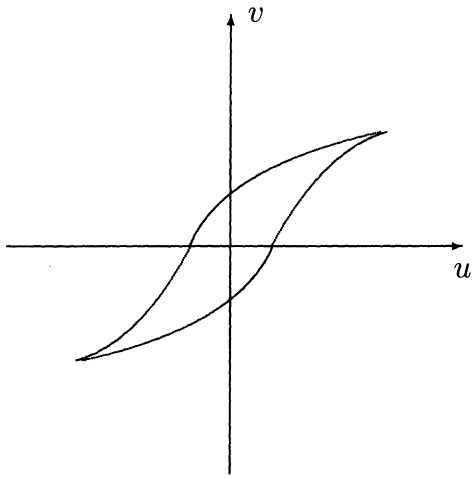

Fig.24. Duhem hysteresis operator.

In [32,33] an integral operator is considered of which a particular case is the equation

$$\frac{dv}{dt} + a|\frac{du}{dt}|g(u,v) = b\frac{du}{dt}.$$

A typical choice for g is $g(u,v) = v - b\varphi(u)$, with φ chosen so that $v(.)$ forms a classical hysteresis loop when $u(.)$ is a sinusoid.

In [85] for the Duhem model, the output is defined for piecewise monotone inputs in the following form:

$$v = \mathcal{F}[u] : \frac{dv}{dt} = \Phi(v, u, \dot{u}). \tag{6.11}$$

Most often, Φ is assumed to have the form

$$\Phi(v, u, \dot{u}) = \begin{cases} f_D(v,u)\dot{u}, & \dot{u}(t) \leq 0; \\ f_I(v,u)\dot{u}, & \dot{u}(t) \geq 0, \end{cases}$$

with f_D, f_I continuous, D means decreasing input, I means increasing input. The solutions of (6.11) give the trajectories interior to the hysteresis region $\mathcal{H}$. To include C^1 boundary curves h_U and h_L, we can modify (6.11) by adding the constraints

$$v'(t) = h_U'(u(t))u'(t) \text{ for } v(t) \geq h_U(u(t)),$$
$$v'(t) = h_L'(u(t))u'(t) \text{ for } v(t) \leq h_L(u(t)).$$

This adds the physically irrelevant trajectories

$$v(t) = h_L(u(t)) + c, \ v(t) = h_U(u(t)) + c$$

for initial states outside $\mathcal{H}$ and off the curves h_U, h_L.

II.Ishlinskii hysteresis operator.

It is proposed as a model for plasticity-elasticity [82] and it is active hysteresis map whose behavior is given in Fig.25, called **stop**.

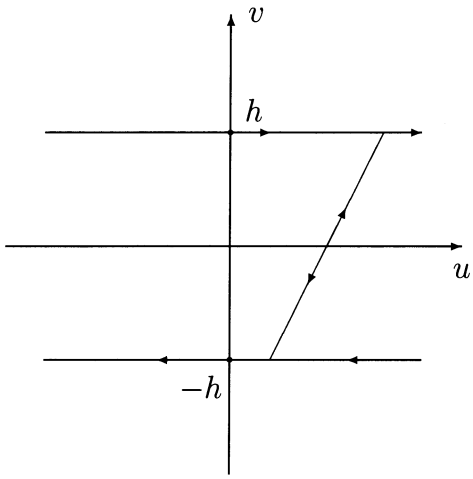

Fig. 25. Ishlinskii hysteresis operator.

For this hysteresis the bounding curves are $v = \pm h$, the hysteresis region $\mathcal{H}$ is the strip

$$\{(u, v) | -\infty < u < \infty, -h < v < h\},$$

and the corresponding operator $S_h : u \to v$ for u continuous monotone, initial state $(u_0, v_0) \in \mathcal{H}$, according to the following rules:

i). if $u(.)$ is moving to the right at time T, then $S_h[u](t) = min\{h, u(t) - u_0 + v_0\}$;

ii). if $u(.)$ is moving left at time t, then $S_h[u](t) = max\{-h, u(t) - u_0 + v_0\}$.

The operator S_h can be defined for piecewise monotone inputs with its single interior family of two-way curves. We can describe this extension analytically by asking that the semigroup property hold:

$$S_h(t_0, v_0)[u](t) = S_h(t_1, S_h(t_0, v_0)[u](t_1))[u](t).$$

The simplest form of Ishlinskii hysteresis operator can then be defined as the superposition

$$v(t) = \mathcal{F}[u](t) \equiv \int_0^\infty \xi(h) S_h(t_0, v_0(h))[u](t) dh.$$

Although defined for piecewise monotone $u(.)$, under reasonable conditions on $\xi(.)$ ($\xi(h) \geq 0, \int^\infty h\xi(h)dh < \infty$) this operator can be extended to a map from $C(t_0, t_1)$ into $C(t_0, t_1)$ [82]; in fact Lipschitz continuous inputs will yeld Lipschitz continuous outputs.

III.Preisach hysteresis model. This model uses a superposition of especially simple independent relay hysteresis operators [12,102]. That is,

$$\mathcal{F}[u](t) = \int\int \mu(\alpha, \beta) \hat{\mathcal{F}}_{\alpha,\beta}[u](t) d\alpha d\beta,$$

where $\mu(\alpha, \beta) \geq 0$ is a weight function, usually with support on a bounded set in the (α, β)-plane, $\hat{\mathcal{F}}_{\alpha,\beta}$ is relay hysteresis operator with thresholds $\alpha < \beta$ and

$$h_U(u) = +1 \text{ on } [\alpha, \infty);$$

$$h_L(u) = -1 \text{ on } (-\infty, \beta].$$

The arbitrary initial state $\eta = \pm 1$ must be chosen if $u(t_0) \in (\alpha, \beta)$.

The Preisach model is founded on a physical assumption: hysteresis is the result of the superposition of the behaviour of independent domains within the material , each of which can be modelled by a simple "flip-flop" relay hysteresis operator.

IV. Krasnosel'skii-Pokrovskii hysteron

Geometric approach is used to define a basic hysteresis operator, called hysteron. Such hysteresis operator is first define as a "play".

In this case we have $|v - u| \leq h$. This defines an active hysteresis operator with $\alpha = -\infty$, $\beta = +\infty$, and a single family of interior curves (Fig.26).

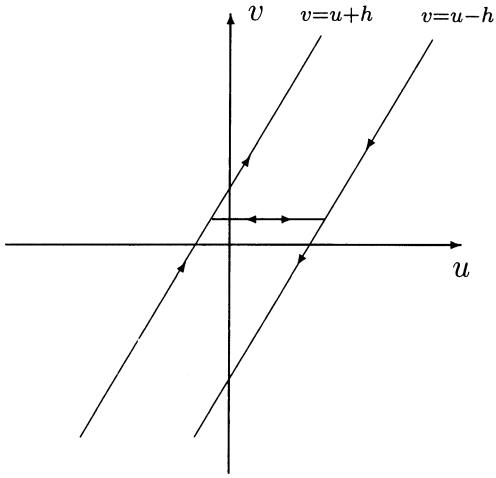

Fig.26. Krasnosel'skii-Pokrovskii hysteron.

For a given input $u(.)$, the output $v(.) \equiv P_h[u](t)$ of the play is

$$P_h[u](t) = u(t) - S_h[u](t),$$

where S_h is the stop of Fig. 25. We shall define a direct formula for P_h. Let $g_h(u, v) = min[u + h, max(u - h, v)]$. If the initial value $v_0 = v(t_0)$ is given and if the input $u(.)$ is monotone, then $P_h[u; v_0](t) = g_h(u(t), v_0)$. If $u(.)$ is piecewise monotone with $u(.)$ monotone on $I_i = [t_{i-1}, t_i]$, $i = 1, \ldots, n$, then

$$P_h[u; v_0](t) = g_h(u(t), v(t_{i-1})) \text{ for } t \in I_i.$$

Then a hysteron $\mathcal{F}$ is defined as a map from piecewise monotone continuous input function $u(.)$ to output functions $v[u](.)$. The domain $\Omega(\mathcal{F}) \subset R^2$ (the interior of which is our hysteresis region $\mathcal{H}$), which defines the input-output relation, is assumed to have the following three properties [82].

Property 6.1 *The intersection $K(u_0) = \Omega(\mathcal{F}) \cap l_{u_0}$ of $\Omega(\mathcal{F})$ with the vertical line $l_{u_0} = \{(u, v) | u = u_0\}$ is a nonempty interval.*

Property 6.2 *The endpoints of $K(u)$, $u \in R$, define two continuous curves $\Phi_L(u)$ (left endpoint) and $\Phi_R(u)$ (right endpoint). The domain of Φ_R is some interval $(-\infty, a_R)$; the domain Φ_L is some interval (b_L, ∞), $b_L < a_R$.*

Property 6.3 *Define $\Omega_0(\mathcal{F}) \subset \Omega(\mathcal{F})$ as the finite open region bounded by Φ_L and Φ_R; stratify this region by a given family of nonintersecting graphs of continuous functions $\pi(.)$ such that the left endpoint of each graph lies on Φ_L and the right endpoint of each graph lies on Φ_R. The remaining points of each graph do not intersect $\Phi_l \cup \Phi_R$.*

The above defines an active hysteresis operator with a single family of interior curves. They then show that any operator defined through the above properties extends uniquely from the class of piecewise monotone inputs to a mapping defined for any continuous input. Let $f(u, z)$ be a given real-valued function of two real variables continuous on $\Omega(\mathcal{F})$ and strictly monotone in z. Krasnosel'skii and Pokrovskii show that any hysteron can be represented in the form

$$\mathcal{F}[u](t) = f(u(t), P(\Gamma_L, \Gamma_R)[u](t)),$$

where $P(\gamma_L, \Gamma_R)$ is a generalized play operator defined by the hysteresis diagram in Fig. 27.

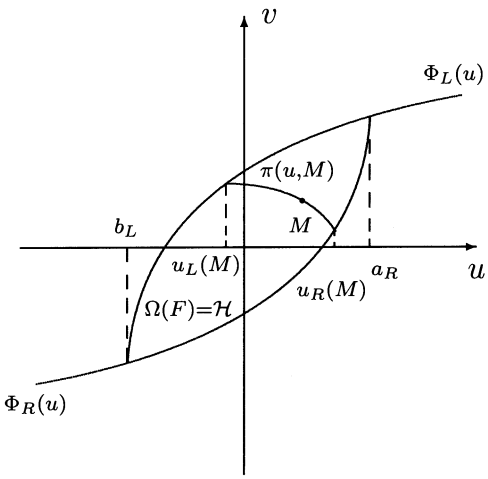

Fig. 27. Hysteresis diagram for a generalized play operator.

More precisely, for a generalized play we are given two continuous nondecreasing fuctions $\Gamma_L(u)$, $\Gamma_R(u)$ defined on respective intervals $(-\infty, a_L)$ and (b_R, ∞), $b_r < a_L$, with $\Gamma_L(u) \geq \Gamma_R(u)$ for all $b_R < u < a_L$. The two curves are connected by horizontal lines, and the output $v(.) = P(\Gamma_L, \Gamma_R)[u](.)$ for continuous monotone input $u(t)$, $t \geq t_0$, is defined as

$$v(t) = \begin{cases} max\{v(t_0, \Gamma_R[u(t)]\} & \text{when } u(t) \text{ is nondecreasing,} \\ min\{v(t_0), \Gamma_L[u(t)]\} & \text{when } u(t) \text{ is nonincreasing.} \end{cases}$$

Note that Krasnosel'skii-Pokrovskii hysteron allows a single family of interior trajectories. To allow two families Krasnosel'skii and Pokrovskii [82] define a prehysteron as any deterministic, static, weakly correct map which maps continuous piecewise monotone inputs $u(.)$ into continuous outputs $v(t) = \mathcal{F}[u](t)$. It is assumed that the initial state (u_0, v_0) at time t_0 is given and intuitively, (u_0, v_0) is in the hysteresis domain $\mathcal{H}$ or on the boundary curves.

Deterministic. $v(t) = \mathcal{F}[u](t)$, for $t \geq t_0$, is uniquely determined by $(t_0, u(t_0), v(t_0)) \equiv (t_0, u_0, v_0)$ and $u(.)$.

Static. 1). $\mathcal{F}[u(.)](t)|_{(t_0,u_0,v_0)} = \mathcal{F}[u(.)](t - t_0 + t_1)|_{(t_0,u_0,v_0)}$ $(t \geq t_0)$; and

2). if we replace the input $u(t)$ by $u(\alpha t + (1-\alpha)t_0)$ with $\alpha > 0$, then the output $v(t)$ is replaced by

$$v(\alpha t + (1-\alpha)t_0) \ (t \geq t_0).$$

Weakly correct. If $\{u_n(.)\}_{n=1}^{\infty}$ and $u_*(.)$ are continuous monotone inputs, $t_0 \leq t \leq t_1$ with $(u_n(t_0), v_n^0)$ and $(u_*(t_0, v_*^0)$ admissible and if $v_n^0 \to v_*^0$, $sup_{[t_0,t_1]}|u_n(s) - u_*(s)| \to 0$, then

$$\mathcal{F}[u_n(.)](t_1)|_{(t_0,u_n(t_0),v_n)} \to \mathcal{F}[u_*(.)](t_1)|_{(t_0,u_*(t_0),v_*)}.$$

The best example of a prehysteron is a sufficiently regular Duhem model characterized by the operator in Fig 24.

7 Appendix C. Describing function method and its application for analysis of Cellular Neural Networks

The frequency response method is a powerful tool for the analysis and design of linear control systems. It is based on describing a linear system by a complex-valued function, the frequency response, instead of differential equation. The power of the method comes from a number of sources. First, graphical representations can be used to facilitate analysis and design. Second, physical insights can be used, because the frequency response functions have clear physical meanings. Finally, the method's complexity only increases mildly with system order. Frequency domain analysis, however cannot be directly applied to nonlinear systems because frequency response functions cannot be defined for nonlinear systems.

For some nonlinear systems an extended version of the frequency response method, called the **describing function method** (the same as the well-known **harmonic balance principle**), can be used to approximately analyze and predict nonlinear behaviour. Even though it is only an approximation method, the desirable properties it inherits from the frequency response method, and the shortage of other systematic tools for nonlinear system analysis, make it an indispensable component of the bag of tools of practicing control engineers. The main use of describing function method is for the predicition of limit cycles in nonlinear systems, although the method has a number of other applications such as prediciting subharmonics, jump phenomena, and the response of nonlinear systems to sinusoidal inputs.

It is well-known that the occurence of limit cycles in nonlinear autonomous systems which admit a Lur'e representation (Fig. 28) but have no spatial dependence can be investigated by resorting to

the describing function technique.

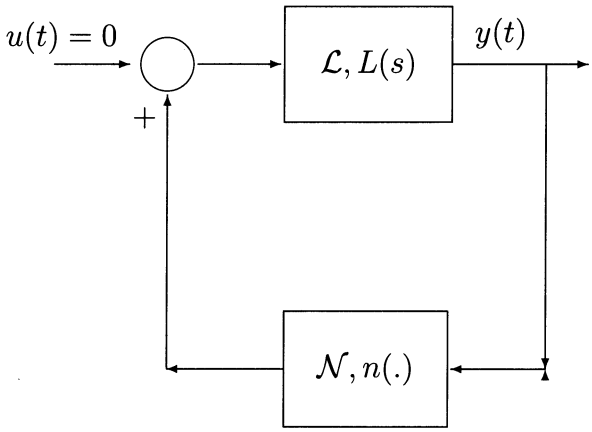

Fig. 28. Lur'e scheme.

Such technique consists of two fundamental steps:

1. The signal entering through the nonlinear block of the Lur'e scheme is approximated by means of a suitable sinusoidal term whose frequency and amplitude are unknown.

2. The higher-order harmonics occuring at the output of the nonlinear block are neglected, i.e. the nonlinear block is replaced by a constant gain having the same input, which minimizes the mean squared error between the output from the nonlinearity and that from the gain itself [50].

Consider now the basic Lur'e scheme in Fig.28, where $\mathcal{L}$ is a linear time- invariant dynamic system and $\mathcal{N}$ is nonlinear time-invariant static and memoryless system. The block $\mathcal{L}$ can be described by its transfer function

$$L(s) = \frac{p(s)}{q(s)} \tag{7.1}$$

where s is the complex variable and $p(.)$ and $q(.)$ are polynomial operators, while the block $\mathcal{N}$ is represented by the nonlinear single-

valued function $n(.)$. The system of Fig.32 is unforced and $y(t)$ denotes its scalar output. In terms of differential equation the system is governed by the form

$$q(D)y(t) + p(D)n[y(t)] = 0 \tag{7.2}$$

where D is the differential operator.

The feedback structure in study is an important class of representation of circuits and systems also with regard to their chaotic dynamics.

Since the methods presented in this appendix are based on a first harmonic study, assume for the system output the form

$$y_0(t) = \mathcal{A} + \mathcal{B}cos\omega t, \quad \mathcal{B}, \omega > 0 \tag{7.3}$$

and assume that the corresponding nonlinearity output $n[y_0(t)]$ is expanded in Fourier series as

$$n[y_0(t)] = N_0(\mathcal{A}, \mathcal{B})\mathcal{A} + N_1(\mathcal{A}, \mathcal{B})\mathcal{B}cos\omega t + \ldots \tag{7.4}$$

The nonlinear system $\mathcal{N}$ is characterized, in an approximate form related to the (steady state) preiodic regime, by the bias and ω frequency real gains

$$N_0(\mathcal{A}, \mathcal{B}) = \frac{1}{2\pi\mathcal{A}} \int_{-\pi}^{\pi} n[y_0(t)]d\omega t \tag{7.5}$$

$$N_1(\mathcal{A}, \mathcal{B}) = \frac{1}{\pi\mathcal{B}} \int_{-\pi}^{\pi} n[y_0(t)]cos\omega t d\omega t \tag{7.6}$$

which are the well-known describing function terms. As an extension, one can define higher frequency complex gains $N_k(\mathcal{A}, \mathcal{B})$, $k = 2, 3, \ldots$, which describe the remaining terms of (7.4).

Definition 7.1 Equilibrium points. *The admissible constant output values $y = E_j$, $j = 1, 2, \ldots$ of the system. From (7.1) and (7.2) they solve the equation*

$$y + n(y)L(0) = 0. \tag{7.7}$$

The local stability features of the equilibrium points E_j can be invsetigated by standard linear techniques substituting to the block $\mathcal{N}$ the gain (linearization)

$$n'(E_j) = \frac{dn(y)}{dy}|_{y=E_j}. \tag{7.8}$$

Definition 7.2 Predicted Limit Cycles. *The approximative periodic solutions $y_0(t)$ of the system derived by the describing function method. According to (7.3), (7.5) and (7.6) the predicited limit cycles conditions are:*

$$\mathcal{A}[1 + N_0(\mathcal{A}, \mathcal{B})]L(0) = 0 \tag{7.9}$$

$$1 + N_1(\mathcal{A}, \mathcal{B})L(j\omega) = 0. \tag{7.10}$$

Such equations follow by imposing the harmonic balance principle [48] along the system loop of Fig.28, where the transfer function L and the nonlinearity n have been evaluated at their steady state gains of zero and ω frequency. Equations (7.9) and (7.10) must be solved with respect to the parameters $\mathcal{A}$, $\mathcal{B}$ and ω and, as a particular powerful interpretation, condition (7.10) graphycally corresponds to the intersection of the Nyquist plot of $L(j\omega)$ with the function $-1/N_1$. In general, when $\mathcal{B}$ tends to zero the relation (6.10) expresses the Hopf bifurcation existence and the relation (7.9) leads to a bias value $\mathcal{A} = E_j$, being E_j the equlibrium points where the bifurcation occurs. Such a point can be viewed as the generator of a family of periodic solutions.

The stability features concerning $y_0(t)$ can be evaluated from (7.9) and (7.10) by means of the Loeb criterion or similar procedure [48].

Any periodic solution $y_0(t)$ indicates in the state space a limit cycle which is called predicted since it derives from a heuristic analysis and its exact shape and even existence are uncertain. The reliability of the prediciton depends on the distortion along the system loop.

Definition 7.3 Distortion. *The amount of the neglected higher harmonics concerning a predicted limit cycle $y_0(t)$ of frequency ω. It can be expressed by the quantity*

$$\Delta = \frac{||\tilde{y}_0(t) - y_0(t)||_2}{||y_0(t)||_2}. \tag{7.11}$$

here, the symbol $||.||_2$ denotes the L_2 norm on the period $2\pi/\omega$ and $\tilde{y}_0(t)$ is the steady state periodic output of the system that is obtained when the closed loop is broken just before $\mathcal{N}$ (see Fig.28) and the signal $y_0(t)$ is injected into $\mathcal{N}$.

Small values of Δ, in a symbolic way $\Delta < \eta$, indicate that the open loop system is an efficient low-pass filter and that the corresponding predicted limit cycle is reliable. Indeed, rigorous arguments can be used to guarantee the existence of a true periodic solution in a defined neighbourhood of the predicted one under suitable conditions on Δ [50].

The introduced elements are generally easy to compute even for high-order systems due to the use of input-output models in Fig. 28, and in simple cases, they result in analytical forms.

Let us rewrite the CNN with linear cloning template (1.4) in the following form:

$$\frac{d}{dt}x_{ij}(t) = -x_{ij}(t) + \sum_{kl \in N_r} A_{k+i,l+j}x_{kl}(t) + \sum_{kl \in N_r} B_{k+i,l+j}u_{kl} + I,$$
$$1 \leq i,k \leq N_1, 1 \leq j,l \leq N_2. \tag{7.12}$$

For simplicity we define the linearized template masks:

$$a(n_1,n_2) = \begin{cases} A_{00} - 1 & (n_1,n_2) = (0,0) \\ A_{-n_1,-n_2} & \text{for } -n_1,-n_2 \in N_r \\ 0 & \text{otherwise} \end{cases}$$

$$b(n_1,n_2) = \begin{cases} B_{-n_1,-n_2} & \text{for } -n_1,-n_2 \in N_r \\ 0 & \text{otherwise} \end{cases}. \tag{7.13}$$

We shall assume that the sequences $x_0(n_1,n_2)$ and $u(n_1,n_2)$ are defined to be zero for all integers n_1 and n_2 where the supplied data are not defined. Then the dynamics can be written in convolution form:

$$\frac{d}{dt}x_t(n_1,n_2) = a(n_1,n_2)*x_t(n_1,n_2)+b(n_1,n_2)*u(n_1,n_2)+I. \quad (7.14)$$

We shall make use of the two-dimensional Discrete Space Fourier Transform (DSFT):

$$\tilde{F}(\omega_1,\omega_2) = \sum_{n_1}\sum_{n_2} f(n_1,n_2)e^{-j\omega_1 n_1}e^{-j\omega_2 n_2} \quad (7.15)$$

and can be reconstructed by the Inverse DSFT

$$f(n_1,n_2) = \frac{1}{(2\pi)^2}\int_{-\pi}^{\pi}\int_{-\pi}^{\pi}\tilde{F}(\omega_1,\omega_2)e^{j\omega_1 n_1}e^{j\omega_2 n_2}d\omega_1 d\omega_2. \quad (7.16)$$

Some of the interesting properties of the DSFT along with some notations are given below:
1. Real symmetric $f(n_1,n_2) \leftrightarrow \tilde{F}(\omega_1,\omega_2)$ Real symmetric
2. $f(0,0) = (1/(2\pi)^2)\int_{-\pi}^{\pi}\int_{-\pi}^{\pi}\tilde{F}(\omega_1,\omega_2)d\omega_1 d\omega_2$. In fact, from the definition, it can be seen that $f(0,0)$ adds to the new basis representation equally and can therefore be considered an offset. That is, changing the center element $f(0,0)$ just shifts the curve $\tilde{F}(\omega_1,\omega_2)$ up or down.
3. $f(n_1,n_2) * g(n_1,n_2) \leftrightarrow \tilde{F}(\omega_1,\omega_2)\tilde{G}(\omega_1,\omega_2)$
4. $\delta(n_1,n_2)$ is the discrete delta function that is zero everywhere wxcept $\delta(0,0) = 1$. $\delta(\omega_1,\omega_2)$ is the continuous support delta function that is zero everywhere except it has area one at the origin.

Now let us consider the case when we have an infinite array. Assuming all the DSFT's exist, the dynamics can be written in the new basis by transforming (7.14) into

$$\frac{d}{dt}\tilde{X}(\omega_1,\omega_2) = \tilde{A}(\omega_1,\omega_2)\tilde{X}_t(\omega_1,\omega_2)+ \quad (7.17)$$
$$+\tilde{B}(\omega_1,\omega_2)\tilde{U}(\omega_1,\omega_2) + I\delta(\omega_1,\omega_2)$$

which is uncoupled in spatial frequency - that is, for each of the uncountable number of ω_1, ω_2, this is a single linear first order ordinary differential equation. This equation describes the manner in which the coefficients of each of the basis functions (modes) of

the new basis changes in time. The dynamics of the modes evolve independently for each spatial frequency.

The infinite array is convinient for discussion since the basis representation can be discussed independent of array size. However, it can be shown that these results are applicable to the the finite array size of real circuits. Consider the $N_1 \times N_2$ CNN for which $u(n_1, n_2)$ and $x(n_1, n_2)$ are defined on $n_1 \in \{0, 1, \ldots, N_1 - 1\}$, $n_2 \in \{0, 1, \ldots, N_2 - 1\}$. Let first the connections are such that give the topology of a torus. That is, cells on the left and right boundaries see each other as neighbours and cells on the top and bottom see each other as neighbours. Such a finite system has an infinite system representation with equivalent dynamics on the region of interest. An infinite periodic function of this sort can always be written in the basis of the Discrete Fourier Series. That is

$$x(n_1, n_2) = \frac{1}{N_1 N_2} \sum_{k_1=0}^{N_1-1} \sum_{k_2=0}^{N_2-1} \tilde{X}(k_1, k_2) e^{j(2\pi/N_1)k_1 n_1} e^{j(2\pi/n_2)k_2 n_2}. \tag{7.18}$$

It is easy to show that writing (7.14) in this basis finally gives

$$\frac{d}{dt}\tilde{X}_t(k_1, k_2) = \tilde{A}(\frac{2\pi k_1}{N_1}, \frac{2\pi k_2}{N_2})\tilde{X}_t(k_1, k_2) + \\ + \tilde{B}(\frac{2\pi k_1}{N_1}, \frac{2\pi k_2}{N_2})\tilde{U}(k_1, k_2) + I\delta(k_1, k_2).$$

And, in fact,

$$\tilde{X}_t(k_1, k_2)\tilde{X}(\omega_1, \omega_2)|_{\omega_1=(2\pi/N_1)k_1, \omega_2=(2\pi/N_2)k_2}.$$

Therefore, (7.18) can be used, but only a finite number of ω_1, ω_2 are needed.

Consider now the finite array with reflected connections. From the point of view of the cells, there is a reflected array at every boundary so that a cell sees itself as its immediate neighbour off the array. This would be much easier to implement in circuity since the connections remain local. This method depends critically on the symmetry of the A-template. An infinite periodic function of this sort can be written in the basis of the Discrete Cosine Series

$$x(n_1, n_2) = \frac{1}{N_1 N_2} \sum_{k_1=0}^{N_1-1} \sum_{k_2=0}^{N_2-1} \tilde{X}'(k_1, k_2)$$

$$.cos(\frac{\pi k_1(2n_1+1)}{2N_1}).cos(\frac{\pi k_2(2n_2+1)}{2N_2}).$$

Again we write (7.14) in the new basis

$$\frac{d}{dt}\tilde{X}_t'(k_1,k_2) = \tilde{A}(\frac{\pi k_1}{N_1},\frac{\pi k_2}{N_2})\tilde{X}_t'(k_1,k_2)$$

$$+\tilde{B}(\frac{\pi k_1}{N_1},\frac{\pi k_2}{N_2})\tilde{U}'(k_1,k_2) + I\delta(k_1,k_2).$$

Many other boundary conditions are possible and have been considered [35]. The discussion on boundary conditions showed that we only need to study one differential equation in order to understand the behaviour of any of these systems. The boundaries affect only the spatial frequency of the modes, and the eigenvalues can be found by appropriate sampling of the DSFT.

Returning to the original modal differential equation (7.17), the time solution can be written down for each ω_1, ω_2 from elementary linear system theory as follows:

When $\tilde{A}(\omega_1,\omega_2) \neq 0$:

$$\tilde{X}_t(\omega_1,\omega_2) = e^{\tilde{A}(\omega_1,\omega_2)t}\tilde{X}_0(\omega_1,\omega_2) + \frac{1}{\tilde{A}(\omega_1,\omega_2)} \tag{7.19}$$

$$.[e^{\tilde{A}(\omega_1,\omega_2)t} - 1]\tilde{B}(\omega_1,\omega_2)\tilde{U}(\omega_1,\omega_2).$$

When $\tilde{A}(\omega_1,\omega_2) = 0$:

$$\tilde{X}_t(\omega_1,\omega_2) = \tilde{X}_0(\omega_1,\omega_2) + t\tilde{B}(\omega_1,\omega_2)\tilde{U}(\omega_1,\omega_2). \tag{7.20}$$

The eigenvalues of $\tilde{A}(\omega_1,\omega_2)$ determine the stability of the linear system. The connection between stability, convergence speed, and processing function through the transformed linearized template mask $\tilde{A}(\omega_1,\omega_2)$ makes template design in the frequency domain very attractive. Some observations can be made about the relationship between the A template and $\tilde{A}(\omega_1,\omega_2)$. Template symmetry, which we assume throughout, implies that all the $\tilde{A}(\omega_1,\omega_2)$ will be ral - the modes are not phase shifted. Templates with a small radius will only use a few terms of (6.15), and therefore, $\tilde{A}(\omega_1,\omega_2)$ will be very smooth and slowly varying.

If for all (ω_1, ω_2) we have

$$\tilde{A}(\omega_1, \omega_2) < 0$$

then the system is stable, and all the exponential terms will tend to zero as time goes to infinity. The stable equilibrium, which is independent of the initial conditions, can easily be found by finding the limit of (7.18)

$$\tilde{X}_\infty(\omega_1, \omega_2) = \tilde{H}(\omega_1, \omega_2)\tilde{U}(\omega_1, \omega_2)$$

where

$$\tilde{H}(\omega_1, \omega_2) \triangleq \frac{-1}{\tilde{A}(\omega_1, \omega_2)}\tilde{B}(\omega_1, \omega_2). \tag{7.21}$$

The equilibrium state can be thought as a version of the input that has been spatially filtered by the transfer function $\tilde{H}(\omega_1, \omega_2)$. The filter $\tilde{H}(\omega_1, \omega_2)$ can be shown to have two important properties: zero-phase and infinite impulse response. Because the A and B templates are real and symmetric , their DSFT's are as well. Therefore, the phase of a spatial sinusoid in the input image is not modified by the transfer functions $\tilde{A}(\omega_1, \omega_2)$ and $\tilde{B}(\omega_1, \omega_2)$. Since $\tilde{H}(\omega_1, \omega_2)$ is a simple function of these transfer characteristic, it will inherit the zero-phase property. And, because the transfer function is made by finding the inverse of the filter $a(n_1, n_2)$ it is, typically, spatially infinite in extent. That is, due to the feedback in the dynamics, the local connections of the A template can be used to perform non-local filtering.

The algorithm which we apply for studying the dynamics of a CNN is the following:

1. Let us line up the CNN state equation (7.12) in $n = N_1.N_2$ dimensional vectors. We will look for periodic solutions of the form

$$x_i = \xi(\Omega_0 l + \omega_0 t) \tag{7.22}$$

for some function $\xi : \mathbf{R} \to \mathbf{R}$ and some $0 \leq \Omega_0 < 2\pi$, $\omega_0 = 2\pi/T$, where $T_0 > 0$ is the minimal period of (7.20). Note that the temporal frequency ω_0 and the spatial frequency Ω_0 are part of the solution, they are not given a priori and must be determined. In the case of circular array (which is our main assumption for the boundary conditions in Chapter 4), the possible values for Ω_0 can

be easily obtained. Indeed, as $x_l(t)$ is assumed to be periodic, with minimal period T_0, one has

$$\xi(\Omega_0 l + \omega_0 t) = \xi(\Omega_0 l + \omega_0 t + k\omega_0 T_0) \tag{7.23}$$

for any $k \in \mathbf{N}$. On the other hand, the periodic boundary conditions ((1.13) Chapter 1) impose that

$$\xi(\omega_0 t) = \xi(\Omega_0 n + \omega_0 t). \tag{7.24}$$

Combining (7.21) with $l = 0$ and (7.22), we get

$$\Omega_0 = \frac{k}{n}\omega_0 T_0 = \frac{2k\pi}{n}, 0 \leq k \leq n-1, \tag{7.25}$$

where the range of values for k is determined by the condition $0 \leq \Omega_0 \leq 2\pi$.

Finally, we will assume that this function is not only periodic, but satisfies

$$\xi(\Omega_0 l + \omega_0 t) = -\xi(\Omega_0 l + \omega_0 t + (2k+1)\pi) \tag{7.26}$$

for any $k \in \mathbf{N}$. It is however practically impossible to compute (7.20) exactly for other values of k, so that an approximative spectral approach - describing function method is very useful.

2. We apply Continuous Time Discrete Fourier Transform (CTDFT) from finite discrete space l and continuous time t to discrete frequency Ω and continuous temporal frequency ω:

$$\tilde{X}_\Omega(\omega) = \tilde{X}_k(\omega) = \sum_{l=1}^{n} \int_{-\infty}^{\infty} x_l(t) e^{-i(2\pi kl/n)+\omega t)} dt. \tag{7.27}$$

Therefore the transfer function will be in the form

$$\tilde{H}_\Omega(\omega) = \frac{\tilde{X}_\Omega(\omega)}{\tilde{Y}_\Omega(\omega)} \tag{7.28}$$

3. We will suppose that the state variable has the form

$$x_l(t) = X_{m_0} sin(\omega_0 t + l\Omega_0) \tag{7.29}$$

which amounts to specify as ansatz for (7.20), which is $\xi(t) = X_{m_0} sin\psi$. The amplitude X_{m_0}, the temporal frequency ω_0 and the spatial frequency Ω_0 are therefore the unknowns to be determined.

We will approximate the periodic output of the CNN $y_l(t) = f(x_l(t))$ by the fundamental component of its Fourier expansion:

$$y_l(t) \approx Y_{m_0} sin(\omega_0 t + l\Omega_0) \tag{7.30}$$

and

$$Y_{m_0} = \frac{1}{\pi} \int_{-\pi}^{\pi} f(X_{m_0} sin\psi) sin\psi d\psi. \tag{7.31}$$

4. Then the ratio of the transformations of these two periodic solutions is

$$\frac{\tilde{X}_\Omega(\omega)}{\tilde{Y}_\Omega(\omega)} = \frac{X_{m_0}}{Y_{m_0}}$$

which imposes the following constraints on the real and imaginary parts of the transfer function

$$\Re\{\tilde{H}_{\Omega_0}(\omega_0)\} = \frac{X_{m_0}}{Y_{m_0}} \tag{7.32}$$

$$\Im\{\tilde{H}_{\Omega_0}(\omega_0)\} = 0. \tag{7.33}$$

4. Finally, if for a given value of Ω_0 we can find a solution (ω_0, X_{m_0}) to the above two equations, the describing function method predicts the existence of a periodic solution with an amplitude of approximately X_{m_0} and a minimal period of approximately $T_0 = 2\pi/\omega_0$.

To apply this technique, we will represent first a circular CNN (i.e. CNN with periodic boundary conditions (1.13) Chapter1) as a Lur'e system. As reported in [146] an infinite length CNN can be represented in Lur'e system form shown in Fig. 29.

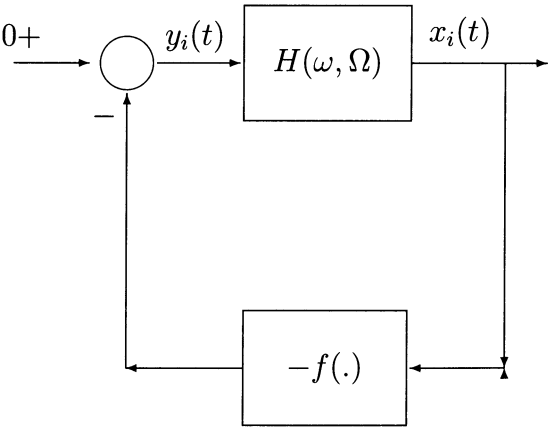

Fig. 29. Representation of a CNN as a Lur'e system.

We shall consider the following CNN system with N cells:

$$\begin{aligned} \dot{x}_i(t) &= -x_i(t) - sy_{i-1}(t) + py_i(t) + sy_{i+1}(t) \\ y_i(t) &= f(x_i(t)), \end{aligned} \tag{7.34}$$

where the nonlinearity $f(.)$ is the piecewise-linear function $f(x) = (|x+1|-|x-1|)/2$ and $s > \frac{p-1}{2}$ so that the network operates in a global propagation mode. In fact it has been shown in [146] that if the condition $s > \frac{p-1}{2}$ is not satisfied, every trajectory converges to an equilibrium point, which excludes the existence of any periodic solution. Moreover, let us consider a Continuous-Time Discrete-Space Fourier Transform (CTDSFT) $G(\omega, \Omega) = \mathcal{F}\{g_n(t)\}$ from continuous time t and discrete space n to continuous temporal frequency ω and continuous spatial frequency Ω, defined by

$$G(\omega, \Omega) = \sum_{n=-\infty}^{\infty} e^{-j\Omega n} \int_{-\infty}^{\infty} g_n(t) e^{-j\omega t} dt. \tag{7.35}$$

By taking the CTDSFT of both members of the first equation in (7.34), which is linear, we obtain that the transfer function of the linear part of the system in Fig.29 can be expressed by

$$H(\omega,\Omega) = \frac{X(\omega,\Omega)}{Y(\omega,\Omega)} = \frac{re^{-j\Omega} + p + se^{j\Omega}}{1 + j\omega}, \tag{7.36}$$

where $X(\omega,\Omega) = \mathcal{F}\{x_i(t)\}$ and $Y(\omega,\Omega) = \mathcal{F}\{y_i(t)\}$. Since we have a finite array of N cells with periodic boundary conditions, the spatial frequency Ω assumes only a finite set of values (7.25).

The fundamental assumptions made in applying the describing function technique are the following:

1). One suppose that (7.34) has a periodic solution in the form

$$x_i(t) = X_m sin(\Omega_0 i + \omega_0 t) \tag{7.37}$$

which amounts to specify an ansatz for $\xi(.)$ in the general form (7.22) of the system solution, which is $\xi(\psi) = X_m sin\psi$. The amplitude, the temporal frequency ω_0, and the spatial frequency Ω_0 are therefore the unknowns to be determined.

2). The periodic output $y_i(t) = f(x_i(t))$ of the nonlinear block corresponding to the sinusoidal input (7.37) is approximated only by the fundamental component of its Fourier series expansion

$$y_i(t) \approx Y_m sin(\Omega_0 i + \omega_0 t)$$

where

$$Y_m = \frac{1}{\pi}\int_{-\pi}^{\pi} f(X_m sin\psi) sin\psi d\psi. \tag{7.38}$$

By considering the Lur'e representation of (7.34), one can easily determine from (7.36) that the unknown parameters in (7.37) have to satisfy the following equations:

$$\Re\{H(\omega_0,\Omega_0)\} = \frac{p + 2s\omega_0 sin\Omega_0}{1 + \omega_0^2} = \frac{X_m}{Y_m}, \tag{7.39}$$

$$\Im\{H(\omega_0,\Omega_0)\} = \frac{2ssin\omega_0 - p\omega_0}{1 + \omega_0^2} = 0. \tag{7.40}$$

The seond constraint (7.40) links the spatial and temporal frequences by

$$\omega_0 = \frac{2s}{p} sin\Omega_0 \tag{7.41}$$

whereas using (7.39) and (7.38), one obtains that the amplitude X_m of the oscillations is given by the root of the following implicit equation:

$$X_m = \frac{2p}{\pi}[X_m arcsin\frac{1}{X_m} + \sqrt{1 - \frac{1}{X_m^2}}]. \tag{7.42}$$

The conclusion is summarized in the following proposition [146].

Proposition 7.1 *A CNN (7.34) with periodic boundary conditions, made of N cells with $s > \frac{p-1}{2}$, possesses at least $(N-1)/2$ different nontrivial periodic solutions, whose spatial frequencies are $\Omega_0 = \frac{2\pi k}{N}$, $1 \leq k \leq (N-1)/2$.*

In order to validate the accuracy of the achieved result we present numerical simulations for $N = 20$, $p = 2$, and $s = 3$. According to the previous proposition, the network possesses at least nine periodic solutions, moreover the corresponding values of T_0 and Ω_0, that can be computed using (7.25) and (7.41) are reported in Table I.

Simulation		*Prediction (Prop.1)*	
T_0	Ω_0	T_0	Ω_0
7.354	0.314	6.778	$\pi/10$
3.883	0.628	3.563	$\pi/5$
2.837	0.943	2.589	$3\pi/10$
2.418	1.257	2.202	$2\pi/5$
2.300	1.571	2.094	$\pi/2$
2.418	1.884	2.202	$3\pi/5$
2.837	2.119	2.589	$7\pi/10$
3.883	2.514	3.563	$4\pi/5$
7.353	2.827	6.778	$9\pi/10$

TABLE I
Comparison between the predicted and the simulated values of T_0 and Ω_0.

References

[1] Agranovich G.,Litsyn E.,Slavova A.,Discrete-continuous control for chaotic cellular neural networks, C.R.Acad.Bulg.Sci, 55:3, 2002.

[2] Arena P., A mechatronic lampreycontrolled by analog circuits, Proceedings 9th IEEE Mediterranean Conference on Control and Automation, Dubrovnik, Croatia, 2001.

[3] Arena P., Fortuna L., Branciforte M., Realization of a reaction- diffusion CNN algorithm for locomotion control in an hexapode robot, Journal of VLSI Signal Processing, 23:267-280, 1999.

[4] Arena P., Fortuna L., Frasca M., Attitude control in walking hexapod robots:an analogic spatio-temporal approach, Int.Journal on Circuit Theory and Applications, 2002 (in press).

[5] Arena P., Fortuna L., Occhipinti L., A CNN algorithm for real time analysis of DNA microarrays, IEEE Trans. CAS, I:Fundamental theory and applications, in press.

[6] Atherton D.P., *Nonlinear Control Engineering*, London:Van Nostrand Reinhold, 1975.

[7] Atherton D.P., *Stability of Nonlinear Systems*,Letchworth, UK: Research Study Press (Wiley), 1981.

[8] Bálya D., Roska B., Roska T., Werblin F., A CNN framework for modelling parallel processing in a mammalian retina, Int. Journal on Circuit Theory and Applications, 30:2, 2002 (in press).

[9] Bergen A.R., Chua L.O., Mees A.I., Szero E., Error bounds for general describing function problems, IEEE Trans. CAS, 1982; 29:6:345- 354.

[10] Brazhnik P., Tyson J., On travelling wave solutions of Fisher's equation in two spatial dimensions, SIAM J.Appl.Math., 1999; 60:2:371- 391.

[11] Britton N.F., *Reaction-Diffusion Equations and Their Applications to Biology*, New York:Academic, 1986.

[12] Brokate M., Visintin A., Properties of the Preisach model of hysteresis, J.Reine Andew. Math., 1989; 402:1-40.

[13] Chow S.-N., Mallet-Paret J., Pattern formation and spatial chaos in lattice dynamical systems-part I, IEEE Trans. CAS-I, 42:10:746-751, 1995.

[14] Chow S.-N., Mallet-Paret J., Dynamics of lattice differential equations, Int.Journal of Bifurcations and Chaos, 6:9:1605-1621, 1996.

[15] Chua L.O., *CNN:A Paradigm for complexity*, World Scientific Pub Co, 1998.

[16] Chua L.O., Dynamic nonlinear networks: state of the art, IEEE Trans. Circuits and Syst., 1980; CAS-27:1059-1087.

[17] Chua L.O., Desoer C.A., Kuh E.S., *Linear and Nonlinear Circuits*, New York:McGrow-Hill, 1985.

[18] Chua L.O., Green D.N., A quantitative analysis of the behavior of dynamic nonlinear networks: stability of autonomous networks, IEEE Trans. Circuits and Syst., 1976; CAS-23:355-379.

[19] Chua L.O., Gulak G., Pierzchala E. (editor), *Cellular Neural Networks and Analog VLSI*, Kluwer Academic Press, 1998.

[20] Chua L.O., Hasler M., Moschytz G.S., Neirynsk J., Autonomous cellular neural networks: a unified paradigm for pattern formation and active wave propagation, IEEE Trans. CAS-I, 1995; 42:10:559-577.

[21] Chua L.O., Roska T., *Cellular neural networks and visual computing - Foundations and Applications*, Cambridge University Press, 2001.

[22] Chua L.O., Roska, T., Stability of a class of nonreciprocal cellular neural networks, IEEE Trans. Circuits Syst., 1990; 37:1520-1527.

[23] Chua L.O., Roska, T., Cellular Neural Networks with nonlinear and delay-type template elements and non-uniform grids, Int.J.Circuit Theory and Applicat., 1992; 20:449-451.

[24] Chua L.O., Roska T., The CNN paradigm, IEEE Trans. Circuits and Syst., 1993; 40:147-156.

[25] Chua L.O., Wu C.W., On the universe of stable CNN, Int. J. Circuit theory and Appl., 1992; 20:497-572.

[26] Chua L.O., Wang N.N., On the application of degree theory to the analysis of resistive nonlinear networks, Int. J. Circuit Theory and Appl., 1997; 5:35-68.

[27] Chua, L.O, Yang, L., Cellular neural networks: Theory, IEEE Trans. Circuits Syst. 1988; 35:1257-1272.

[28] Chua, L.O, Yang, L., CNN: Applications, IEEE Trans. Circuits Syst., 1988; 35:1273 -1299.

[29] Civalleri P.P., Gilli M., Pandolfi L., On stability of cellular neural networks with delay, IEEE Trans. CAS, 1993; 40:270-272.

[30] CNN Software Library, Ver1.1, *Analogical and Neural Computing Laboratory*, Budapest, 2000.

[31] Cohen M., Grossberg S., Absolute stability of global pattern formation and parallel memory storage by competitive neural networks, IEEE Trans. Syst., Man Cyber., 1983; SMC-13:815-826.

[32] Coleman B.D., Hodgdon M.L., A constitutive relation for rate- independent hysteresis in ferromagnetically soft materials, Int.J.Engrg.Sci., 1986; 24:897-919.

[33] Coleman B.D., Hodgdon M.L., On a class of constitutive relations for ferromagnetic hysteresis, Arch.Rational Mech. Anal., 1987; 99:375-396.

[34] Cronin J., *Fixed points and topological degree in nonlinear analysis*, Amer. Math. Soc., Providence, R.I., 1964

[35] Crounse K.R., Chua L.O., Thitan P., Setti G., Characterization and dynamics of pattern formation in CNNs, Int. J. of Bifurcation and Chaos, 1996; 6:9:1703-1723.

[36] Crounse K.R., Roska T., Chua L.O., Image halftoning with Cellular Neural Networks, IEEE Trans. CAS-II, 40:4:267-283, 1993.

[37] Cruz J.M., Chua L.O., A CNN chip for connected component detection, IEEE Trans. Circuits and Syst., 1991; 38:812-817.

[38] Davis P.J., *Circulant Matrices*, New York:Wiley, 1979.

[39] Desoer C.A., Vidyasagar, M., *Feedback Systems:Input-Output Properties*, Academic, New York, 1975.

[40] Desoer C.A., Wu F.F., Nonlinear monotone networks, SIAM J.Appl.Math., 1974; 26:313-333.

[41] Dembo A., Farotimi O., Kailath T., High-order absolutely stable neural networks, IEEE Trans. Circuits and Syst., 1991; CAS-38:57-65.

[42] Driver R.D., *Ordinary and Delay Differential equations*, Applied Mathematical Sciences, vol.20, Springer, New York, 1977.

[43] Duhem P., Die dauernden Aenderungen und die Thermodynamik, I,Z. Phys.Chem., 1897; 22:543-589.

[44] Everett D.H., "The solid-Gas Interface", In E.A.Flood,ed., Vol. 2, Marcel Dekker, New York, pp. 1055-1113, 1967.

[45] Fermi E., Pasta J.R., Ulam S.M., "Studies of nonlinear phenomena", In *Coll. Works of F.Fermi*, vol. 2, Univ. Chicago Press, pp. 978-988, 1965.

[46] Forti M., Manetti S., Marini M., E. Panti, A Topological Approach to Analyze Equilibrium Configurations of Neural Network Circuits, Proc. Midwest Symp. on Circuits Syst., Lafayette, 1994.

[47] Forti M., Manetti S., Marini M., A condition for global convergence of a class of symmetric neural circuits, IEEE Trans. CAS-I, 1992; 39:6:480-483.

[48] Genesio R., Tesi A., A harmonic balance approach for chaos prediction: the Chua's circuit, Int.J.of Bifurcation and Chaos, 1992; 2:61-79.

[49] Genesio R., Tesi A., Harmonic balance methods for the analysis of chaotic dynamics in nonlinear systems, Automatica, 1992; 28:531-548.

[50] Genesio R., Tesi A., Villoresi F., A frequency approach for analyzing and controlling chaos in nonlinear circuits, IEEE Trans. CAS-I, 1993; 40:11: 819-827.

[51] Gilli M., Stability of CNN and delayed CNN with nonpositive templates and nonmonotonic output function, IEEE Trans. CAS-I, 1994; 41:8: 518-528.

[52] Gilli M., Strange attractors in delayed CNN, IEEE Trans. CAS-I, 1993; 40:11:849-853.

[53] Gilli M., Civalleri P.P., A spectral approach to the study of propagation phenomena in CNNs, Int. Journal of Circuit Theory and Applications, 1996; 24:1:37-47.

[54] Goras L., Chua L.O., Turing patterns in CNNs-Part II:Equations and behaviors, IEEE Trans. Circuits and Syst.-II, 1995; 42:10:612-626.

[55] Grebenikov E.A., Ryabov Yu.A., *Constructive Methods in the Analysis of Nonlinear Systems*, Mir Publisher, Moscow, 1979 (English translation).

[56] Green M.M., Wilson A.N., Jr., (Almost) half of any circuit's operating points are unstable, IEEE Trans. CAS-I, 1994; 41:4.

[57] Green M.M., Willson, A.N.,Jr., How to identify unstable equilibrium points, IEEE Trans. Circuits Syst., 1992; 39:820-832.

[58] Guckenheimer, J., Holmes, Ph., *Nonlinear Oscillations, Dynamical Systems, and Bifurcations of Vector Fields.* Springer, 1983.

[59] Guzelis C., Chua L.O., Stability analysis of generalized CNN, Int. J. Circuit Theory and Appl., 1993; 21:1-33.

[60] Hale, J.,*Ordinary Differential Equations*, Wiley- Interscience, 1963.

[61] Hale, J., *Theory of Functional Differential Equations*, New York, Springer, 1977.

[62] Hale, J., Kocak, H., *Dynamics and Bifurcations*, Springer, 1991.

[63] Hairer E., Norsett S.P., Wanner G., *Solving Ordinary Differential Equations I*, Nonstiff Problems, Springer, 1987

[64] Hanggi M., Moschytz G., *Cellular Neural Networks: Analysis, Design and Optimization*, Kluwer Academic Publishers Pub., 2000.

[65] Hirsch M.W., Convergent activation dynamics in continuous time network, Neural Networks, 1989; 2:331-349.

[66] Hirsch M.W., Systems of differential equations that are competitive and cooperative II: Convergence almost everywhere, SIAM J. Math. Anal., 1985; 16:423-439.

[67] Hodgdon M.L., Applications of a theory of ferromagnetic hysteresis, IEEE Trans. Magn., 1988; MAG-24:218-221.

[68] Hodgdon M.L., Mathematical theory and calculations of magnetic hysteresis curves, IEEE Trans. Magn., 1988; MAG-24:3120-3122.

[69] Hodgkin A.L., Huxley A.F., A quantitative description of membraine current and its application to conduction and excitation in nerve, J. Physiology, 1952; 117:500-544.

[70] Hopfield J.J., Neurons with graded responce have collective computational properties like those of two-state neurons, Proc. Nat. Acad. Sci. USA, 1984; 81:3088-3092.

[71] Hoppensteadt F.G., Jäger W., Pöppe C., "A hysteresis model for bacterial growth patterns, in Modelling of Patterns

in Space and Time", In W. Jäger and J.D.Murray, eds., Lecture Notes in Biomath, 55, Springer-Verlag, Berlin, New York, pp.123-134, 1984.

[72] Int.J.Circuit Theory and Applications, Special issue on Cellular Neural Networks, vol. 20, 1992.

[73] Jäger W., A diffusion-reaction system modelling spatial patterns, Proc. Equadiff. 5, Bratislava, 1981, Teubner, Leipzig, 151-158, 1982.

[74] Jones D.S., Sleeman B.D., *Differential Equations of Mathematical Biology*, George Allen and Unwin, London, 1983.

[75] Kadar G., Della torre E., Hysteresis modelling I. Noncongruence, IEEE Trans. Magn., 1987; MAG-23:2820-2822.

[76] Kadar G., On the Preisach function of ferromagnetic hysteresis, J. Appl.Phys., 1987; 61:4013-4015.

[77] Kantorovich L.V., Krylov V.I., *Approximate Methods of Higher Analysis*, New York:Interscience, 1964.

[78] Kato T., *Perturbation Theory for Linear Operators*, Berlin, Springer, 1976.

[79] Kelly D.G., Stability in contractive nonlinear networks, IEEE Trans. Biomedical Eng., 1990; 37:231-242.

[80] Khalil H.K., *Nonlinear systems*, New York:McMillan, 1992.

[81] Krasnosel'skii M.A., *Topological Methods in the Theory of Nonlinear Integral Equations*, Pergamon Press, New York, 1964.

[82] Krasnosel'skii A.M., Pokrovskii A.V. *Systems with Hysteresis*, Nauka, Moscow (in Russian), 1983.

[83] Krinsky V.I., Biktashev V.N., Efimov I.R., Autowave principles for parallel image processing, Physica D., 1991; 49:247-253.

[84] Lee C.-C., Pineda de Gyvez J., Color image processing in a Cellular Neural Network environment, IEEE Trans. on Neural Networks, 7:5:1086-1098, 1996.

[85] Lyapunov, A.M, *General Problem about the Stability of Motion*, Gostekhizdat, Moscow, Russia, 1950.

[86] Macki J., Nistri P., Zecca P., Mathematical models for hysteresis, SIAM Review, 1993; 53:1:94-123.

[87] Macki J., Nistri P., Zecca P., Periodic oscillations in systems with hysteresis, Rocky Mount. J. of Math., 1992; 22:2:669-681.

[88] Macki J., Nistri P., Zecca P., A theoretical justification of the method of harmonic balance for systems with discontinuities, Rocky Mount. J. of Math., 1990; 20:4:1079-1097.

[89] Madan R., *Chua's Circuit:A Paradigm for Chaos*, Singapore: World Scientific, 1993.

[90] Mallet-Paret J., Chow S.-N., Pattern formation and spatial chaos in lattice dynamical systems - part II, IEEE Trans. CAS-I, 42:10:752-756, 1995.

[91] Mallet-Paret J., Smith H.L., The Poincáre-Bendixon theorem for monotone cyclic feedback systems, Journal of Dynamics and Differential Equations, 2:4:367-421, 1990.

[92] Manganaro G., Arena P., Fortuna L., *Cellular Neural Networks: Chaos, Complexity and VLSI Processing*, Springer Verlag, 1999.

[93] J. Mawhin, *Topological degree methods in nonlinear boundary value problems*, CBMS vol. 40, AMS, Providence, R.I., 1979

[94] Mayergoyz I.D., *The Preisach Model for Hysteresis*, Springer-Verlag, Berlin, New York, 1991.

[95] Mees A.I., Chua L.O., The Hopf bifurcation theorem and its applications to nonlinear oscillations in circuits and systems, IEEE Trans. Circuits and Systems, 1979; CAS-26:235-254.

[96] Mees A.I., *Dynamics of Feedback Systems*, London, England:Wiley, 1981.

[97] Michel A.N., Farrel J.A., Porod W., Qualitative analysis of neural networks, IEEE Trans. Circuits and Syst., 1989; CAS-36:229-243.

[98] Miller R.K., Michel A.N., Krenz G.S., On limit cycles of feedback systems which contain a hysteresis nonlinearity, SIAM J. Control and Optimization, 1986; 24:2:276-305.

[99] Narendra K.S., Taylor J.H., *Frequency Domain Criteria for Absolute Stability*, Academic, New York, 1973.

[100] Nicolis G., Prigogine I., *Self-organization in nonequilibrium systems*, Wiley, 1979.

[101] Perez-Munuzuri V. et. al., Nonlinear waves, patterns and spatio-temporal chaos in CNNs, Phil.Trans.R.Soc.Lond.A, 1995; 353:101-113.

[102] Preisach F., Über die magnetische Nachwirkung, Zeit.Phys., 1935; 94:277-302.

[103] Proceedings International Workshop CNN and their Appl., Budapest, Hungary, Dec. 1990.

[104] Proceedings International Workshop CNN and their Appl., Munich, Germany, Oct. 1992.

[105] Proceedings International Workshop CNN and their Appl., Rome, Italy, Dec. 1994.

[106] Proceedings International Workshop CNN and their Appl., Sevilla, Spain, June 1996.

[107] Procedings International Workshop CNN and their Appl., London, U.K., July 1998.

[108] Proceedings International Workshop CNN and their Appl., Catania, Italy, July 2000.

[109] Roska T., Computer-sensors: spatial-temporal computers for analog array signals, dynamically integrated with sensors, Journal of VLSI Signal Processing, Special issue: Spatiotemporal Signal Processing with Analogic CNN Visual Microprocessors, 23:221-238, Kluwer, 1999.

[110] Roska T., Chua L.O., Cellular neural networks with nonlinear and delay type template elements, Int.J.Circuit Theory and Appl., 1992; 20:469-481.

[111] Roska T., Chua L.O., The CNN universal machine, IEEE Trans. Circuits and Syst.-II, 1993; 40:163-173.

[112] Roska T., Chai W., Chua L., Stability of CNN with dominant nonlinear and delay-type templates, IEEE Trans. CAS-I, 1993; 40:4:270-272.

[113] Roska T., Chua L., Wolf D., Kozek T., Tetzlaff R., Puffer F., Simulating nonlinear waves and PDEs via CNN - Part I: Basic Techniques, Part II: Typical Examples, IEEE Trans. Circuit and Syst. - I, 1995; 42:10: 809-820.

[114] Roska T., Hámori J., Lábos E., Lotz K., Orzo L., Takács J., Venetianer P., Vidnyánszky Z., Zarándy A., The use of CNN models in the subcortical visual pathway, IEEE Trans. CAS,I:Fundamental Theory and Applications, 40:3:182-195, 1993.

[115] Roska T., Lotz K., Hámori J., Lábos E., Takács J., The CNN model in the visual pathway-Part I:The CNN-retina and some direction- and length-selective mechanisms, report DNS-8-1991, Computer and Automation Institute of the Hungarian Academy of Sciences, Budapest, 1990.

[116] Roska T., Rodríguez-Vázquez A., *Toward the Visual Microprocessor-VLSI Design and the Use of Cellular Neural Network (CNN) Universal Machine Computers*, London:J.Wiley, 2001.

[117] Roska T., Vandewalle J. (editor), *Cellular Neural Networks*, Wiley, John & Sons, Incorporated Pub., 1994.

[118] Roska T., Wu C.W., Chua L., Stability of Cellular Neural Networks with dominant nonlinear and delay-type templates, IEEE Trans. Curcuits Syst., 1993; 40:270-271.

[119] Roska T., Wu C.W., Balsi M., Chua L., Stability and dynamics of delay-type general cellular neural networks, IEEE Trans. Circuits and Syst., 1992; 39:487-490.

[120] Roska T., Zarándy Á, Zöld S., Földesy P., Szolgay P., The computational infrastructure of analogic CNN computing-Part I: The CNN-UM Chip prototyping system, IEEE Trans. CAS-I: Special issue on Bioinspired processors and cellular neural networks for vision, 46:2:261-268, 1999.

[121] Sandberg I.W., Willson A.N.,Jr., Existence and uniqueness of solutions for equations of nonlinear dc networks, SIAM J.Appl.Math., 1972; 22:173-186.

[122] Shi B.E., Spatio-temporal image filtering with Cellular Neural Networks, PhD Dissertation, Univ.of California ar Berkeley, Berkeley, 1994.

[123] Shi B.E., Chua L.O., Resistive gird image filtering:Input/output analysis via the CNN framework, IEEE Trans. Circuits and Syst.-I, 1992; 39: 531-548.

[124] Shi B., Roska T., Chua L.O., Design of linear cellular neural networks for motion sensitive filtering, IEEE Trans. Circuits andSyst.-II, 1993; 40:320-331.

[125] Slavova A., Dynamic properties of cellular neural networks, J. Appl. Math. and Stoch. Anal., 1993; 6:2:107-116.

[126] Slavova A., Periodic solutions of nonlinear dynamical system describing Cellular Neural Networks, Proc. of Neural, Parallel and Scientific Computations, Atlanta, GA, vol. 1, 1995, 431-433.

[127] Slavova, A., Cellular neural networks with nonlinear dynamics. J. Neural, Parallel, and Scientific Computations., 1995, 3:3:369-379.

[128] Slavova A., Stability analysis of CNN with hysteresis nonlinearity in the feedback system, Proc. CNNA96, Sevilla, Spain, 175-180, 1996.

[129] Slavova A., Neural Networks with Hysteresis, Proc. 15th IMACS, Wissenschaft und Technik Verlag, vol.4, 265-271, 1997

[130] Slavova A., Dynamic properties of Cellular Neural Networks with nonlinear output function, IEEE Trans. CAS-I, 1998; 45:5:

[131] Slavova A., Topological degree approach for studying nonlinear Cellular Neural Networks, Neural, Scient. and Parallel Comp.,1998; 6:267-279.

[132] Slavova A., Generalization of Neural Networks with Hysteresis Nonlinearity, Proc. IEEE, CNNA98, pp. 56-61, London, 1998.

[133] Slavova A., Stability Analysis of Nonlinear Cellular Neural Networks with Hysteresis in the Output Dynamics, Int. Journal on Applied Mechanics and Engin., 1998; 3:2:305-322.

[134] Slavova A., Stability Analysis of General Neural Networks, Invited Lectures 7th Coll. on Diff. Eq., Plovdiv 96, Academic Publishers, 1997, 147-155.

[135] Slavova A.,Toda Lattice and Lotka Volterra Cellular Neural Networks Models. J.on Neural, Parallel and Scientific Comp., 1999; 7:417-428.

[136] Slavova A., Zecca P., CNN model for studying FitzHugh-Nagumo equation, Comp.R.Bulg.Acad.Sci., 2000; 52:6:31-34.

[137] Slavova A., Zecca P., CNN model for studying dynamics and travelling wave solutions of FitzHugh-Nagumo equation, Journal of Computational and Applied Mathematics, 2002 (in print).

[138] Slavova A., Applications of some mathematical methods in the analysis of Cellular Neural Networks, J. on Comput. Appl. Math., 2000; 114:387-404.

[139] Slavova A., Stability analysis of cellular neural networks with nonlinear dynamics, Nonlinear Analysis, Series B: Real World Appl., 2001; 2;93- 103.

[140] Slavova A., Modeling nonlinear waves and PDEs via Cellular Neural Networks, Annali di Ferrara, Sez. VII,Vol. XLV, 1999; 311-326.

[141] Slavova A., CNN model for hyperbolic equations with hysteresis, IEEE Proc. CNNA2000, Italy, 2000, 259-264.

[142] Slavova A., CNN model for Sine-Gordon equation, Proc. Conf. on Bioinform. and biomath., Alanya, 1999, 206-215.

[143] Smith H.L., Monotone semiflows generated by functional differential equations, J.Diff.Eq., 1987; 66:120-442.

[144] Special issue on CNN, Int.J. Circuit Theory and Appl., vol. 20, Sept. 1992.

[145] Special issue on Chaos, IEEE Trans.CAS-I, vol. 42, 1995.

[146] Thiran P., *Dynamics and Self-organization of Locally Coupled Neural Networks*, Presses Polytechniques et Universitaires Romandes, 1997.

[147] Thompson J.M.T., Stewart H.B., *Nonlinear Dynamics and Chaos*, New York:Wiley, 1986.

[148] Toda M.,*Theory of Nonlinear Lattices*, New York:Springer-Verlag, 1981.

[149] Toda M., Nonlinear lattice and soliton theory, IEEE Trans. CAS, 1983; 30:542-554.

[150] Tricomi F.G., *Integral Equations*, Dover Publications, Inc., New York, 1985

[151] Vasil'eva A.B., Tikhonov N., *Integral Equations*, Moscow, 1991

[152] Vidyasagar M., *Nonlinear System Analysis*, Englewood Cliffs, NJ: Prentice Hall, 1978.

[153] Visintin, A., *Models of Hysteresis*, Springer, 1993.

[154] Visintin A., *Differential Models of Hysteresis*, Springer-Verlag, 1994.

[155] White J.L., Abidi A.A., Active resistor networks as 2-D sampled data filters, IEEE Trans. Circuits and Syst.-I, 1992; 39:724-733.

[156] Whitham G.B., *Linear and Nonlinear Waves*, John Wiley, 1974.

[157] Willson A.N., Jr., New theorems on the equations of nonlinear dc transistor networks, Bell Syst. Tech.J., 1970; 49:1713-1738.

[158] Wu F.F., Existence of an operating point for a nonlinear circuit using the degree of mapping, IEEE Trans. Circuits and Syst., 1974; CAS-21:671-677.

[159] Yao Y., Freeman W.J., Model of biological pattern recognition with spatially chaotic dynamics, Neural Networks, 1990; 3:153-170.

[160] Zou F., Nossek J., "Hopf-like bifurcation in cellular neural networks, Proc. 1993 IEEE ISCAS, Chicago, IL, 1993, 2391-2394.

[161] Zou F., Nossek J., Bifurcation and chaos in CNN, IEEE Trans. CAS-I, 1993; 40:5:166-171.

[162] Zou F., Nossek J., A chaotic attractor with CNN, IEEE Trans. CAS-I, 1991; 38:811-812.

Index

absolute global stability 39
absolute stability analysis 34
active medium 2
Alladin 3
amplitude 108
array 5
-circular 134, 144
asymptotic stability 100
-global 39
attractor
-double scroll 110
-strange 113
autonomous CNN 45,100

bifurcation 110
-diagram 27
- Hopf 100
-Poincaré-Andronov-Hopf 101
boundary conditions
- fixed (Dirichlet) 15
- periodic 15
-zero-flux (Neumann) 15
boundary value dependence 172

casuality property 181
cell 5
-dynamics 6,14,130,139
-equilibrium state 64
center manifold theorem 21
chaos 110
chaotic behaviour 110
characteristic 26,30,32
circuit 6
CNN 4
-circular 109
-definition 5,6
-delay 12,13,49,74
-dynamics 12
-general 33
-hyperbolic 106
-linear 4
-multilayer 10,11
-multiple neighbourhood size 7,9
-nonlinear 49,50
-non-uniform processor 7,8
-stability 20
-typical 4
-universal mashine 3
completely stable 23,56,74
continuity property 171
control
-discrete-continuous 113
convergence 20
convolution operator 13
current source 5

degree
-topological 169
describing function method

106,190
differential equation
-ordinary 18,31,89,110
-partial 1,119
diffusion coefficients 120
distortion 193
double scroll attractor 110
dynamic range 18
dynamical system 5

eigenvalue 30
energy function 22
equation
-Brusselator 155
-Burgers 121
-Fisher 149
-FitzHugh-Nagumo 138
-heat 120
-input 54
-Laplace 121
-Lotka-Volterra 167
-output 16,17,54
-Sine-Gordon 129
-state 12, 53
-Toda lattice 160
equilibrium point 192
-asymptotic stable 64
-hyperbolic 64
-isolated 69
-stable system 32,65,99
-structurally stable 69
-unstable 64
equilibrium solution 87

feedback 5
focus 48

Fourier transform
-continuous time discrete 131
-continuous time
discrete space 131
-discrete space 195
-double 140
-expansion 142
frequency
-spatial 131
-temporal 131
function
-Heaviside 81
-nonlinear 17
-sigmoid 16
-transfer 132
functional 107

general CNN 33
grid 1

harmonic balance principle 190
homotopy invariance 171
Hopf bifurcation theorem 46,47
Hopfield neural networks 50
hyperbolic CNN 106
hysteresis 28,85
-active 178,180
-Duhem 183
-Ishlinskii 185
-operator 106,181
-Preisach 186
-relay 178,179
hysteresis loop 28
hysteron
-Krasnosel'skii-Pokrovskii 187

image processing 2
index 68
initial condition 4,144
input 12,17
integro-differential equation 61
invariance
-space 3,5

Jacobian matrix 30,135

layer 10,11
limit cycle
-predicted 193
linear 4,5
Lipschitz condition 24
Lur'e diagram 141, 191
Lur'e system 201
Lyapunov function 22
Lyapunov majorizing
equation 35,92,96
Lyapunov stability theorem 89

majorants
-Lyapunov 36
map 45
matrix
-Jacobian 30
-memory-based 86
-symmetric 22,56,74,75
memory
-operator 106
mode
-steady state 63
-transient 63
model
-CNN 106, 128, 138, 149,
155,160,167
-FitzHugh nerve
impulse transmition 81
modelling 119
monotone
-decreasing 22
-increasing 61
monotonicity property 183

nearest neighbourhood 29,59
nerve 81
neural network 19,27
neuron 50,52

orbit
-periodic 101
operator
-Laplacian 120
oscillator
-Chua 139
output 4,5

pattern 1,2
pattern recognition 2
period 108
periodic solution 91,133
piecewise-linear function 16
Poincaré-Bendixon theorem 21
population 167
positive 30,32

rate independence 177
rate independent property 181

reaction-diffusion equation 120
reaction-diffusion CNN 120,138
region
-hysteresis 88
-nonlinear 71
-partial stability 72,88
-stability 71,88
regulator
-discrete-continuous 114
regulazing effect 109
relative error 122
resistor 4,5

semigroup property 182
sigmoid function 16
solution
-classical 136
space
-Euclidean 30,88
spatial discretization 107
stability 20
-complete 22
-structural 67
state
-stable cell equilibrium 65
-steady 20
subspace
-stability 30
-hystersis 30
synaptic law 6,15,130

template
-cloning 6,12
-control 23
-feedback 23
-Laplacain 121
-nonlinear 14,53
-opposite sign 45
-space invariant 76
-symmetric 14
time 6,41,42
topological degree method 66,169
trajectory 22,45,74
transient 22
travelling wave solution 148

unstable 64,100

VLSI implementation 2
voltage 4

wave
-solitary 144,164
-travelling 145