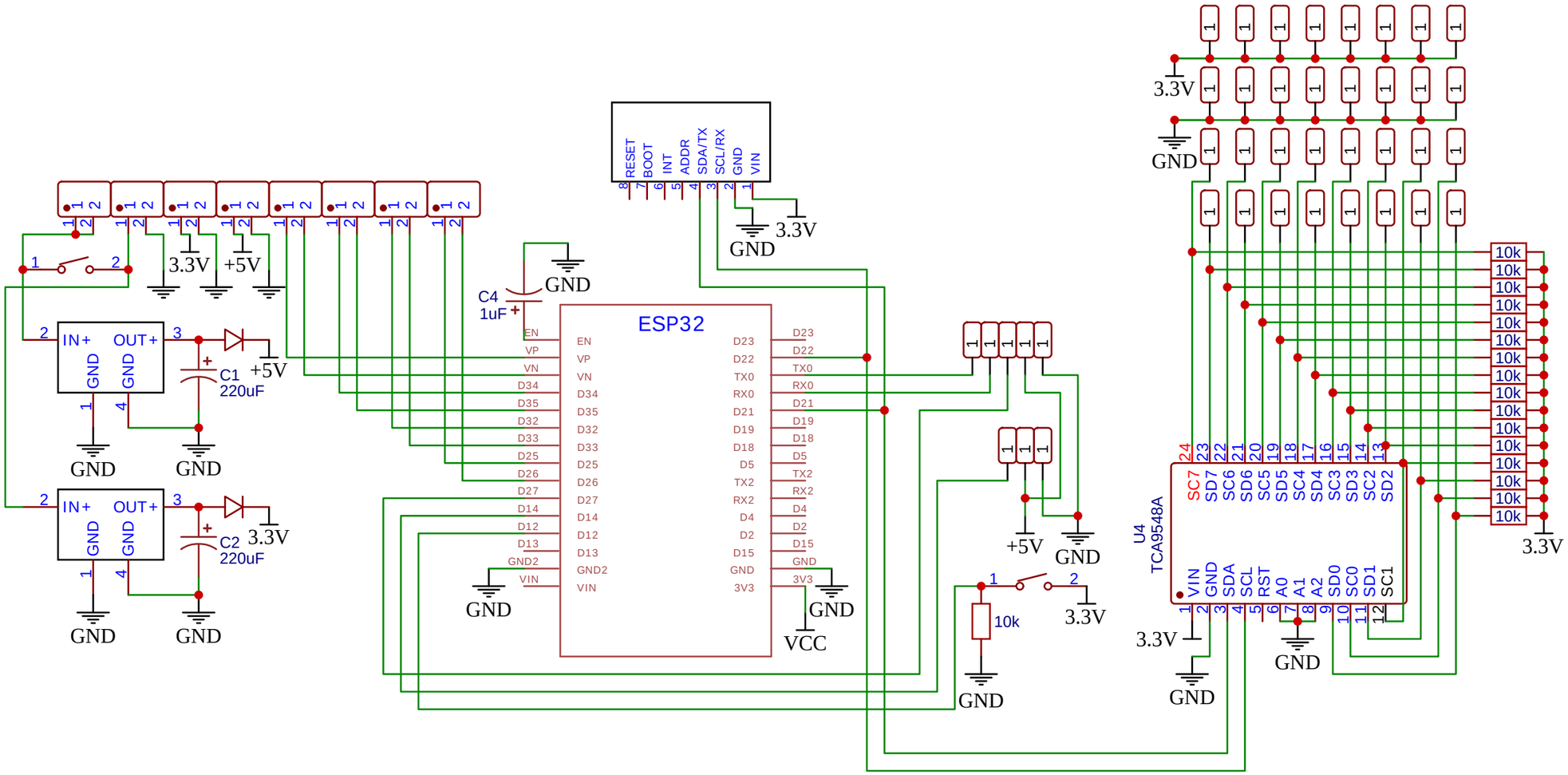

TITLE: Motherboard		REV: 1.0
EasyEDA	Company: Fran Robots	Sheet: 1/1
	Date: 2024-05-06 Drawn By: Arthur Mendes	