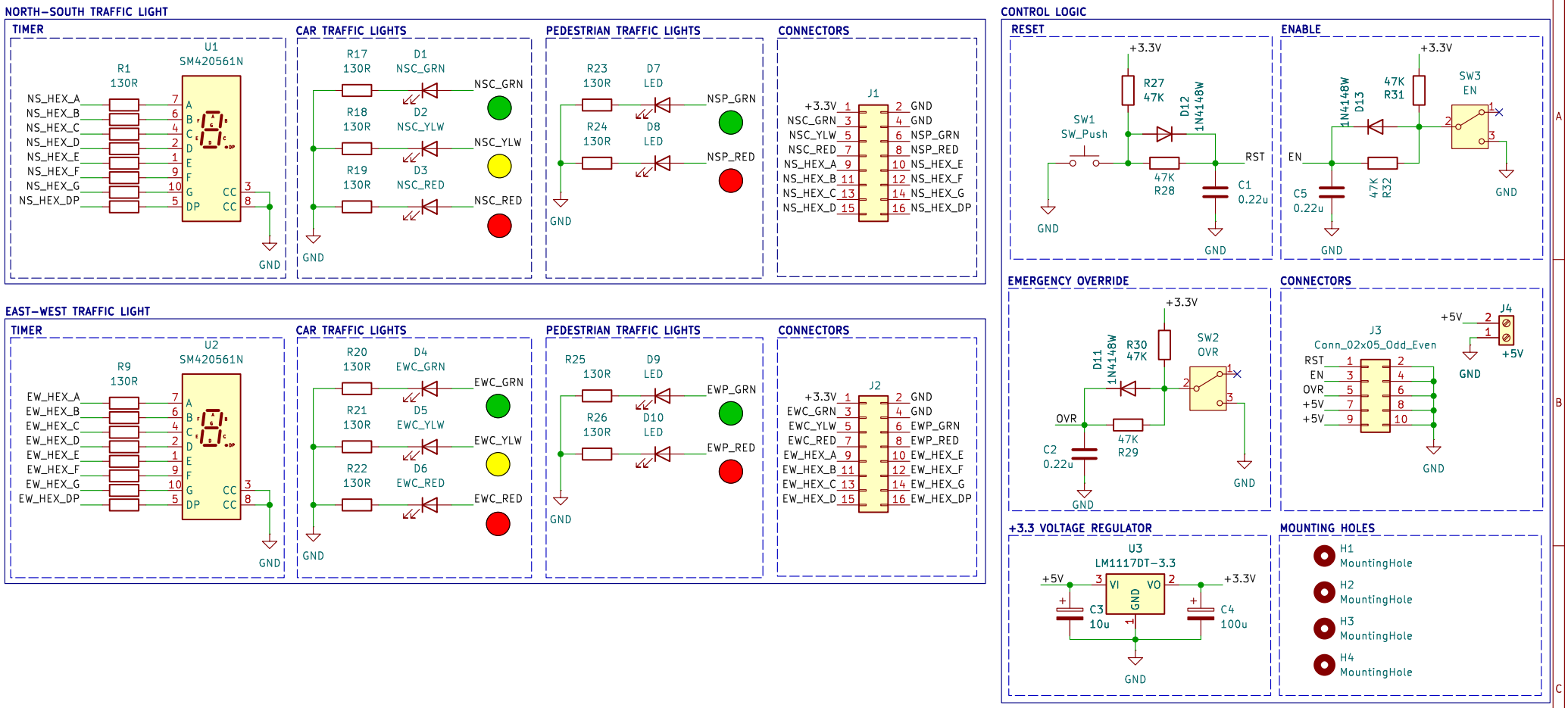

Franz Louis G. Vigilar
Computer Engineering Technlogy

Sheet: /
File: Traffic_Light_Controller_guide.kicad_sch

Title: TRAFFIC LIGHT CONTROLLER

Size: A4	Date: 2026-04-17	Rev:
KiCad E.D.A. 9.0.3		Id: 1/1