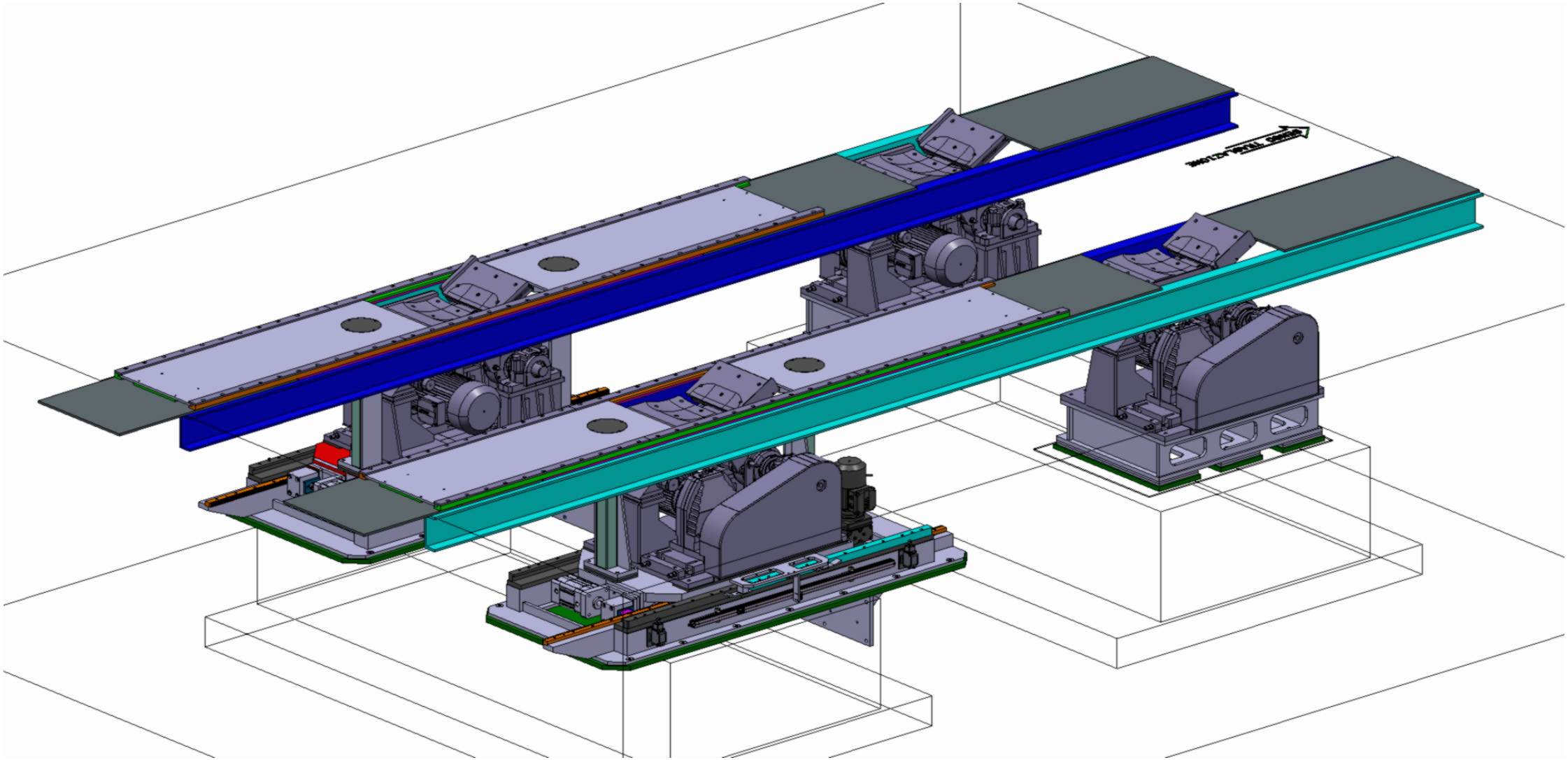
MOTOR ROLL CHAIN