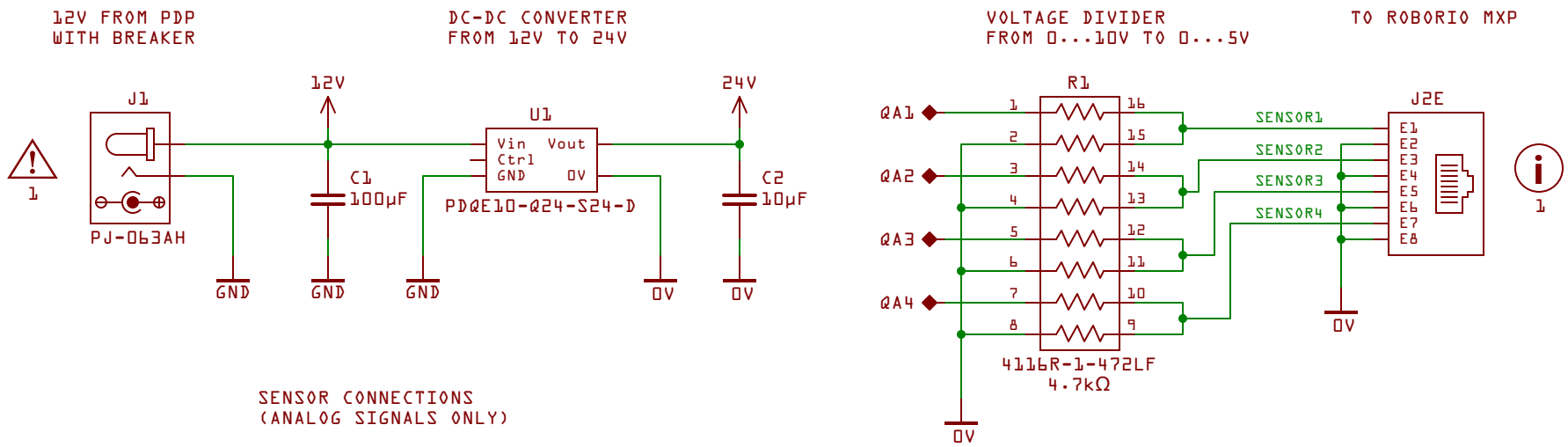

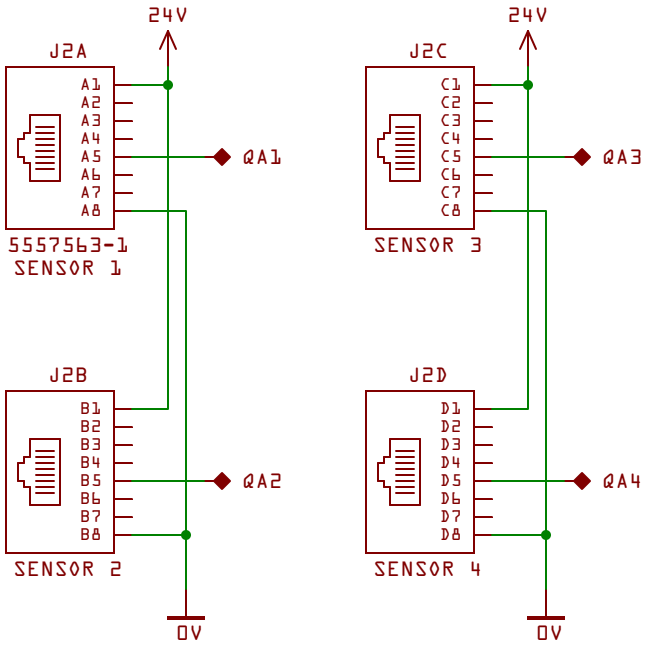

TABLE 1. CABLE ASSEMBLY

M12 5-PIN END			RJ45 END	
PIN	NAME	COLOUR	PLUG	JACK
1	+Ub	Brown	1	1
2	Qa/Out	White	5	5
3	-Ub/0V	Blue	8	8
4	PNP/NPN	Black	4	NC
5	IN/COM	Grey	6	NC

WARNINGS

1 - From PDP, wire RED to center barrel pin, and black to outer shield.

INFORMATION

1 - To roboRIO use a standard pass-through ethernet cable.

FRC BALLUFF SENSOR ADAPTER		
REV: A	DATE: 20190207	SHEET: 1/1
DRAWING: N. SANCHEZ		Dronedas