REVISION NOTES
==========
Rev 1: Initial Design
Rev 2: PCB rounded to fit inside bearing
Rev 3: Locating pins changed to 3mm.
Board cut under SL connector.
Rev 4: Add OR gate to disable outputs
when mag field is weak.
Increase green led brightness.

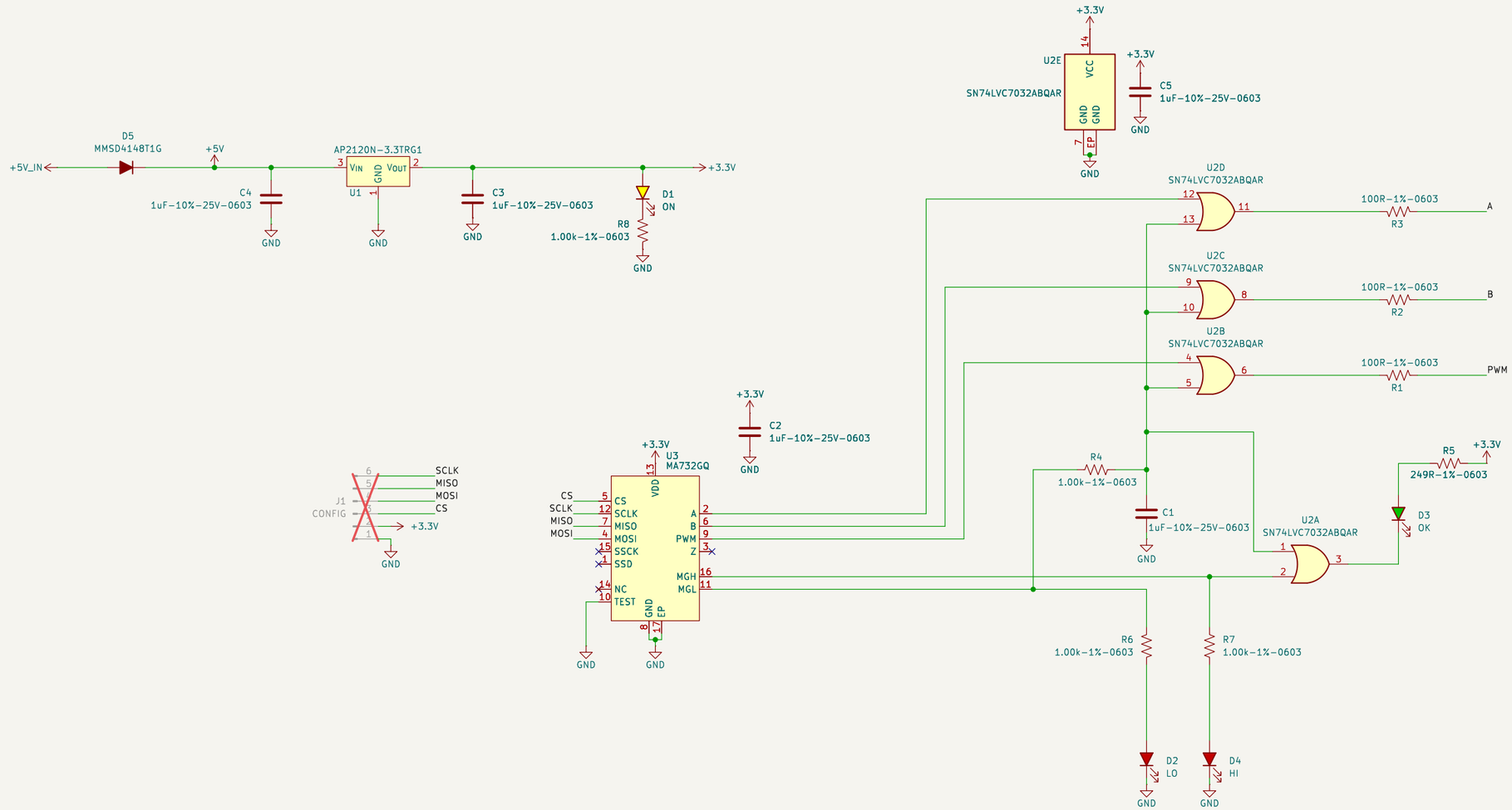

971 SPARTAN ROBOTICS

Sheet: /
File: mag-encoder.kicad_sch

Title: Mag Encoder

Size: B	Date: 2024-12-03	Rev: 4
KiCad E.D.A. 8.0.6		Page: 1/1