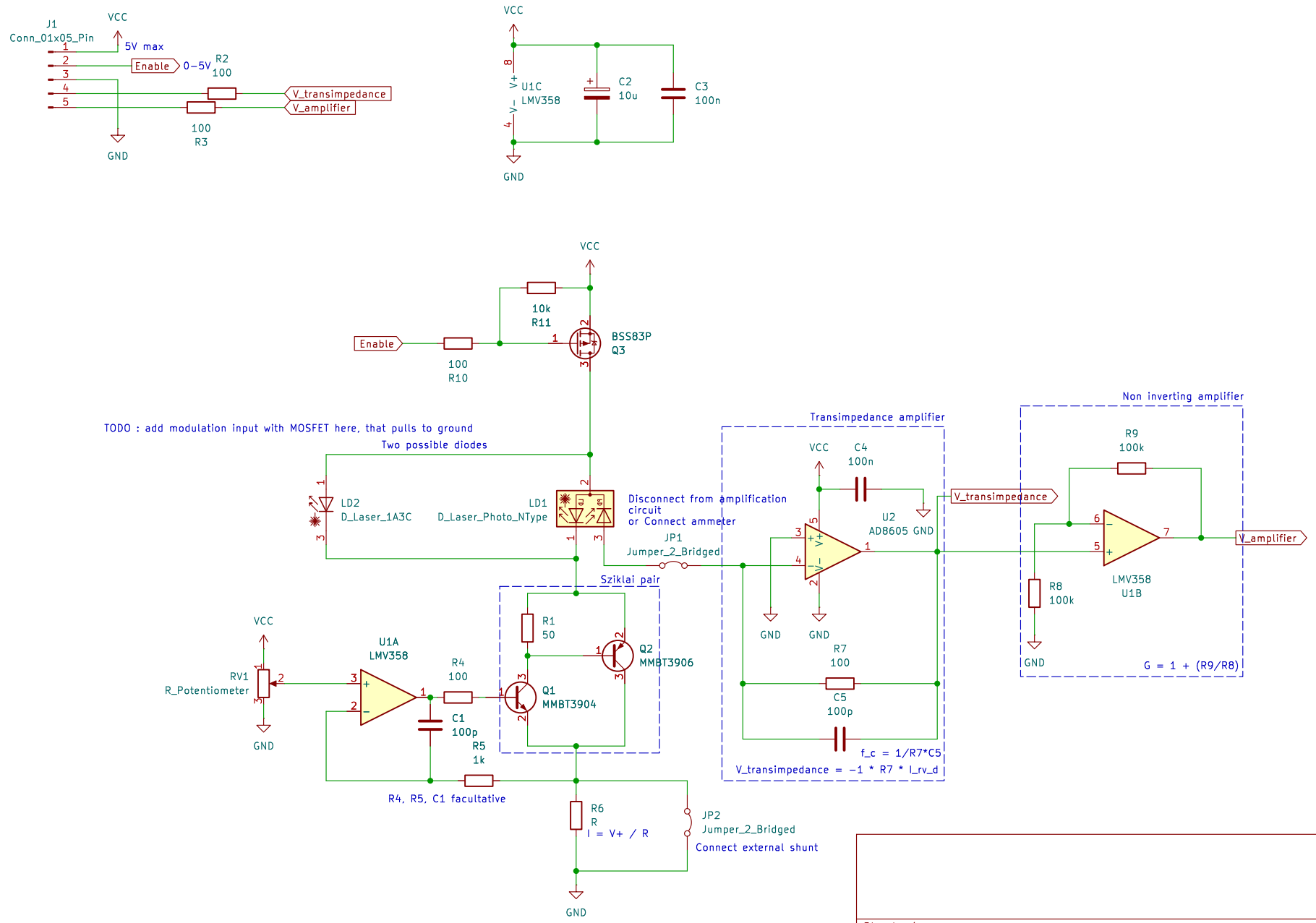

Sheet: /
File: mini-laser-driver.kicad_sch

Title: Mini laser driver

Size: A4	Date: 2025-02-06	Rev: A00
KiCad E.D.A. 8.0.8		Id: 1/1