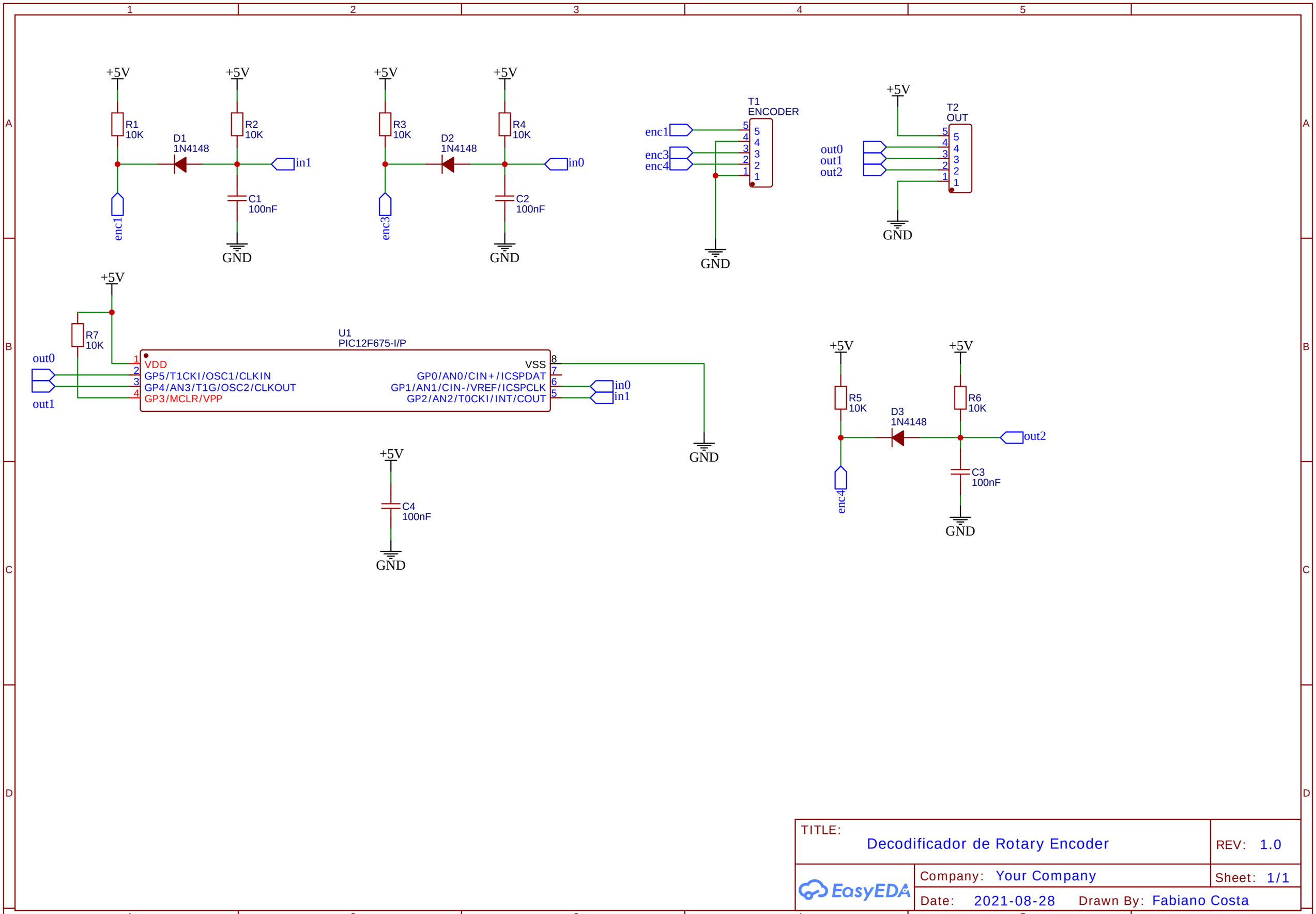

TITLE: Decodificador de Rotary Encoder		REV: 1.0
EasyEDA	Company: Your Company	Sheet: 1/1
	Date: 2021-08-28 Drawn By: Fabiano Costa	