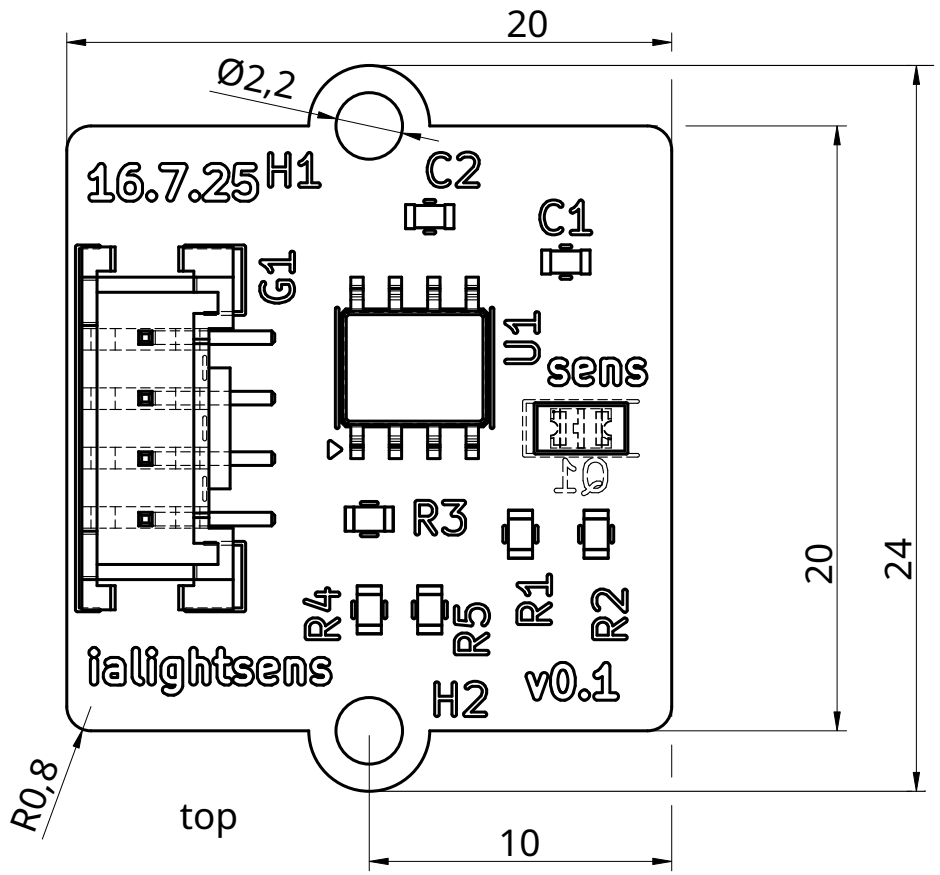

top

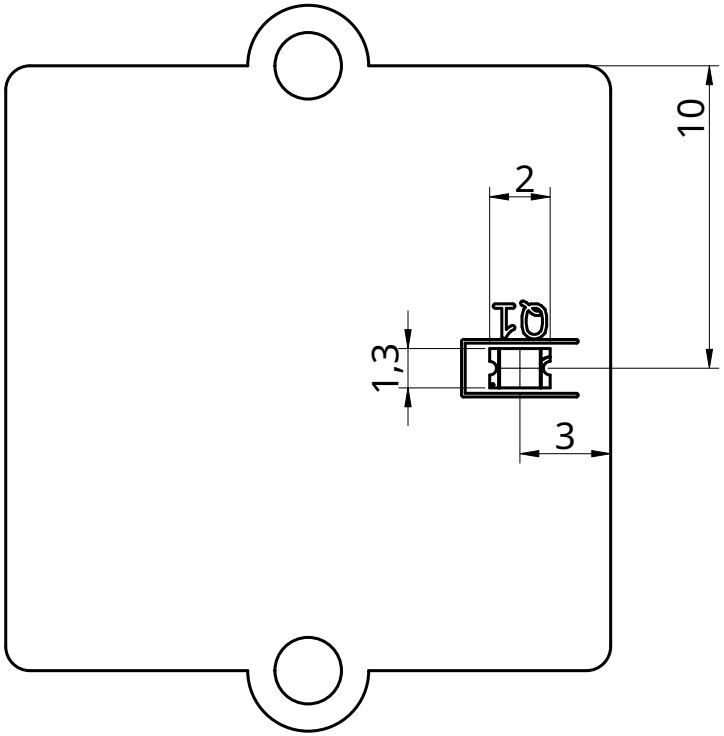

bottom

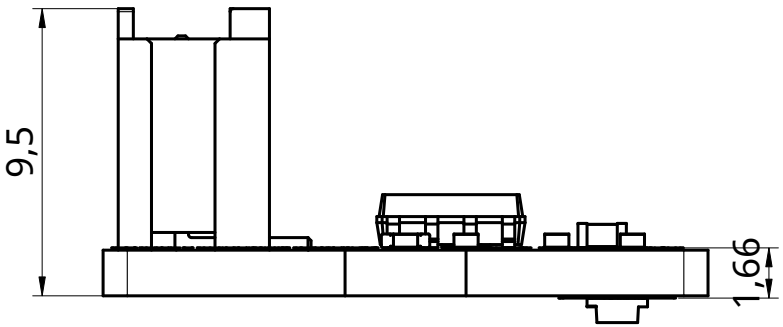

		NAME	SIGNATURE	DATE
UNLESS OTHERWISE SPECIFIED, DIMENSIONS ARE IN MILLIMETERS	DRAWN	FRIEDRICH BECKMANN		2025-09-22
ANGULAR = ± °	CHECKED			
SURFACE FINISH	APPROVED			
DO NOT SCALE DRAWING				
BREAK ALL SHARP EDGES AND REMOVE BURRS				
FIRST ANGLE PROJECTION	MATERIAL		FINISH	

TITLE: ialightsens v0.1

SIZE	DWG NO.	REV.
A4		0.1

SCALE	WEIGHT	SHEET
4:1		1 of 1