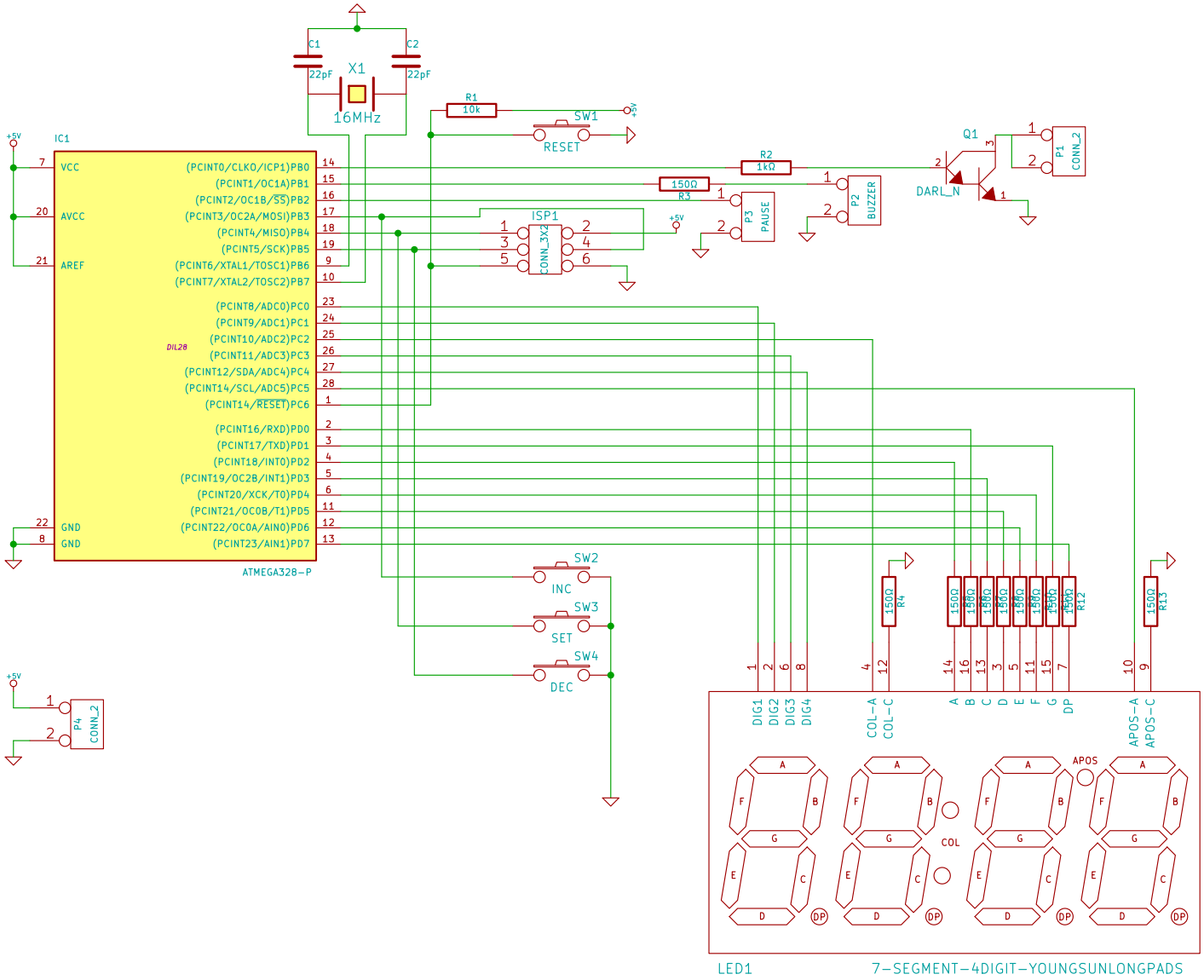

Fredrik Rambris		
File: Timer.sch		
Sheet: /		
Title: Timer		
Size: A4	Date: 25 dec 2013	Rev: 2
KiCad E.D.A.		Id: 1/1