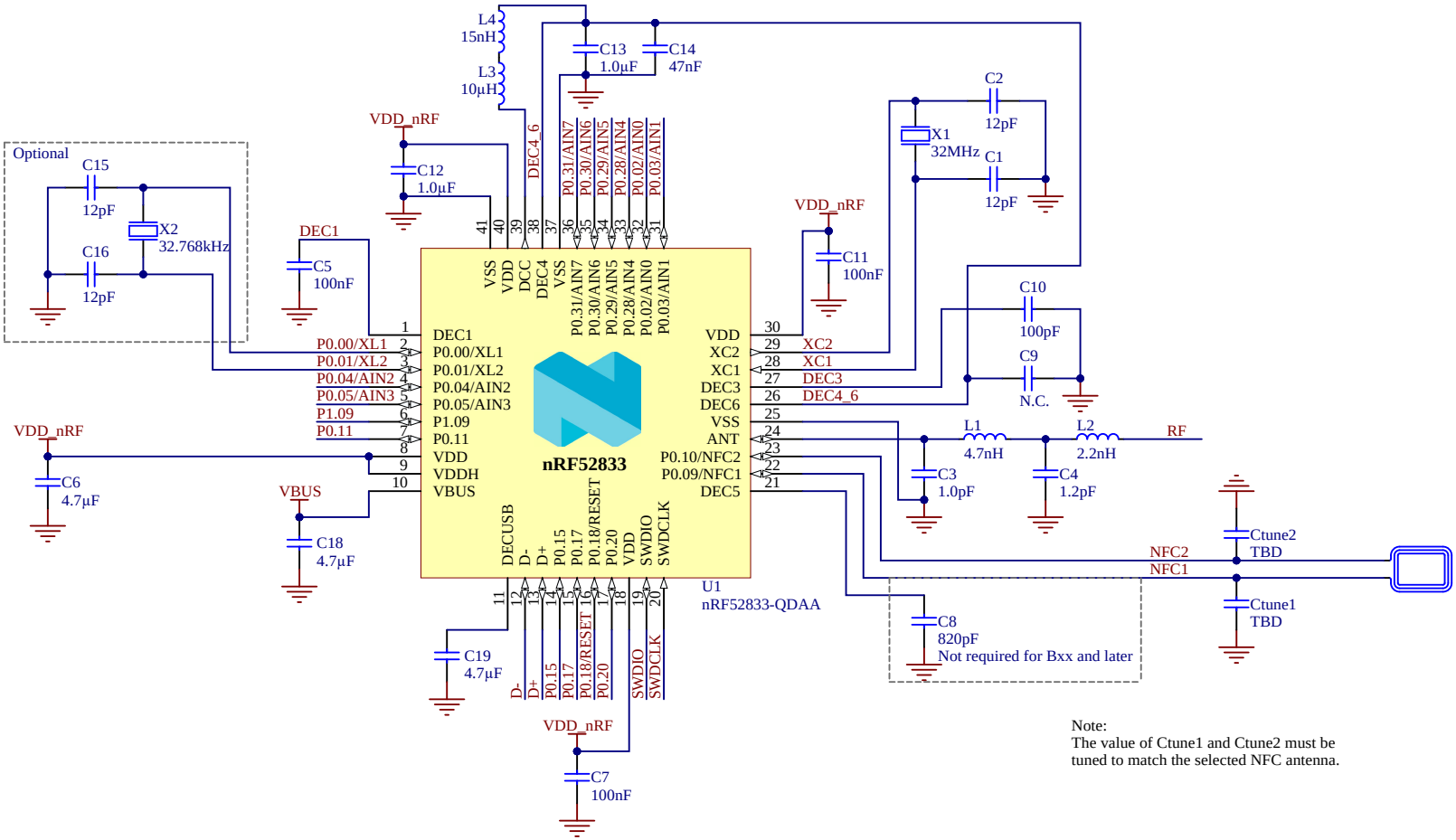

Note:
The value of Ctune1 and Ctune2 must be tuned to match the selected NFC antenna.

Title: nRF52833-QDAA Ref. Layout (DCDC, VDD supply, NFC)		NORDIC SEMICONDUCTOR
Size: A4	Project Number	Revision: 1.1
Date: 26.05.2021		Sheet 1 of 1
File: nrf52833_qdaa_var5.SchDoc		Drawn By: RUBR