This document and all information and data herein or herewith are confedencial and propriertary property of<COMPANY NAME> and are not to be used, reproduced or disclosed in whole or in part by anyone without the written permission of<COMPANY NAME>

Tolerances exept where noted:
ISO 2768-1 (c), ISO 2768-2 (K) & ISO 13920 BF

REV.	Cable attachment V3	INI	INI	06.03.2023/FR.

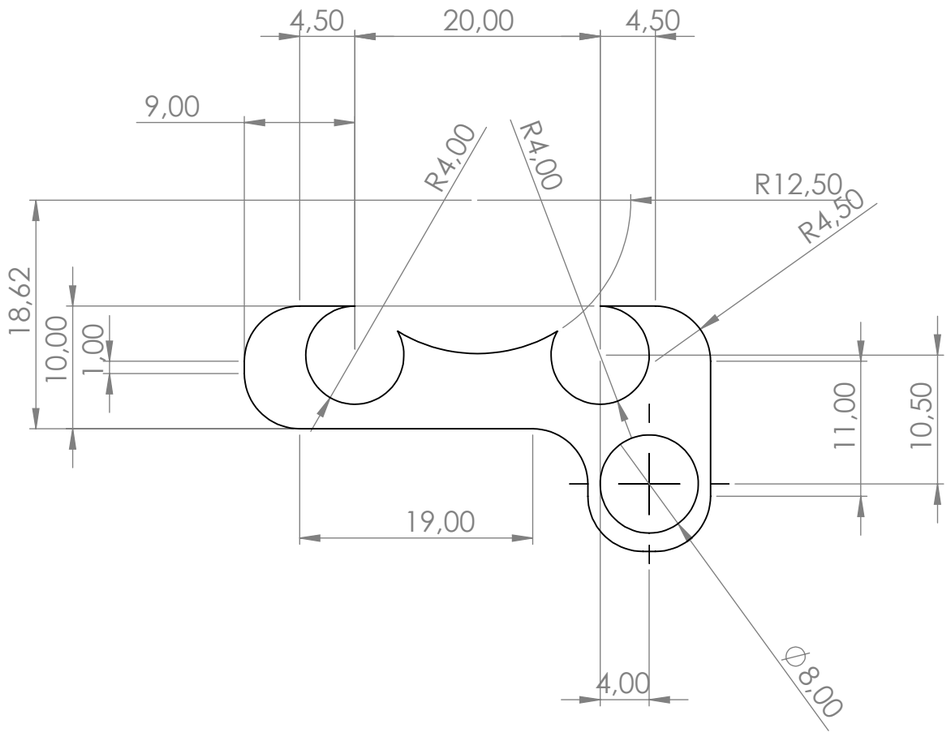

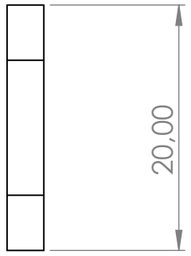

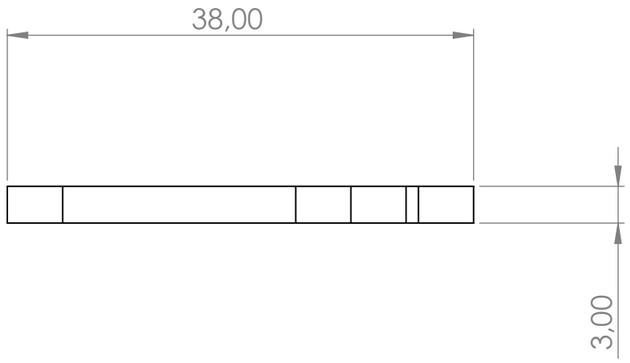

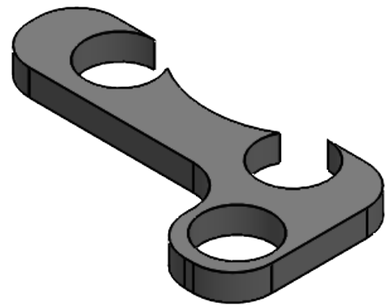

All measurements are in mm U.N.O.
Deburr & remove all sharp edges.

Projection:

DO NOT SCALE DRAWING

REVISION: V3

Universitetet i Agder

	NAME	SIGNATURE	DATE
DRAWN	Fredrik Rylander		06.03.23
CHK'D			
APPV'D			
Q.A			

FINISH: 3D Print
REPLACES:
REPLACED BY:

TITLE:
Cable attachment

Spesification:
ONYX

DWG NO.
Cabel holder

A3

WEIGHT: 0.00KG

SCALE:2:1

SHEET 1 OF 1

SOLIDWORKS Educational Product. For Instructional Use Only.