This document and all information and data herein or herewith are confedencial and propriertary property of<COMPANY NAME>
and are not to be used, reproduced or disclosed in whole or in part by anyone without the written permission of<COMPANY NAME>

Tolerances exept where noted:
ISO 2768-1 (c), ISO 2768-2 (K) & ISO 13920 BF

REV.	FIRST REVISION	INI	INI	DATE/SIGN.

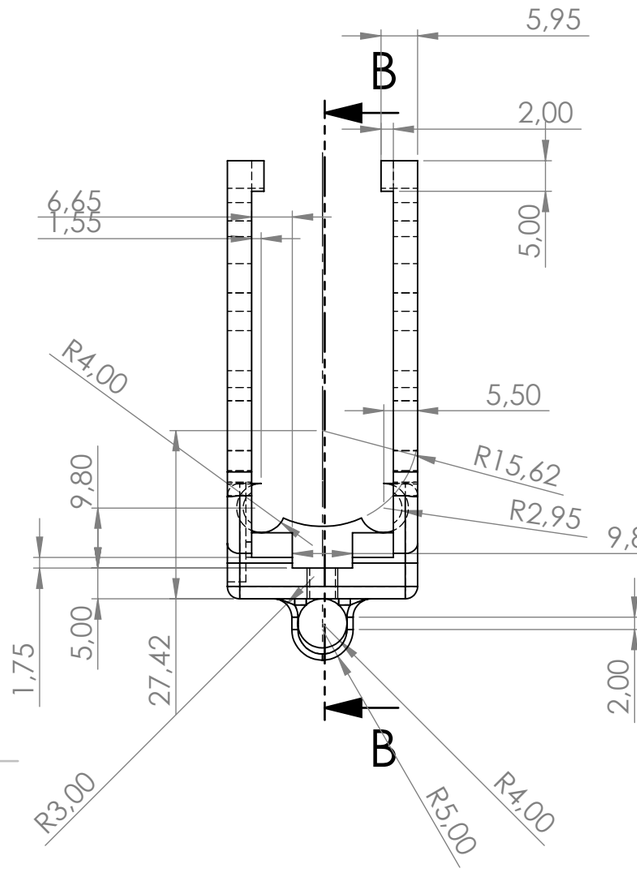

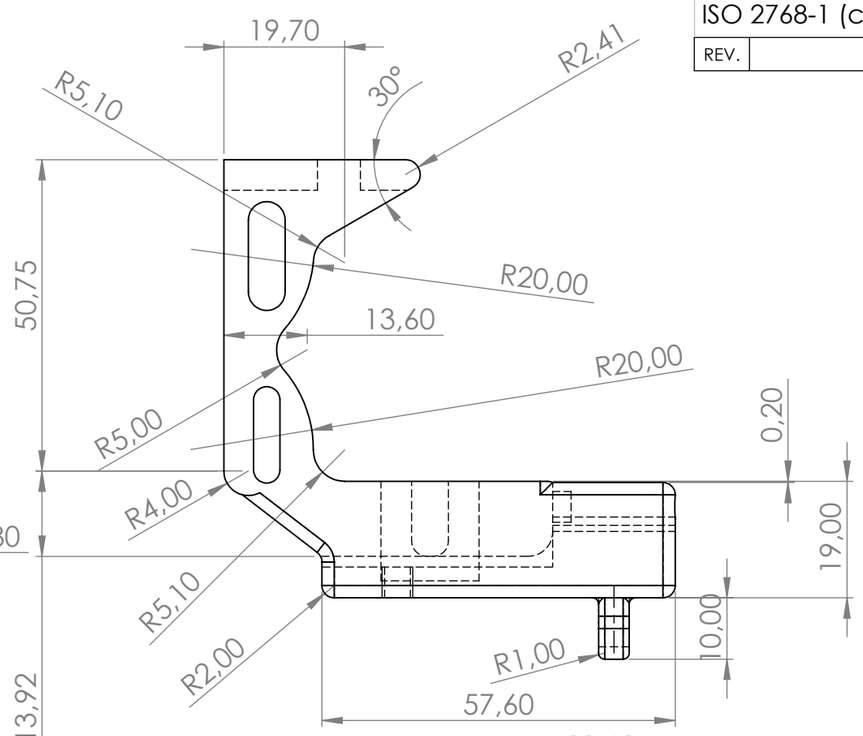

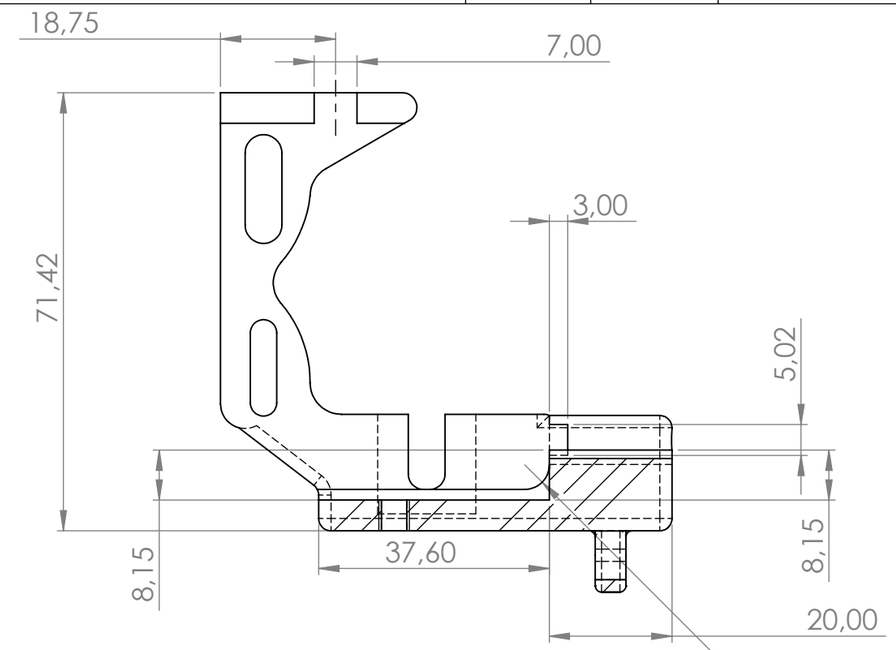

SECTION B-B

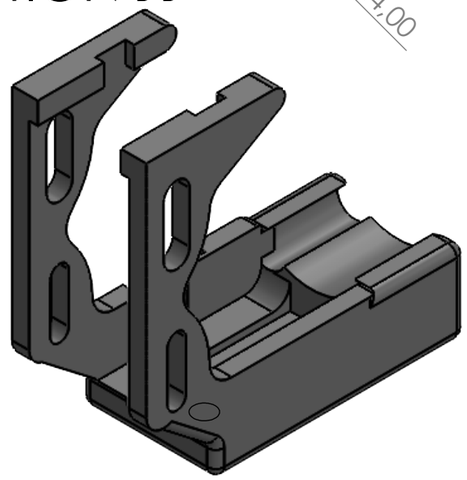

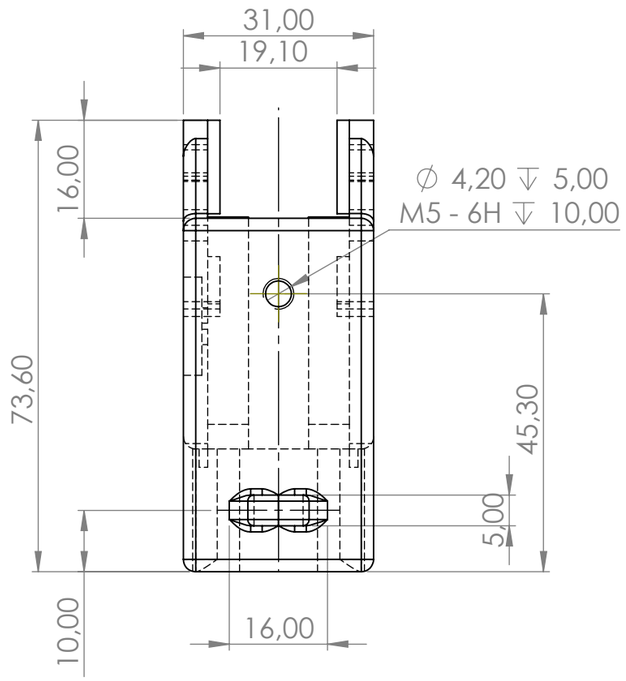

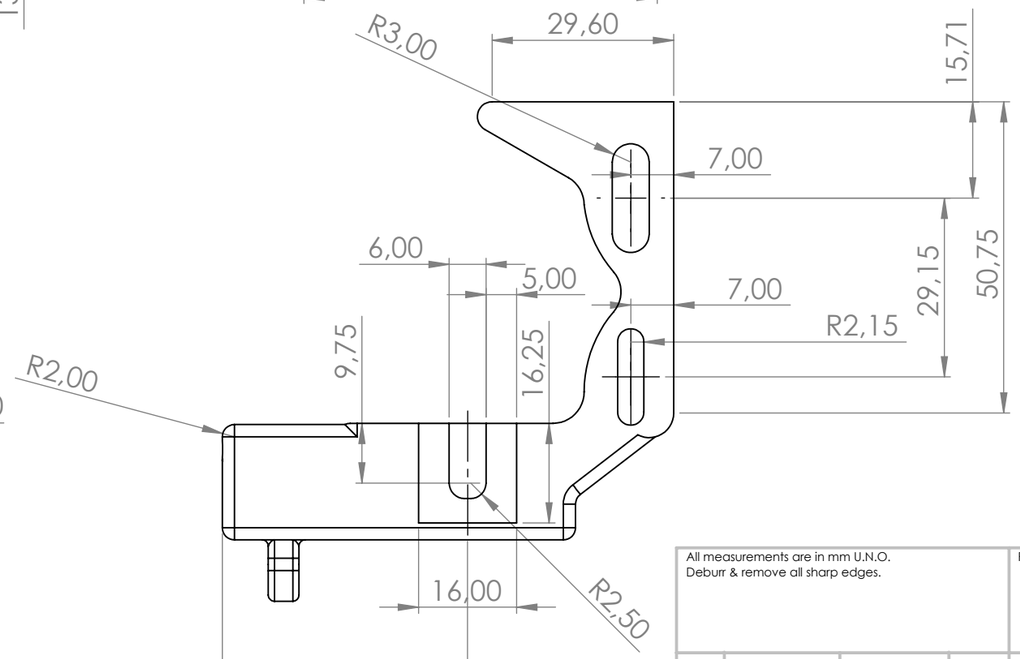

All measurements are in mm U.N.O.
Deburr & remove all sharp edges.

Projection:

DO NOT SCALE DRAWING | REVISION: V1

Universitetet i Agder

	NAME	SIGNATURE	DATE
DRAWN	Fredrik Rylander		14.03.2023
CHK'D			
APPV'D			
Q.A			

FINISH: 3D print
REPLACES:
REPLACED BY:

TITLE:
Sensor holder V1

Spesification: ONYX

DWG NO.
Balluff sensor holder

A3

WEIGHT: 0.03KG | SCALE:1:1 | SHEET 1 OF 1

SOLIDWORKS Educational Product. For Instructional Use Only.