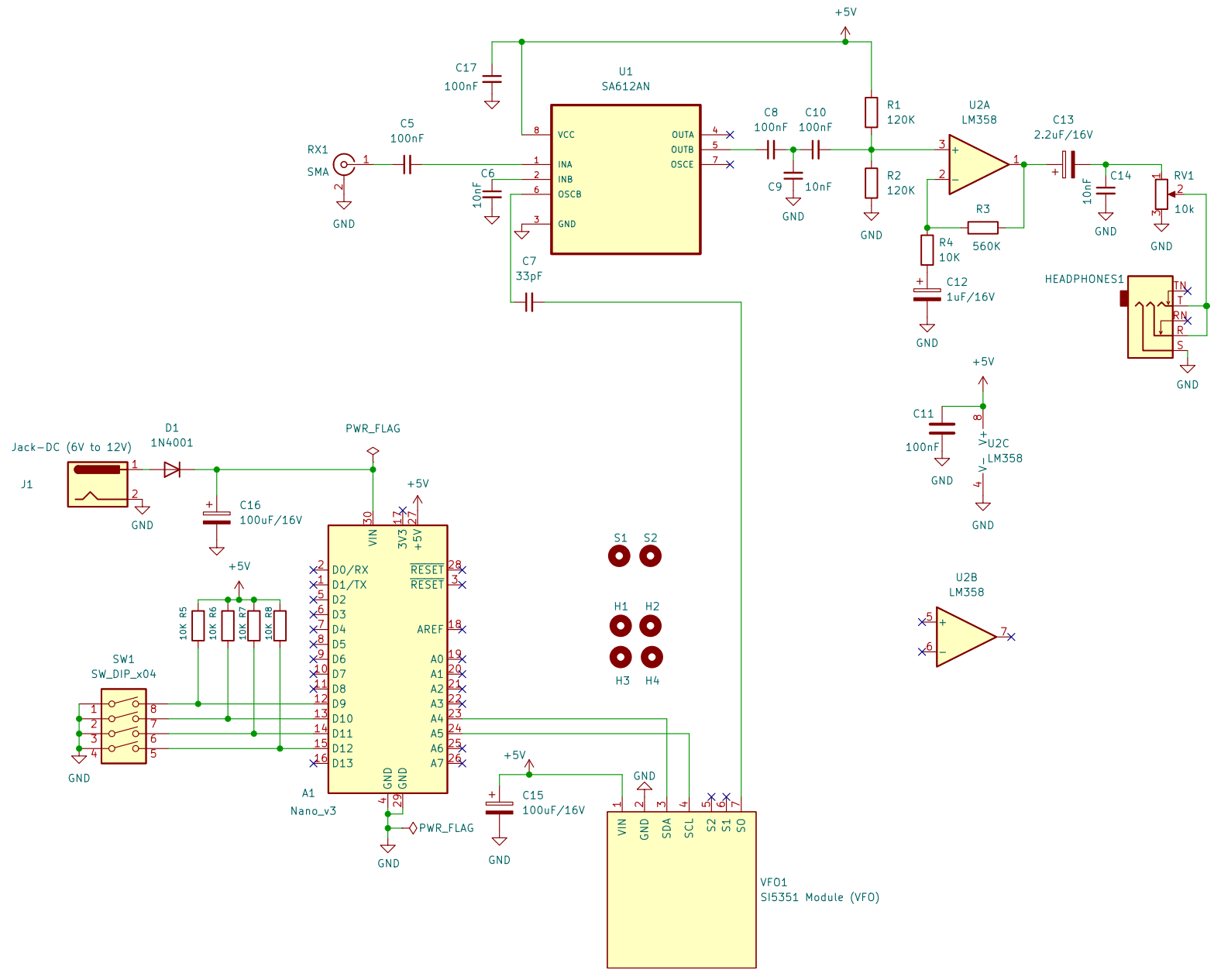

HF Direct Conversion RX for Digital Modes

Dhiru Kholia (VU3CER)

Sheet: /

File: DCR.kicad_sch

Title: Poorman's HF RX by WB2CBA

Size: User	Date: 2022-03-25	**Rev: V0.01**
KiCad E.D.A. eeschema 6.0.4-6f826c9f35~116~ubuntu21.10.1		Id: 1/1