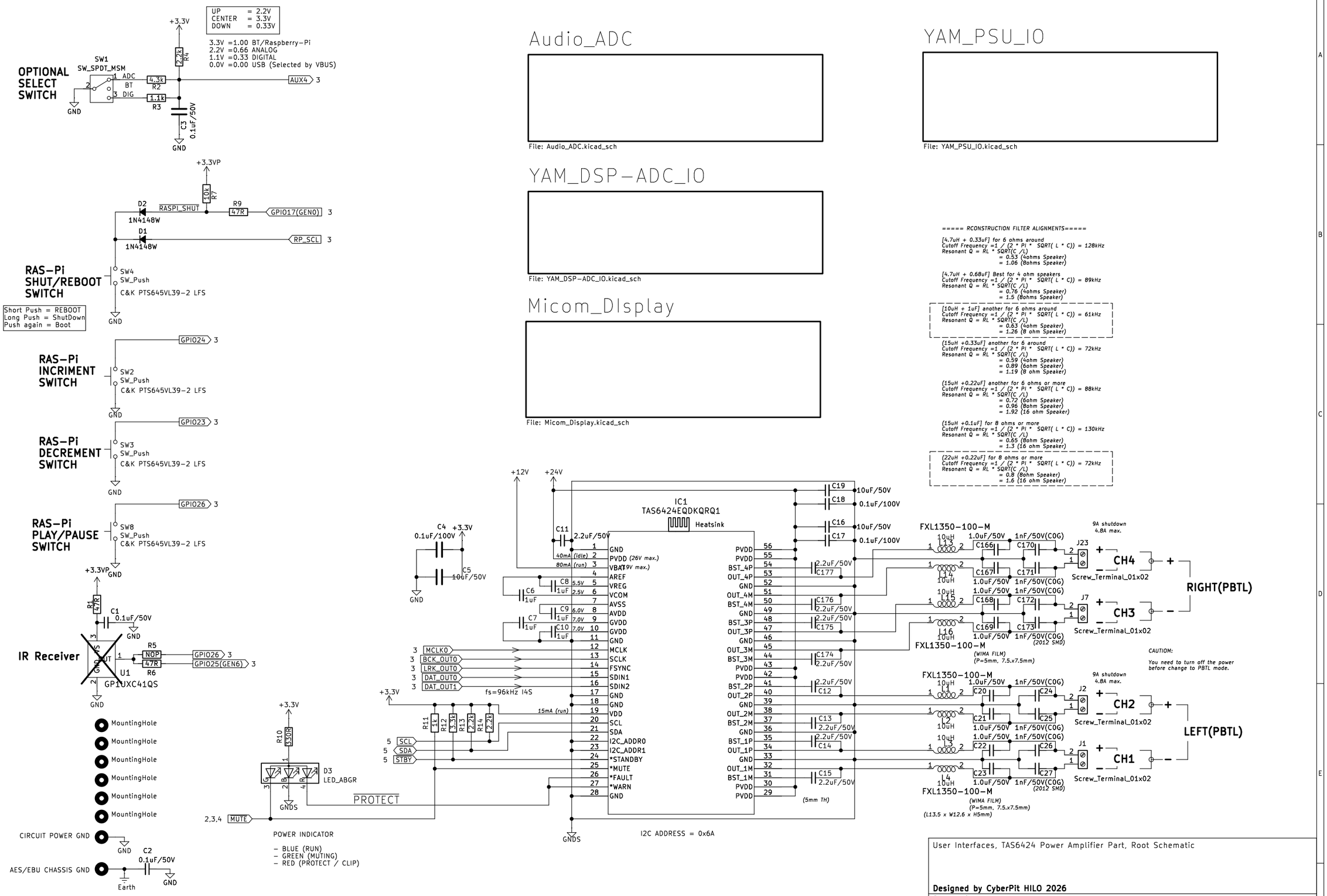

User Interfaces, TAS6424 Power Amplifier Part, Root Schematic

Designed by CyberPit HILO 2026

Sheet: /
File: FreeDSP_INTEGRA_QUAD-PRO.kicad_sch

Title: TAS6422 FreeDSP INTEGRA QUAD PRO

Size: A3	Date: 2026-02-07	**Rev: 0.4**
KiCad E.D.A. 9.0.7		Id: 1/5

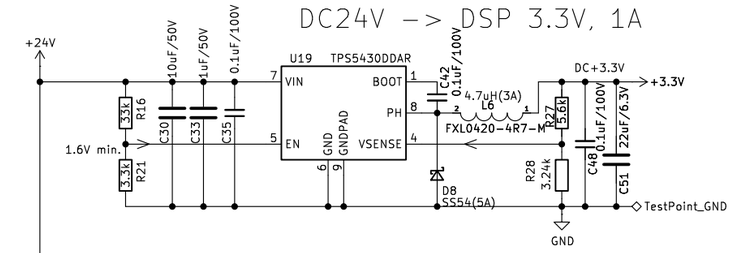

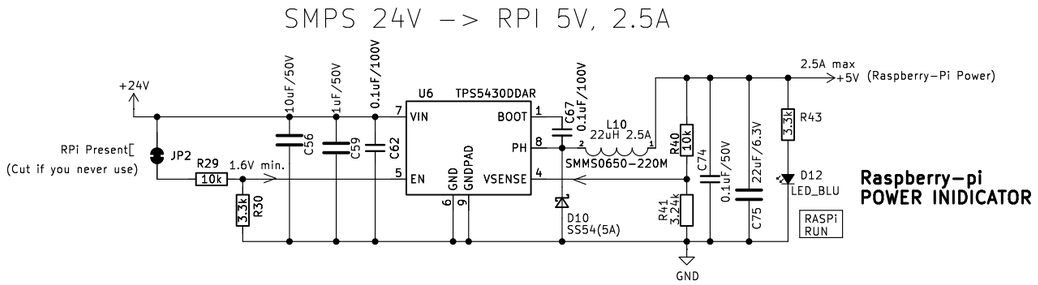

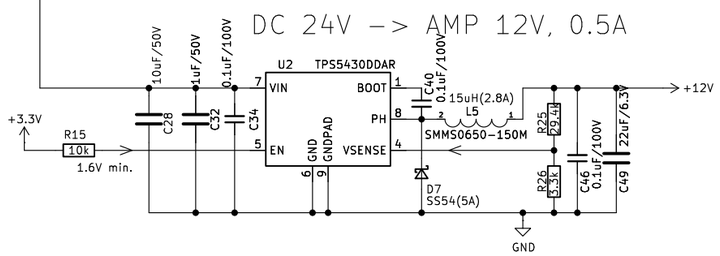

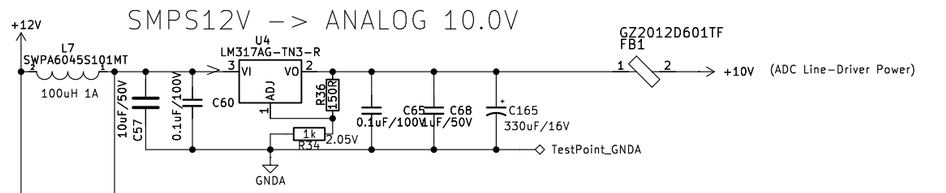

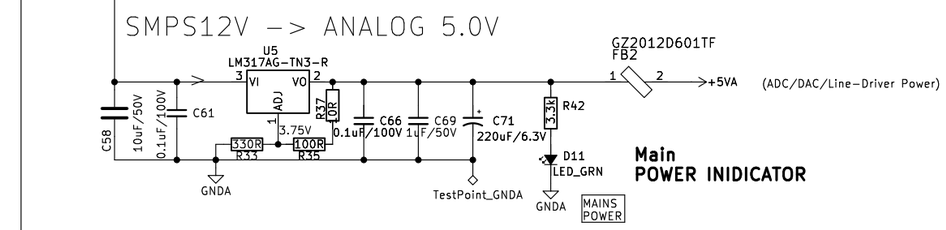

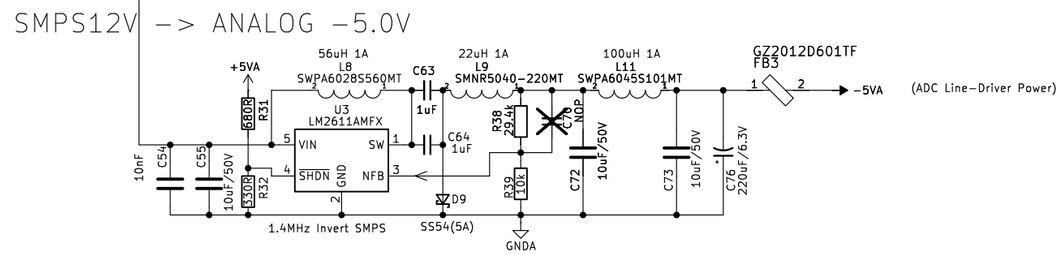

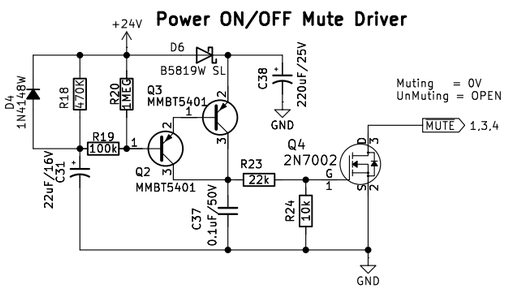

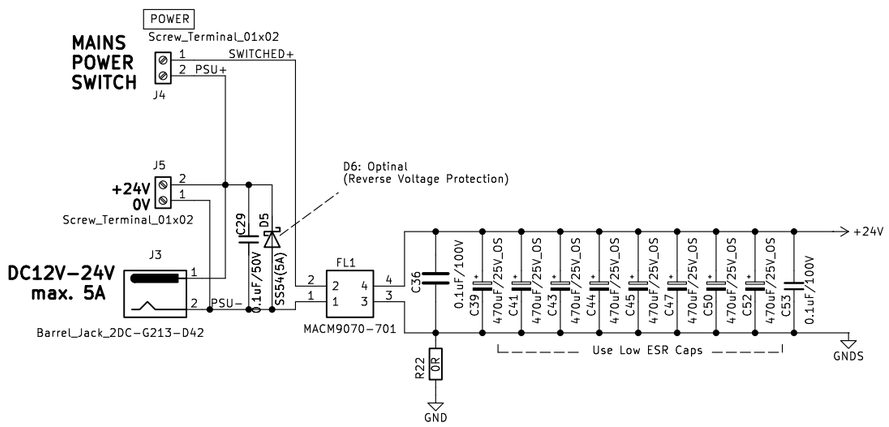

Power Supply Unit part

Designed by CyberPit HILO 2026

Sheet: /YAM_PSU_IO/
File: YAM_PSU_IO.kicad_sch

Title: TAS6422 FreeDSP INTEGRA QUAD PRO

Size: A3	Date: 2026-02-07	**Rev: 0.4**
KiCad E.D.A. 9.0.7		Id: 2/5

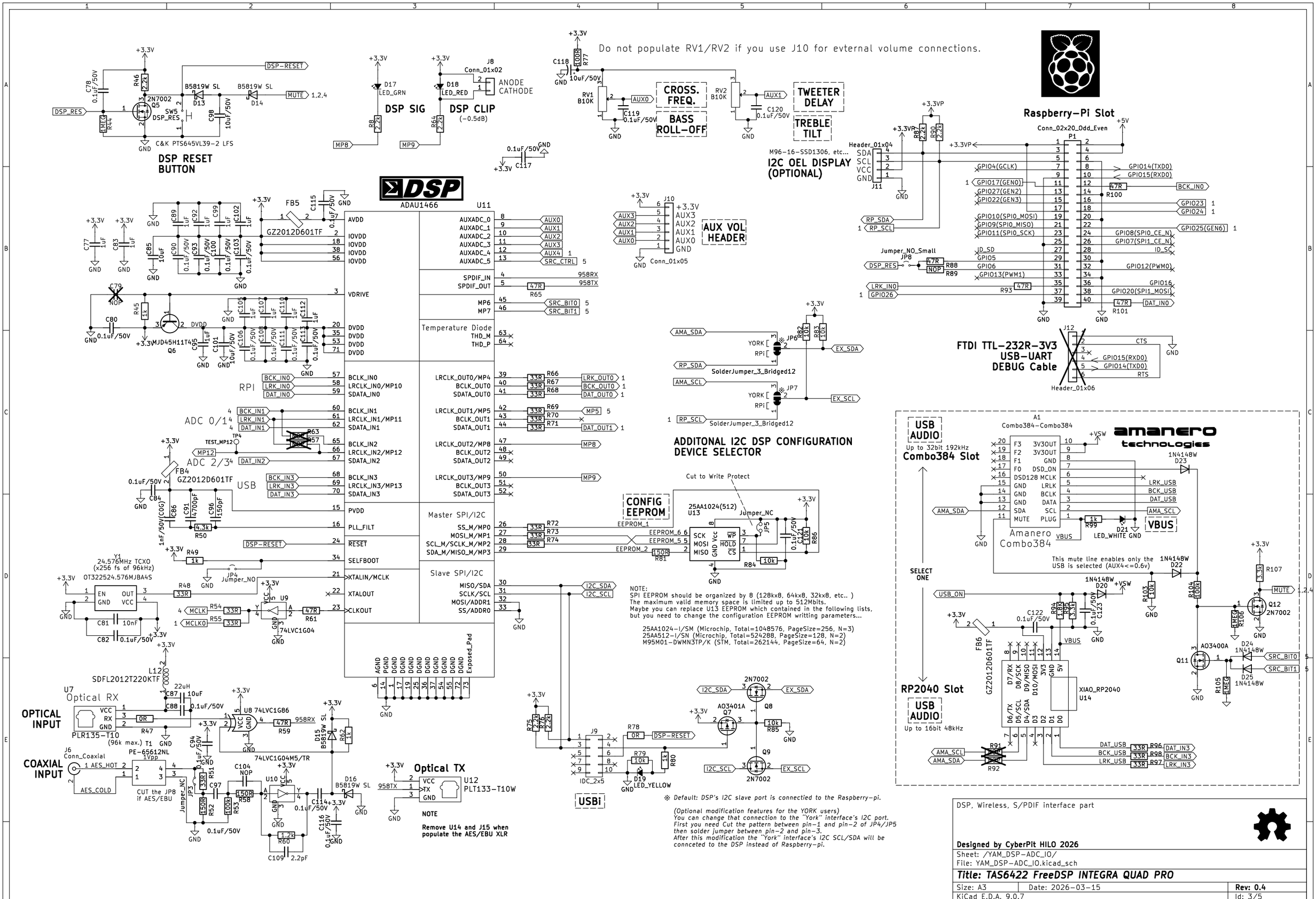
DSP RESET BUTTON
C&K PTS645VL39-2 LFS
DSP-RESET
MUTE 1,2,4
DSP SIG
DSP CLIP (-0.5dB)
ANODE CATHODE
Do not populate RV1/RV2 if you use J10 for evternal volume connections.
CROSS. FREQ.
BASS ROLL-OFF
TWEETER DELAY
TREBLE TILT
I2C OEL DISPLAY (OPTIONAL)
M96-16-SSD1306, etc...
Raspberry-Pi Slot
Conn_02x20_Odd_Even
ADAU1466
AUX VOL HEADER
FTDI TTL-232R-3V3 USB-UART DEBUG Cable
ADDITONAL I2C DSP CONFIGURATION DEVICE SELECTOR
CONFIG EEPROM
25AA1024(512)
Cut to Write Protect
NOTE:
SPI EEPROM should be organized by 8 (128kx8, 64kx8, 32kx8, etc..)
The maximum valid memory space is limited up to 512Mbits.
Maybe you can replace U13 EEPROM which contained in the following lists, but you need to change the configuration EEPROM writting parameters...
25AA1024-I/SM (Microchip, Total=1048576, PageSize=256, N=3)
25AA512-I/SN (Microchip, Total=524288, PageSize=128, N=2)
M95M01-DWMN3TP/K (STM, Total=262144, PageSize=64, N=2)
USB AUDIO
Up to 32bit 192kHz
Combo384 Slot
Amanero Combo384
amanero technologies
SELECT ONE
RP2040 Slot
USB AUDIO
Up to 16bit 48kHz
XIAO_RP2040
This mute line enables only the USB is selected (AUX4<=0.6v)
OPTICAL INPUT
PLR135-T10
(96k max.)
COAXIAL INPUT
CUT the JP8 if AES/EBU
Optical TX
PLT133-T10W
NOTE
Remove U14 and J15 when populate the AES/EBU XLR
USBi
※ Default: DSP's I2C slave port is connectied to the Raspberry-pi.
(Optional modification features for the YORK users)
You can change that connection to the "York" interface's I2C port.
First you need Cut the pattern between pin-1 and pin-2 of JP4/JP5 then solder jumper between pin-2 and pin-3.
After this modification the "York" interface's I2C SCL/SDA will be connceted to the DSP instead of Raspberry-pi.
DSP, Wireless, S/PDIF interface part
Designed by CyberPit HILO 2026
Sheet: /YAM_DSP-ADC_IO/
File: YAM_DSP-ADC_IO.kicad_sch
Title: TAS6422 FreeDSP INTEGRA QUAD PRO
Size: A3
Date: 2026-03-15
Rev: 0.4
KiCad E.D.A. 9.0.7
Id: 3/5

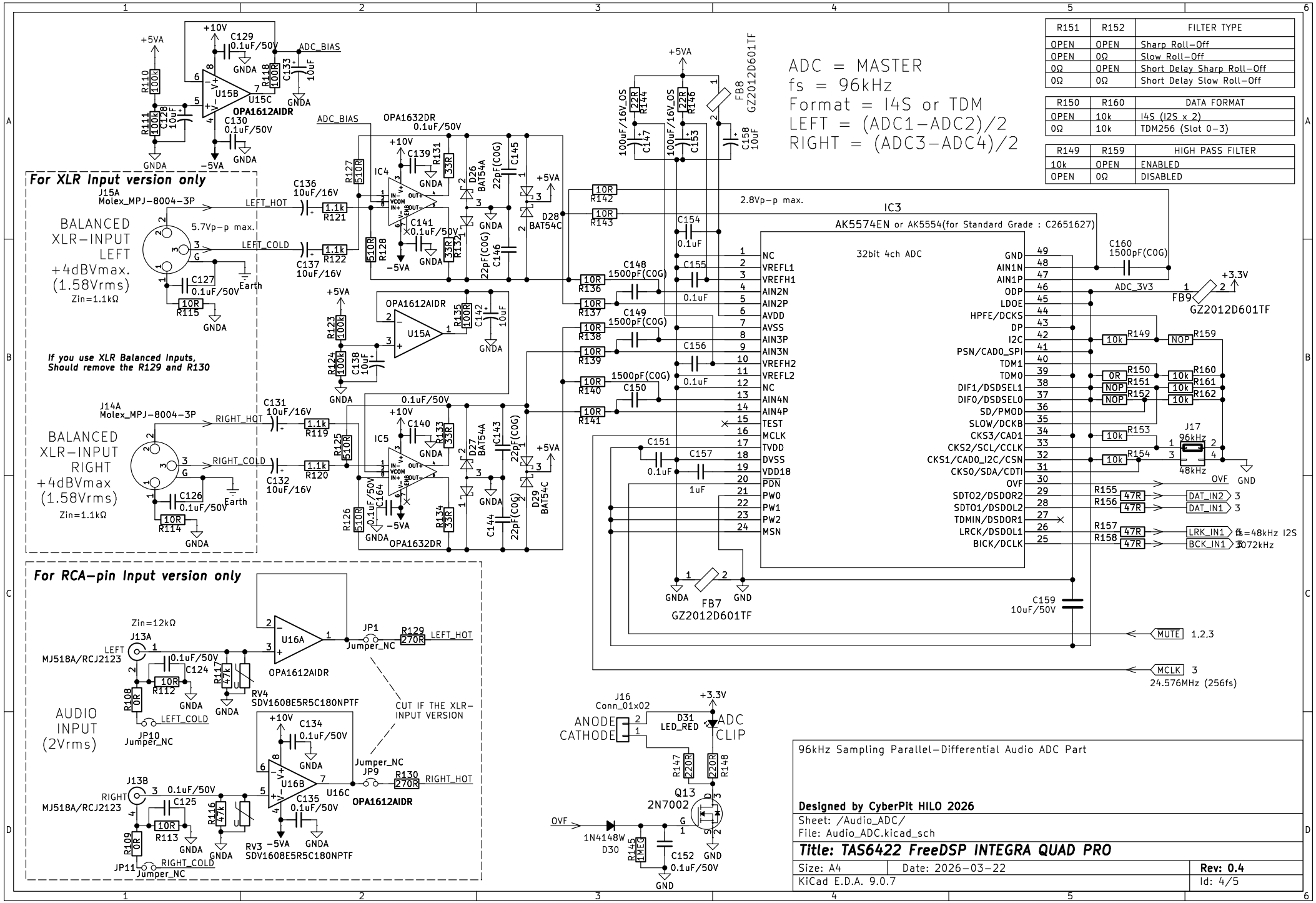

R151	R152	FILTER TYPE
OPEN	OPEN	Sharp Roll−Off
OPEN	0Ω	Slow Roll−Off
0Ω	OPEN	Short Delay Sharp Roll−Off
0Ω	0Ω	Short Delay Slow Roll−Off

R150	R160	DATA FORMAT
OPEN	10k	I4S (I2S x 2)
0Ω	10k	TDM256 (Slot 0−3)

R149	R159	HIGH PASS FILTER
10k	OPEN	ENABLED
OPEN	0Ω	DISABLED

96kHz Sampling Parallel−Differential Audio ADC Part

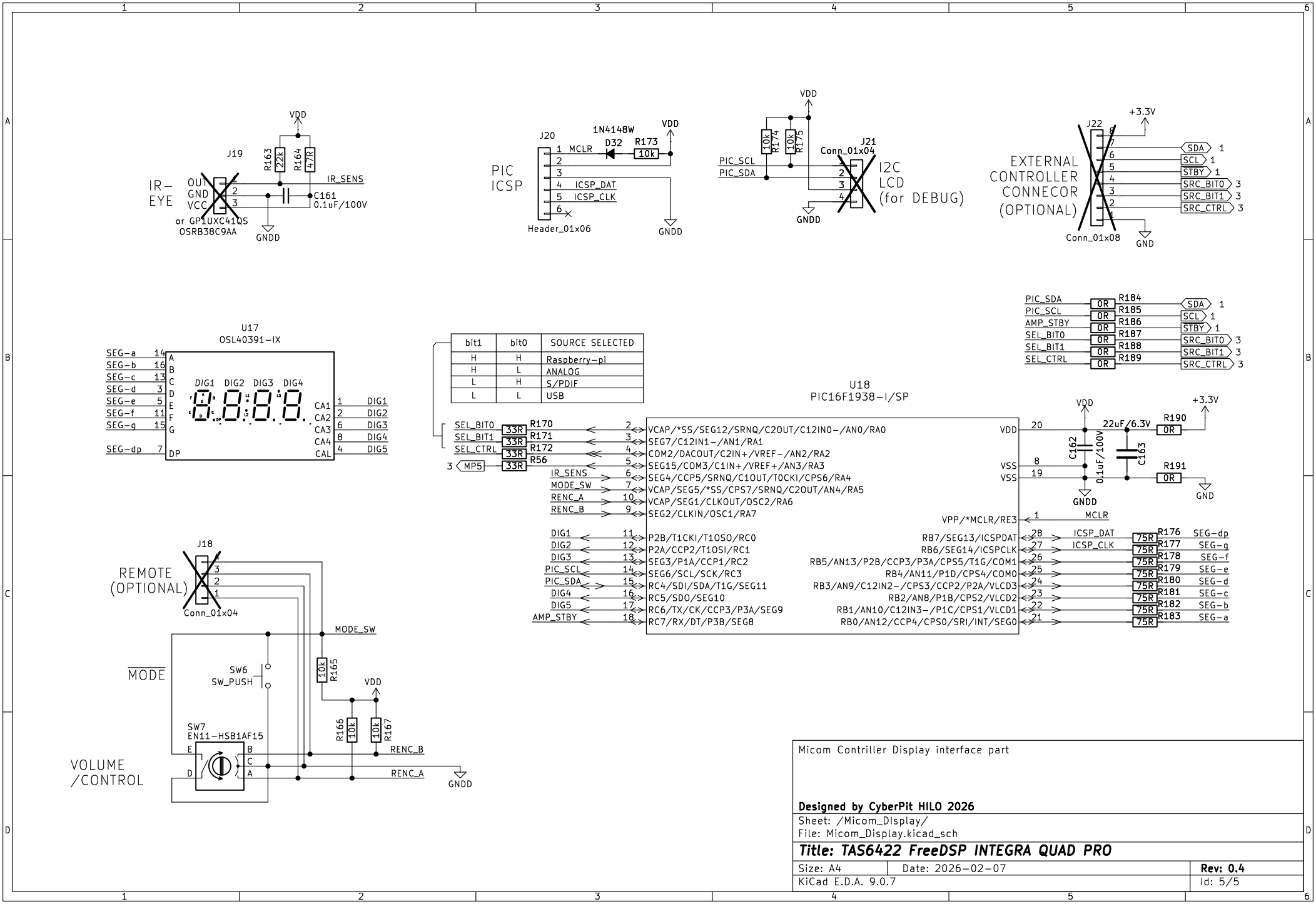

Micom Contriller Display interface part

Designed by CyberPit HILO 2026

Sheet: /Micom_DIsplay/
File: Micom_Display.kicad_sch

Title: TAS6422 FreeDSP INTEGRA QUAD PRO

Size: A4	Date: 2026-02-07	**Rev: 0.4**
KiCad E.D.A. 9.0.7		Id: 5/5