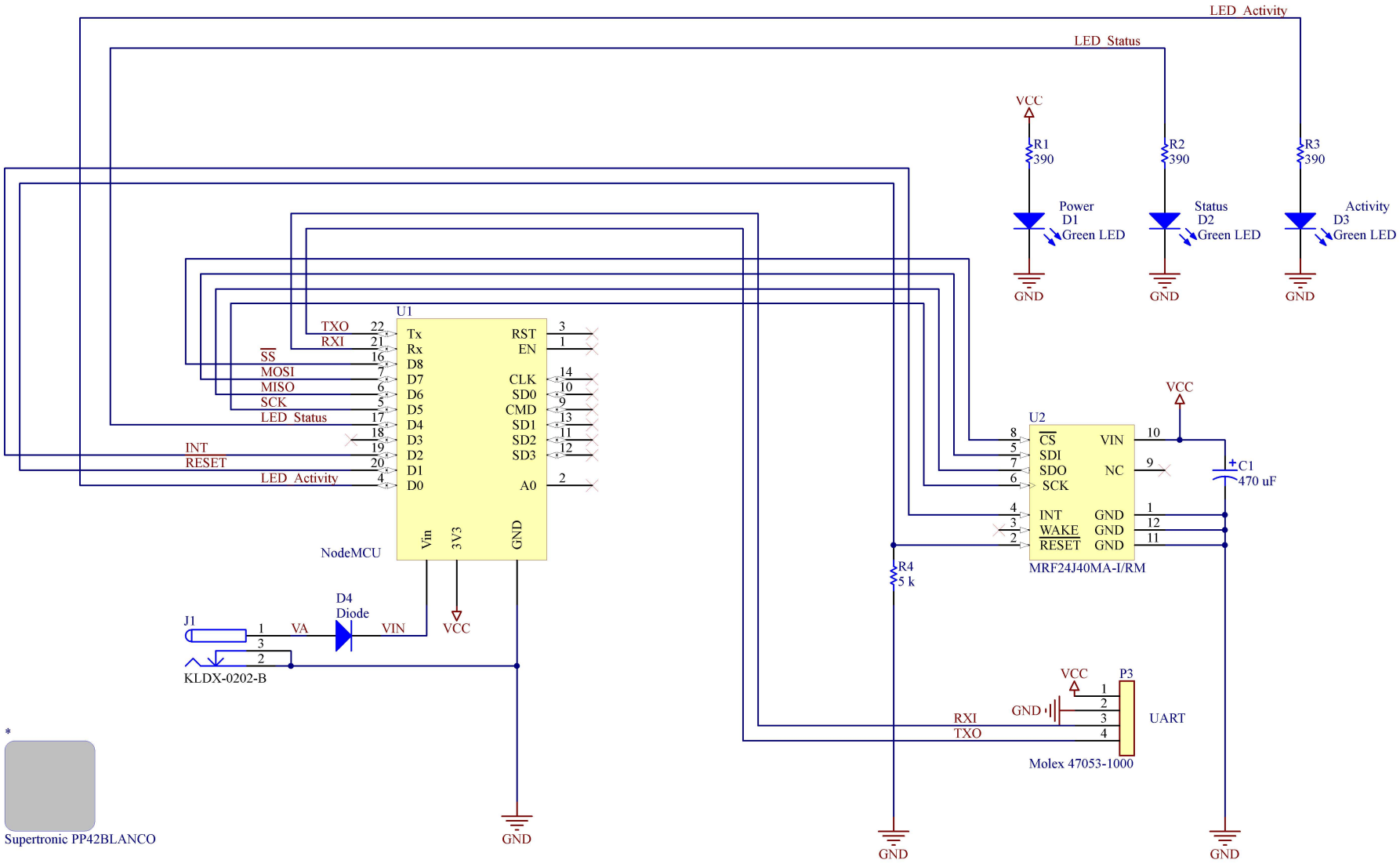

open source hardware

Title	***HobbyIoT NET Gateway***		*HobbyIoT Labs* ---------- *http://sites.google.com/view/hobbyiot/projects/hobbyiot-net*
Size: A4	Number: HIOT_GW	Revision: V1	
Date: 23/01/2021	Time: 20:48:41	Sheet 1 of 1	
File: HIOT_GW_V1.SchDoc			

CIRCUITMAKER