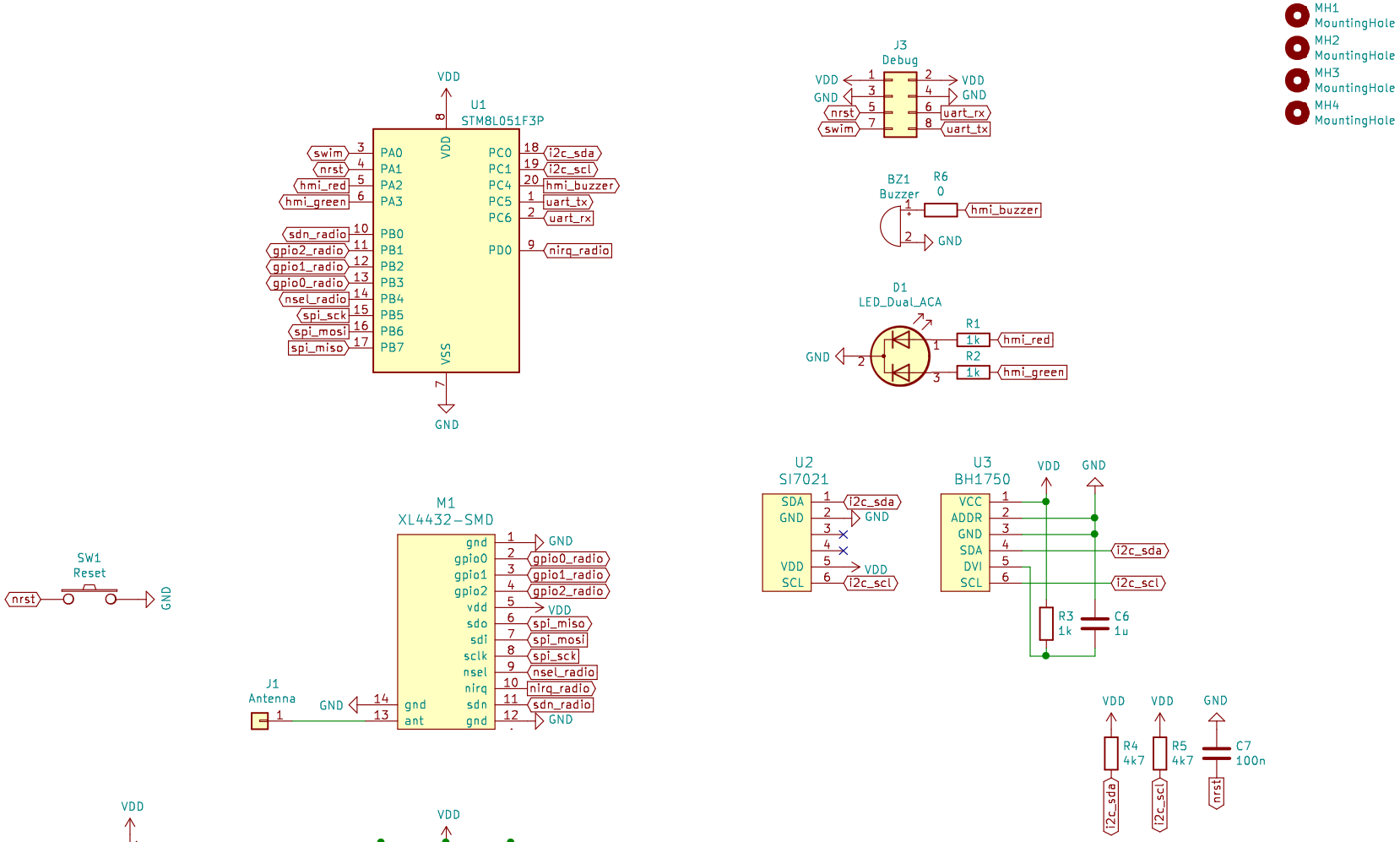

www.2-0.dk

Sheet: /

File: malory.sch

Title: Malory

Size: A4	Date: 2018-09-22	Rev: v1.0
KiCad E.D.A. kicad 5.1.8-db983349187ubuntu20.04.1		Id: 1/1