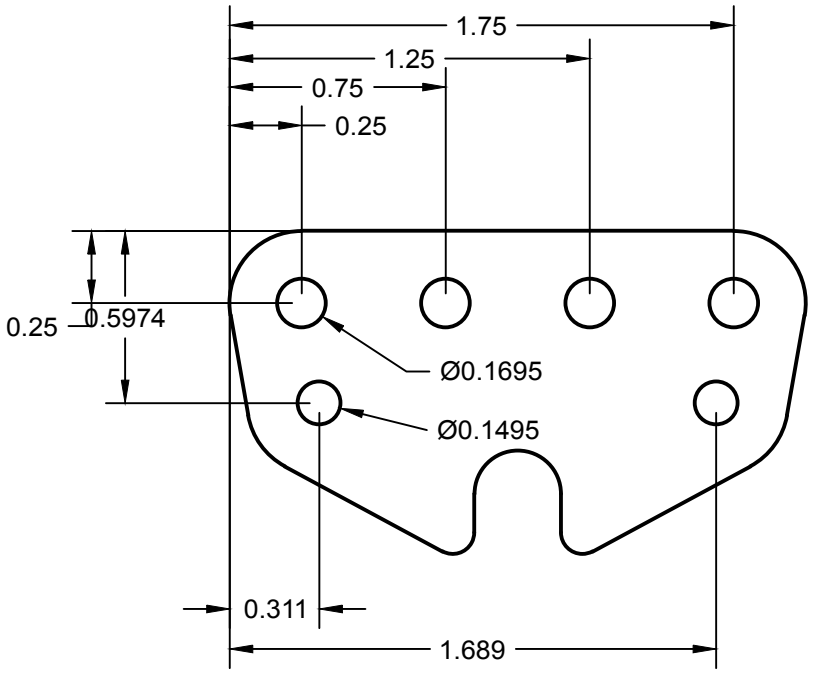


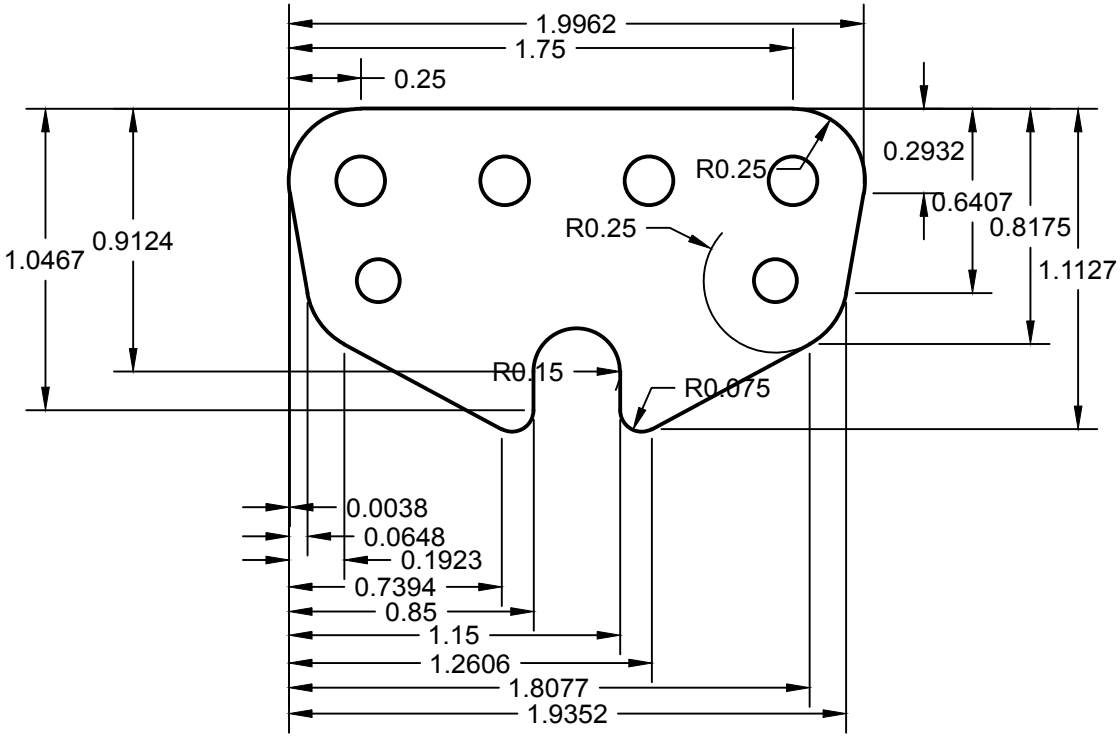


| | | | | | |
|---|---|---|---|---|---|
| | PROJECT<br>Router Jointer | | | | |
| | TITLE<br>Z-Axis stepper plate | | | | |
| APPROVED | SIZE | CODE | DWG NO | | REV |
| CHECKED | A | | | | |
| DRAWN James Freed 12/15/16 | SCALE 1.5:1 | WEIGHT | | SHEET 1/1 | |