	COUNT	DISCRIPTION OF REVISIONS	B Y	CHKD	DATE		COUNT	DISCRIPTION OF REVISIONS	B Y	CHKD	DATE
1		RE-D-885	MJH	KTS	06.02.13						. .
					. .						. .
					. .						. .

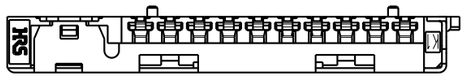

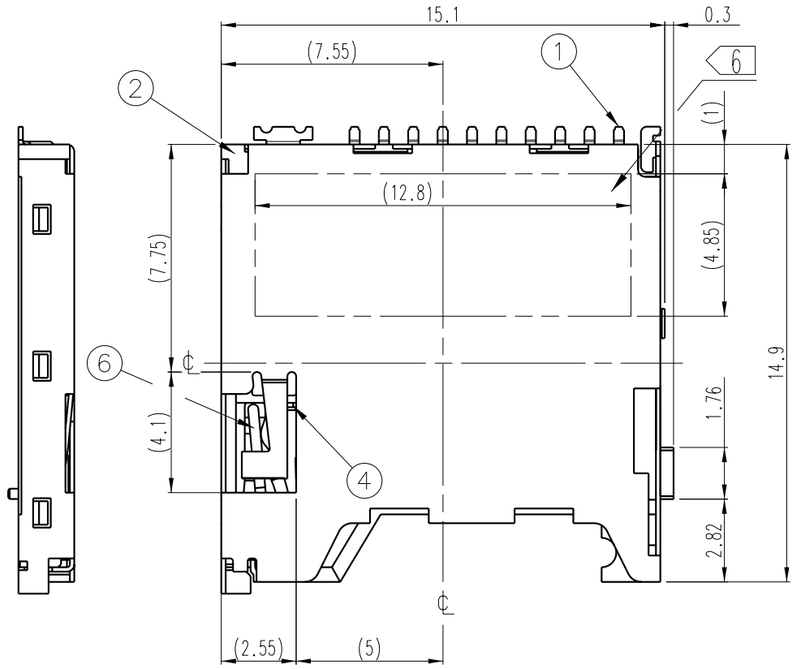

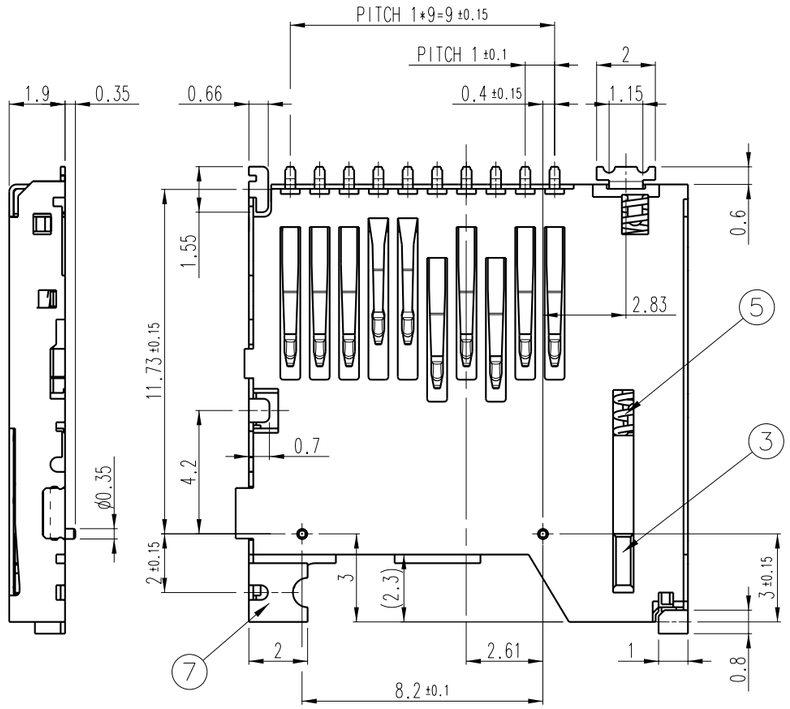

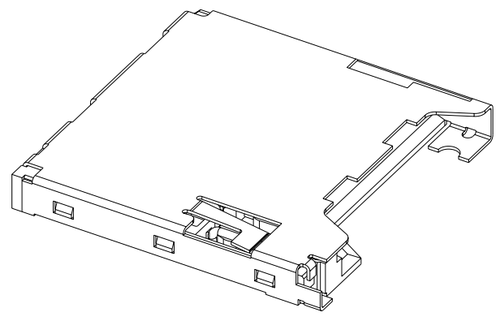

ISOMETRIC VIEW

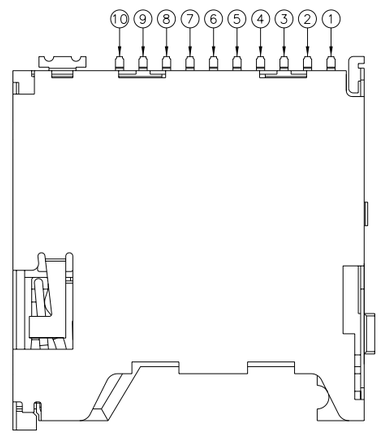

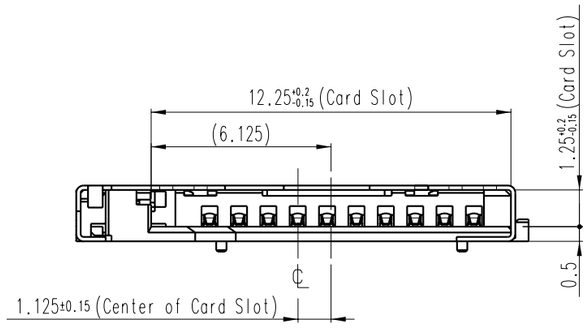

NO.	MATERIAL	FINISH, REMARKS		NO.	MATERIAL	FINISH, REMARKS	
3	PA46	(BLACK)UL 94V-0		7	SUS (T=0.15)	MOUNTING AREA	Ni1~5+Au0.03μ
2	LCP	(BLACK)UL 94V-0		6	SUS		
1	COPPER ALLOY (T=0.15)	CONTACT AREA	Ni1~5+Au0.3μ	5	SWP	Ni	
		MOUNTING AREA	Ni1~5+Au0.03μ	4	SUS		

REMARKS

DRAWN	DESIGNED	CHECKED	APPROVED	RELEASED
MA.J.H 05.11.21	MA.J.H 05.11.21	KANG.T.S 05.11.21	JANG.C.M 05.11.21	ENG 06.02.17 DEPT

CODE NO. (OLD)

SCALE 5:1

UNITS mm

DRAWING NO. EDC3-601253

HIROSE KOREA CO.,LTD.

PART NO. SFM1A-PEJ

CODE NO. CL 6582-0002-8

1/3

	COUNT	DISCRIPTION OF REVISIONS	B Y	CHKD	DATE		COUNT	DISCRIPTION OF REVISIONS	B Y	CHKD	DATE
1		RE-D-885	MJH	KTS	06.02.13						. .
					. .						. .
					. .						. .

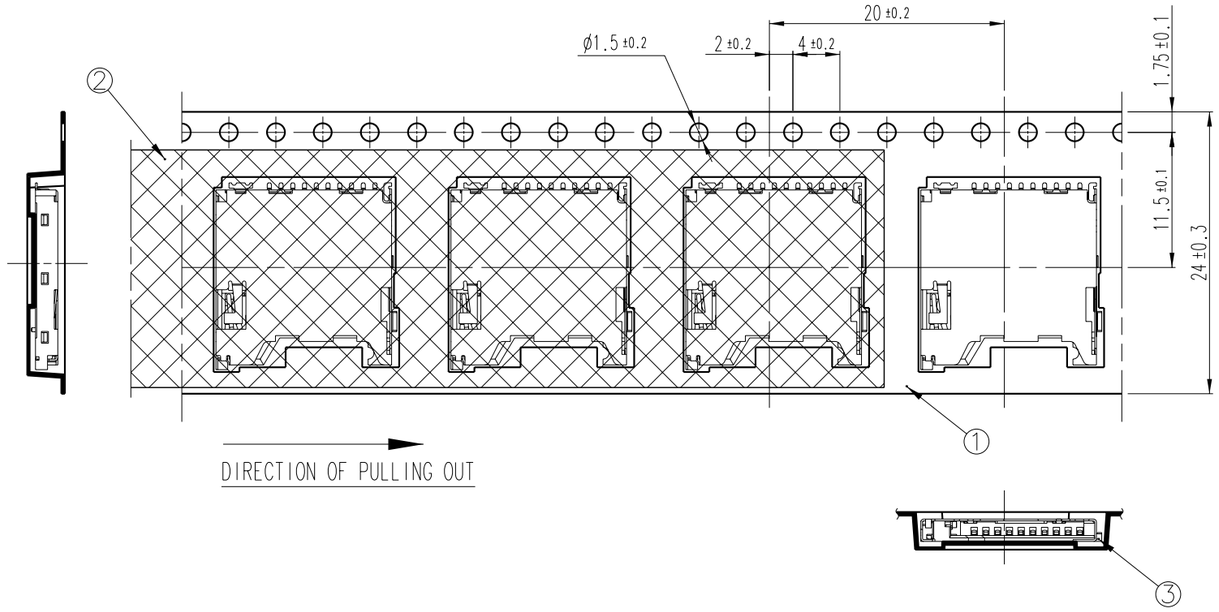

REEL DIMENTION (FREE)

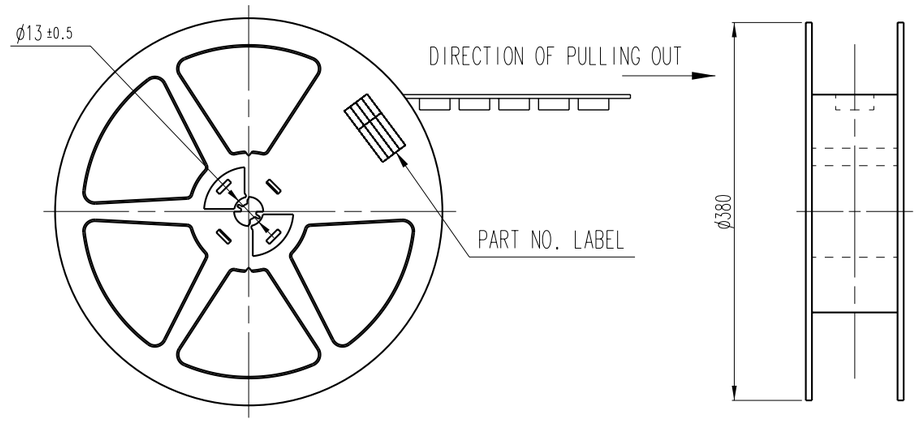

DETAIL OF PART NO. LABEL

MODEL NO	SFM1A-PEJ
LOT NO	
Q'TY	1000PCS
INSPECTOR	
SUPPLIER	HIROSE KOREA CO.,LTD.

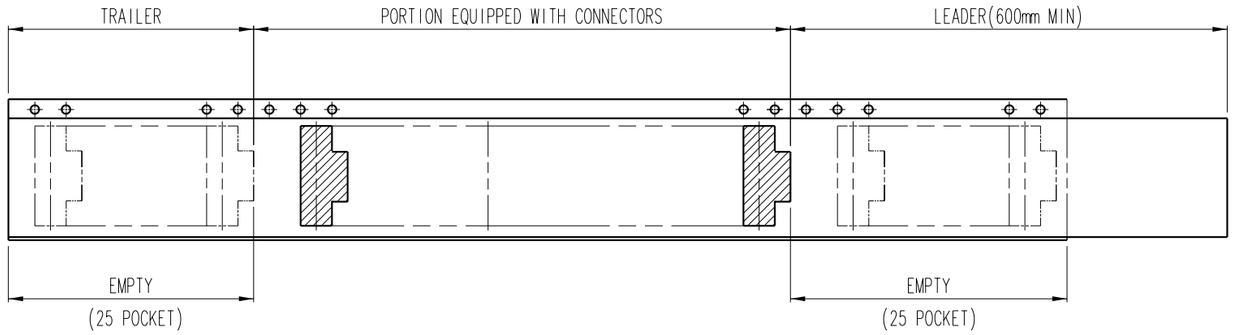

- NOTE -

1. 1 REEL CONTAINS 1000PCS.

NO.	METERIAL	FINISH,REMARKS	NO.	METERIAL	FINISH,REMARKS
2	PS	COVER TAPE			
1	PS	EMBOSS TAPE	3	CONNECTOR	SFM1A-PEJ

REMARKS

DRAWN	DESIGNED	CHECKED	APPROVED	RELEASED
MA.J.H 05.11.21	MA.J.H 05.11.21	KANG.T.S 05.11.21	JANG.C.M 05.11.21	ENG 06.02.17 DEPT

CODE NO. (OLD)

SCALE N:S

UNITS mm

DRAWING NO. EDC3-601253

HRS HIROSE KOREA CO.,LTD.

PART NO. SFM1A-PEJ

CODE NO. CL 6582-0002-8

3/3

	COUNT	DISCRIPTION OF REVISIONS	B Y	CHKD	DATE		COUNT	DISCRIPTION OF REVISIONS	B Y	CHKD	DATE
1		RE-D-885	MJH	KTS	06.02.13						. .
					. .						. .
					. .						. .

Card pushed position

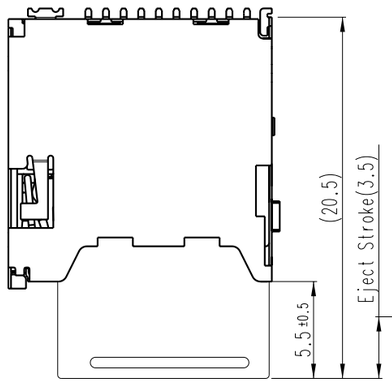

Card ejected position

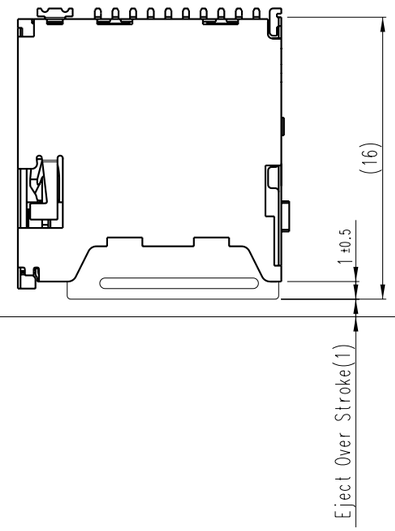

Card locked position

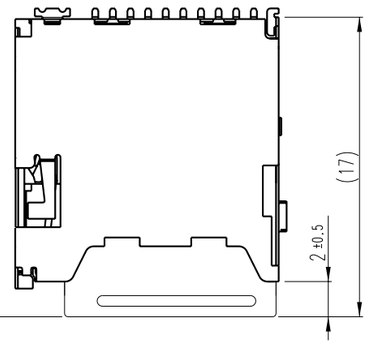

PCB PATTERN LAYOUT

GENERAL TOLERANCE : ±0.05

Prohibited Area

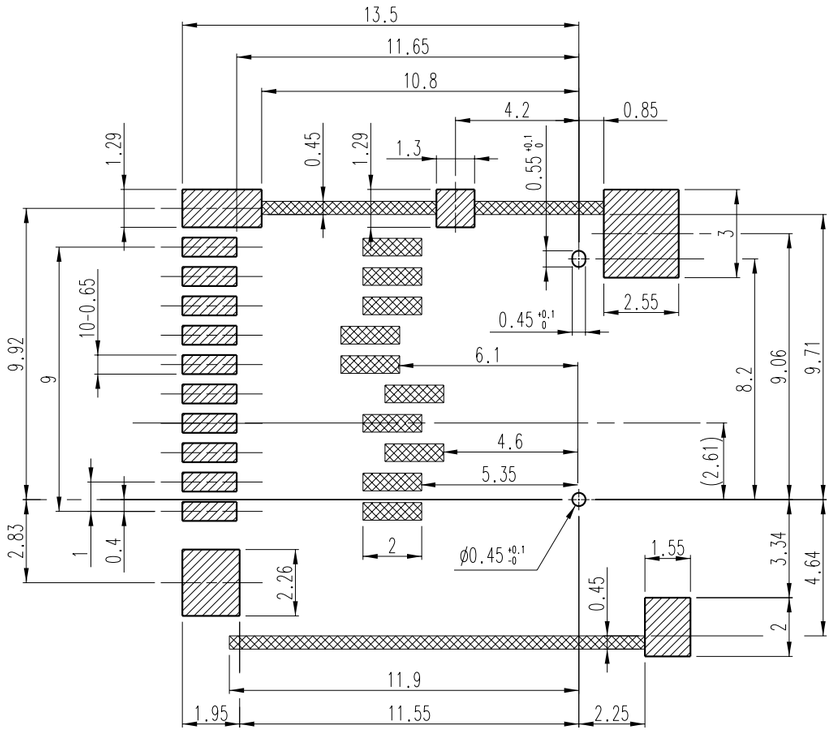

- NOTE -

1. "℄" Indecates the centerline of external of 15.1mm.
2. Lead conplanarity.

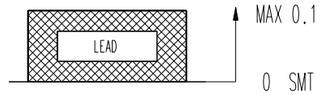

3. At the time of delivery of goods "CARD PUSHED POSITION" It is a state.
4. CARD At the time of insertion CONNECTOR In order of pad contact of CARD, it is as follows.

   ORDER : PIN No. 6,8 → 1,2,4,8,9,10 → 4,5
5. Package : EMBOSS TAPE
6. LOT NO printing area.
7. General tolerance ±0.2.
8. Card Detect Embodiment Method.

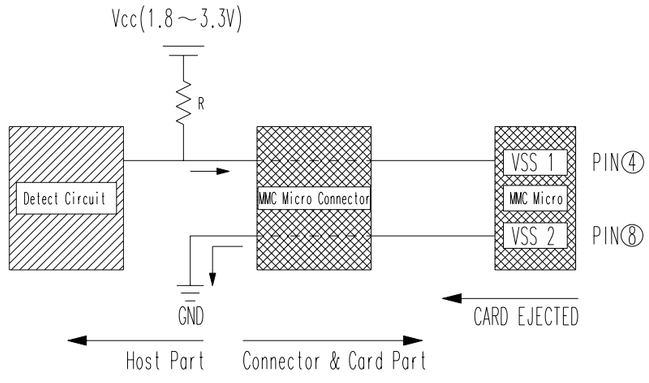

REMARKS	DRAWN	DESIGNED	CHECKED	APPROVED	RELEASED
	MA.J.H 05.11.21	MA.J.H 05.11.21	KANG.T.S 05.11.21	JANG.C.M 05.11.21	ENG 06.02.17 DEPT

CODE NO. (OLD)	SCALE N:S / UNITS mm	DRAWING NO. EDC3-601253	PART NO. SFM1A-PEJ
		HRS HIROSE KOREA CO.,LTD.	CODE NO. CL 6582-0002-8