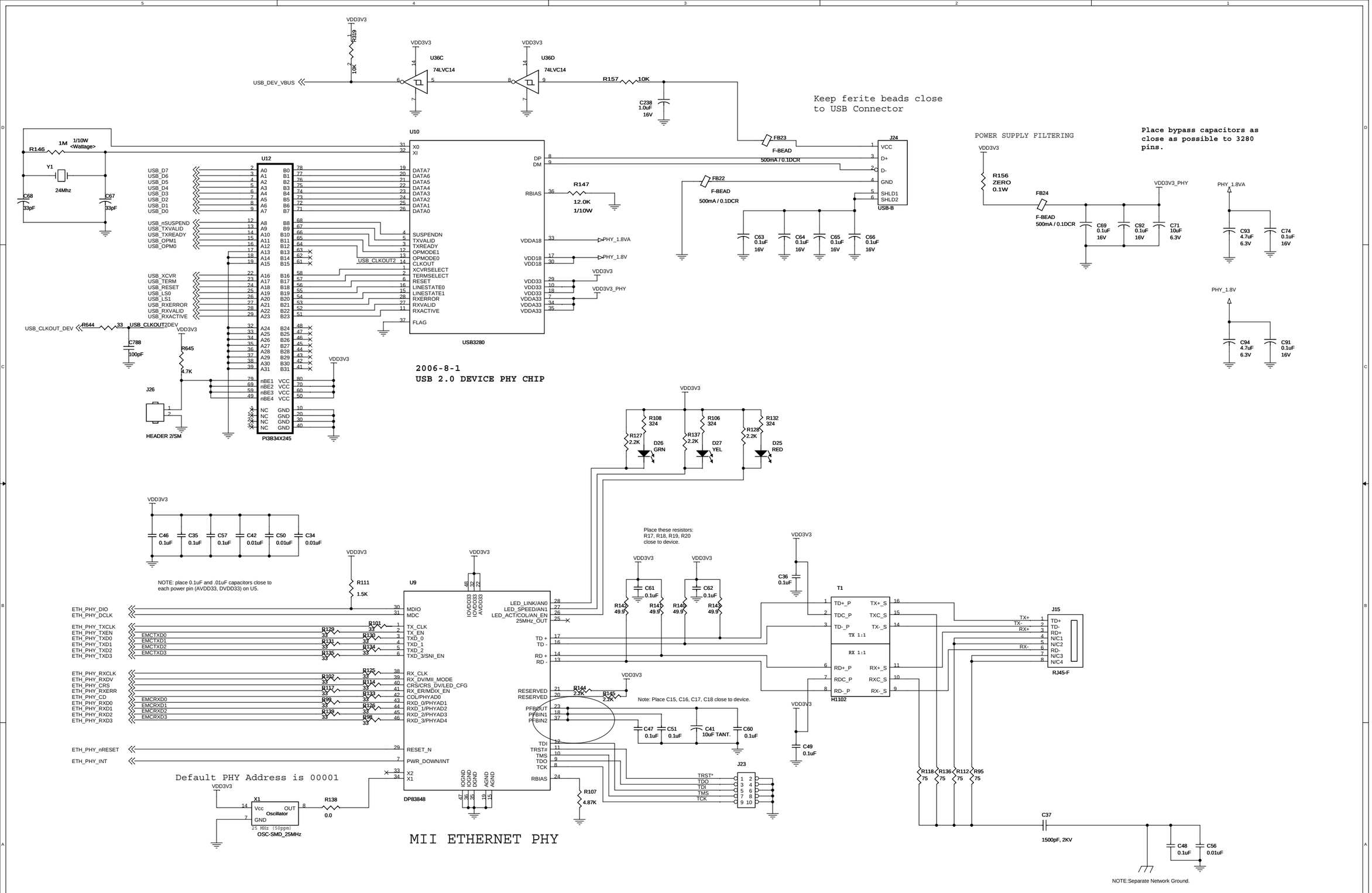
Keep ferite beads close to USB Connector
POWER SUPPLY FILTERING
Place bypass capacitors as close as possible to 3280 pins.
2006-8-1
USB 2.0 DEVICE PHY CHIP
USB3280
PI3B34X245
MII ETHERNET PHY
DP83848
Default PHY Address is 00001
Place these resistors: R17, R18, R19, R20 close to device.
NOTE: place 0.1uF and .01uF capacitors close to each power pin (AVDD33, DVDD33) on U5.
Note: Place C15, C16, C17, C18 close to device.
NOTE:Separate Network Ground.
Title
<Title>
Size A2
Document Number <Doc>
Rev 1.0
Date: Wednesday, August 02, 2006
Sheet 1 of 1

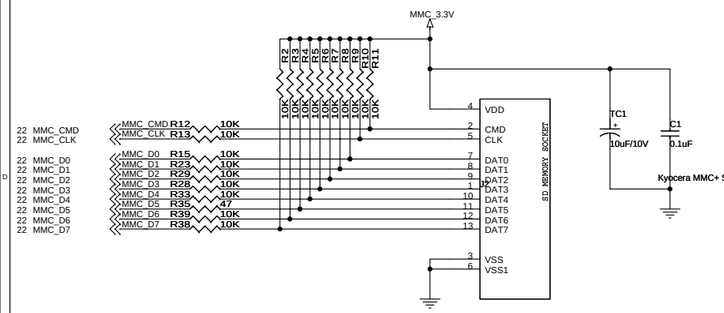

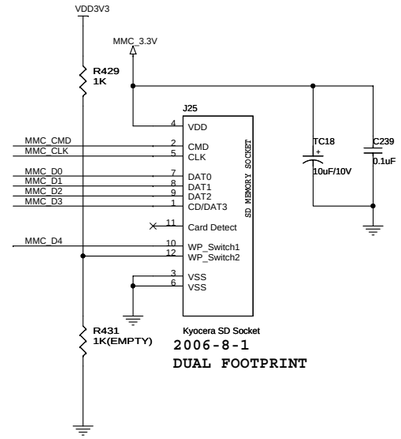

2006-8-1
DUAL FOOTPRINT

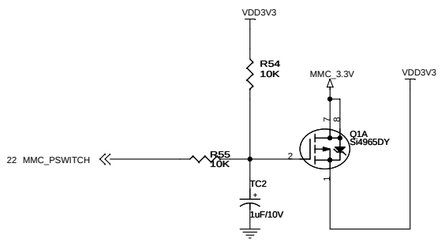

SD/HS-MMC SOCKET

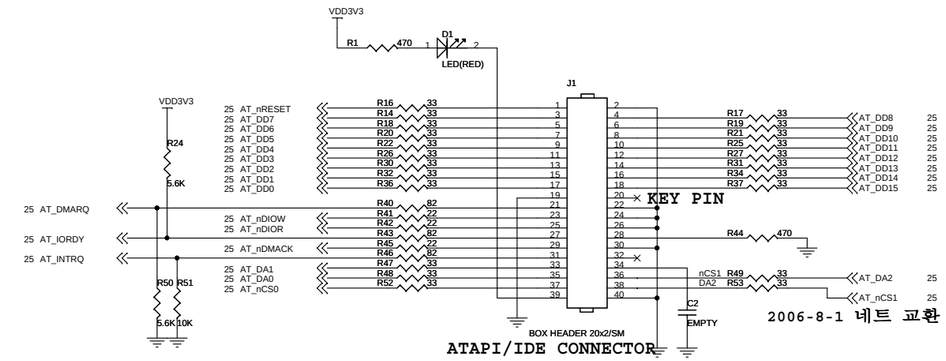

ATAPI/IDE CONNECTOR

2006-8-1 네트 교환

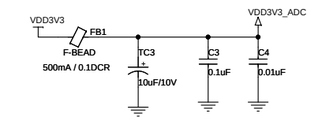

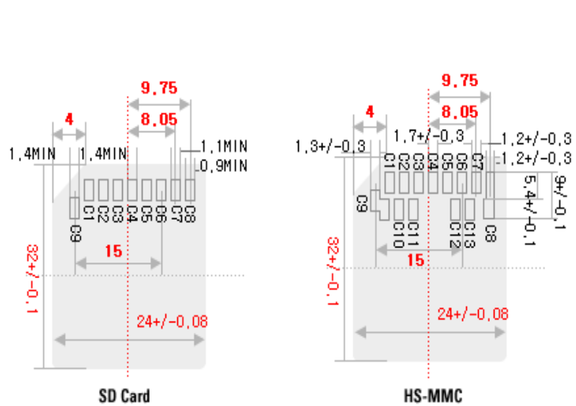

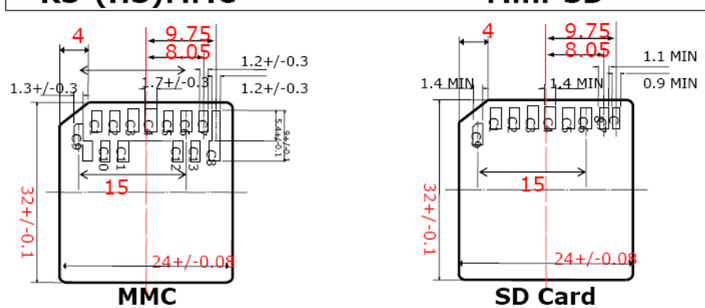

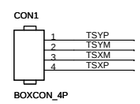

TOUCHSCREEN CONN.
MITSHMI
M60-04-30-134P

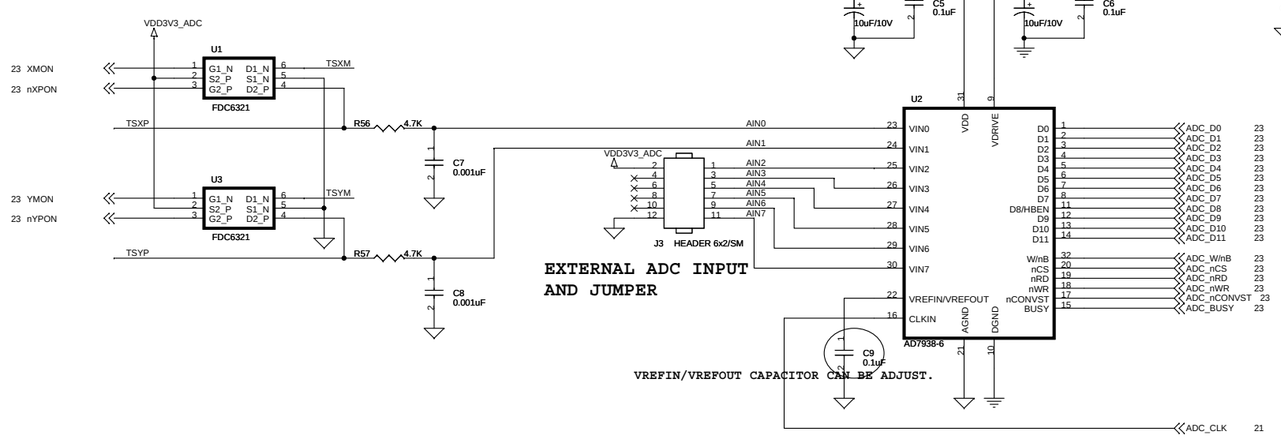

EXTERNAL ADC INPUT
AND JUMPER

VREFIN/VREFOUT CAPACITOR CAN BE ADJUST.

SANGHWA FPGA PLATFORM		
Title SD/MMC/IDE/TOUCH SCREEN		
Size A2	Document Number <Doc>	Rev 1.0
Date: Wednesday, August 02, 2006	Sheet 3 of 26	

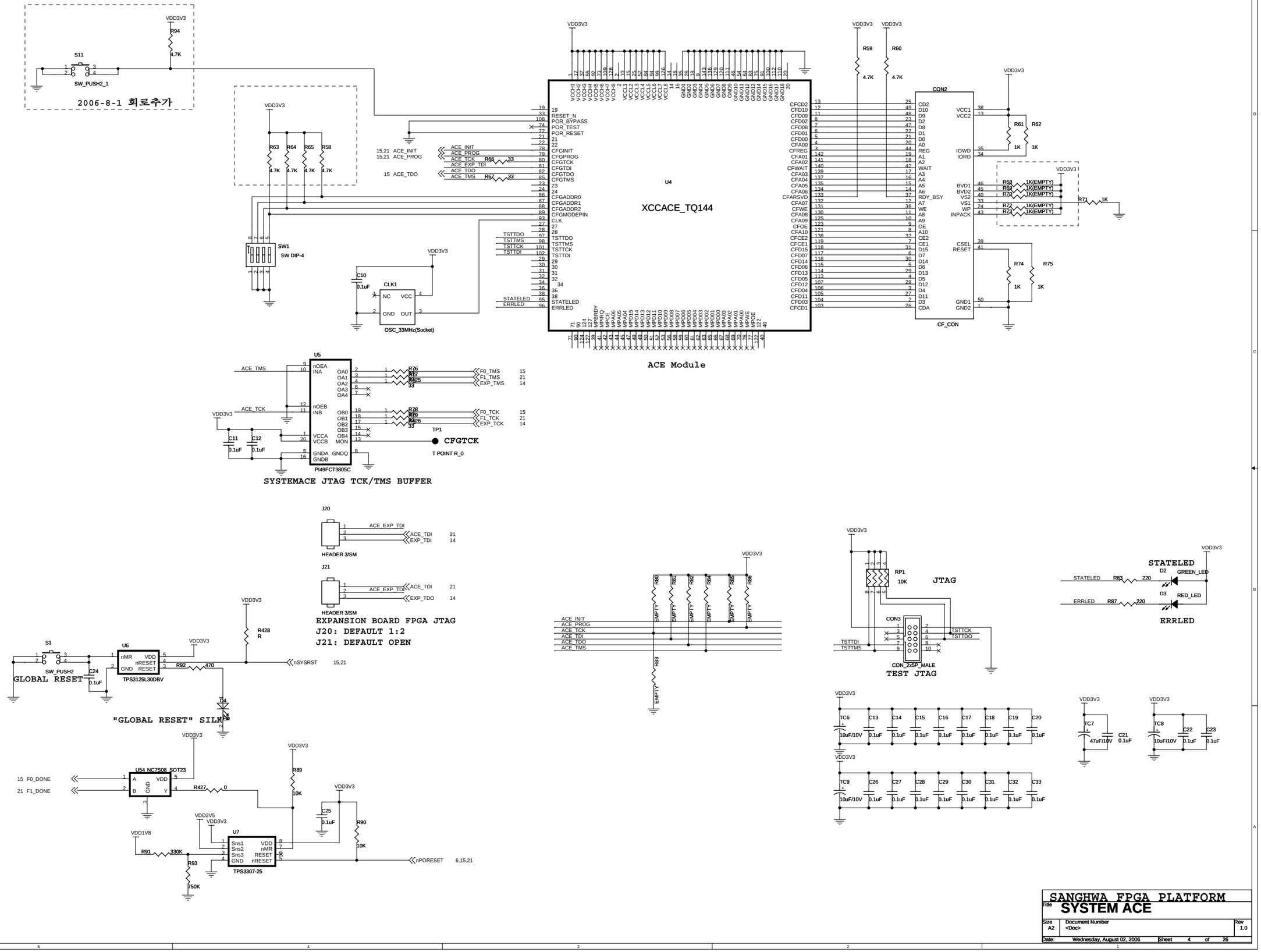

Title	SANGHWA FPGA PLATFORM SYSTEM ACE	
Size A2	Document Number <Doc>	Rev 1.0
Date: Wednesday, August 02, 2006	Sheet 4 of 26	

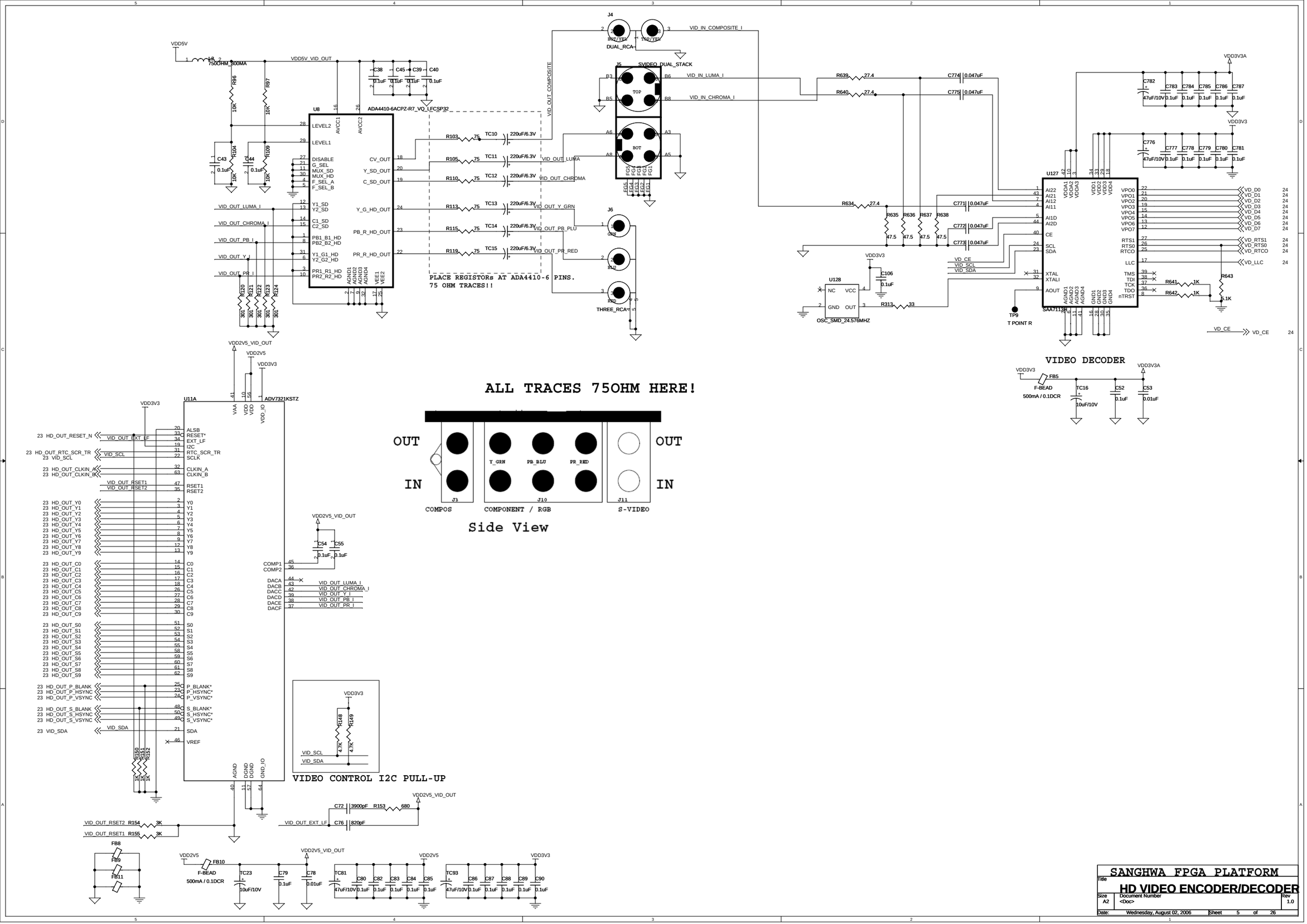
U8
ADA4410-6ACPZ-R7_VQ_LFCSP32
PLACE REGISTORs AT ADA4410-6 PINS.
75 OHM TRACES!!
J4
DUAL_RCA
J5
SVIDEO_DUAL_STACK
J6
THREE_RCA
U127
SAA7113H
VIDEO DECODER
U128
OSC_SMD_24.576MHZ
U11A
ADV7321KSTZ
ALL TRACES 75OHM HERE!
OUT
IN
COMPOS
COMPONENT / RGB
S-VIDEO
Side View
VIDEO CONTROL I2C PULL-UP
SANGHWA FPGA PLATFORM
HD VIDEO ENCODER/DECODER
Size A2
Document Number <Doc>
Rev 1.0
Date: Wednesday, August 02, 2006
Sheet 5 of 26

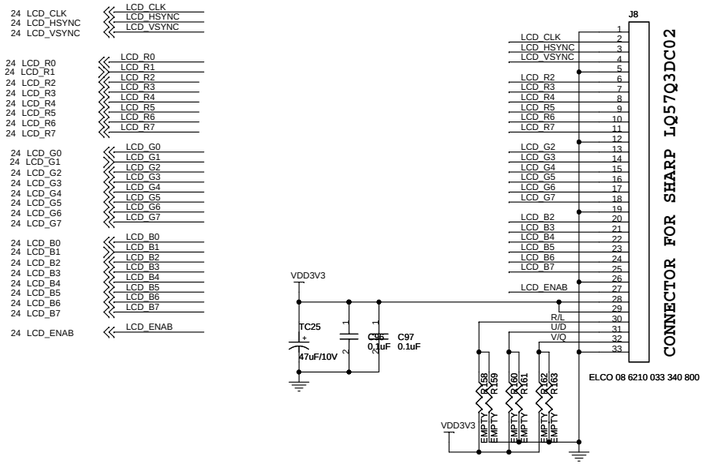

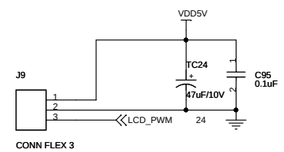

LCD BACK-LIGHT

CHECK VDD3V3 PIN!!!

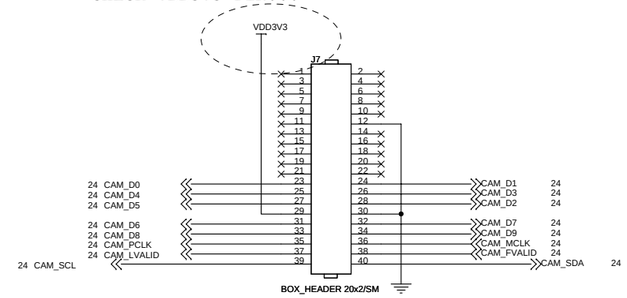

CMOS IMAGE SENSOR SOCKET

TERASIC, INC. (TRDB_DC2 BOARD)

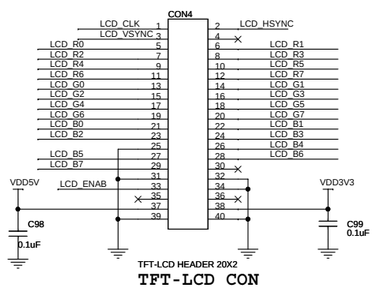

TFT-LCD CON

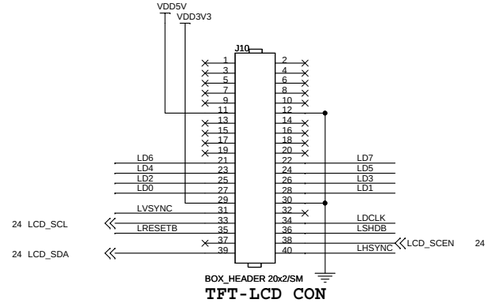

TFT-LCD CON

TERASIC, INC. (TRDB_LCM BOARD)

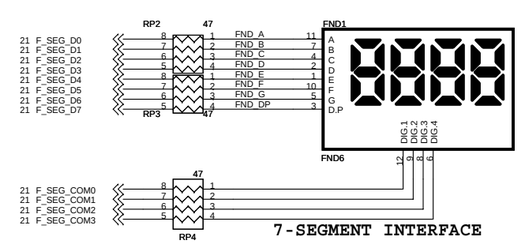

7-SEGMENT INTERFACE

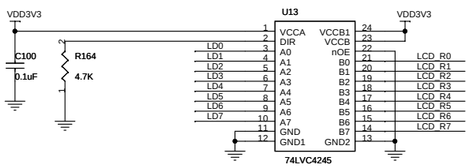

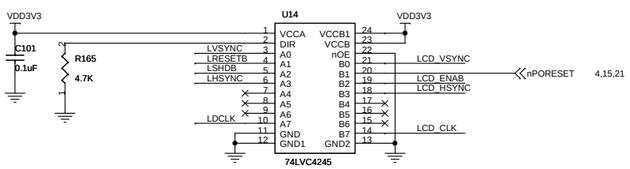

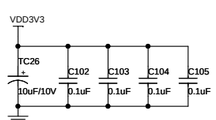

SANGHWA FPGA PLATFORM		
Title: CIS/TFT-LCD		
Size: A2	Document Number: <Doc>	Rev: 1.0
Date: Wednesday, August 02, 2006	Sheet 6 of 26	

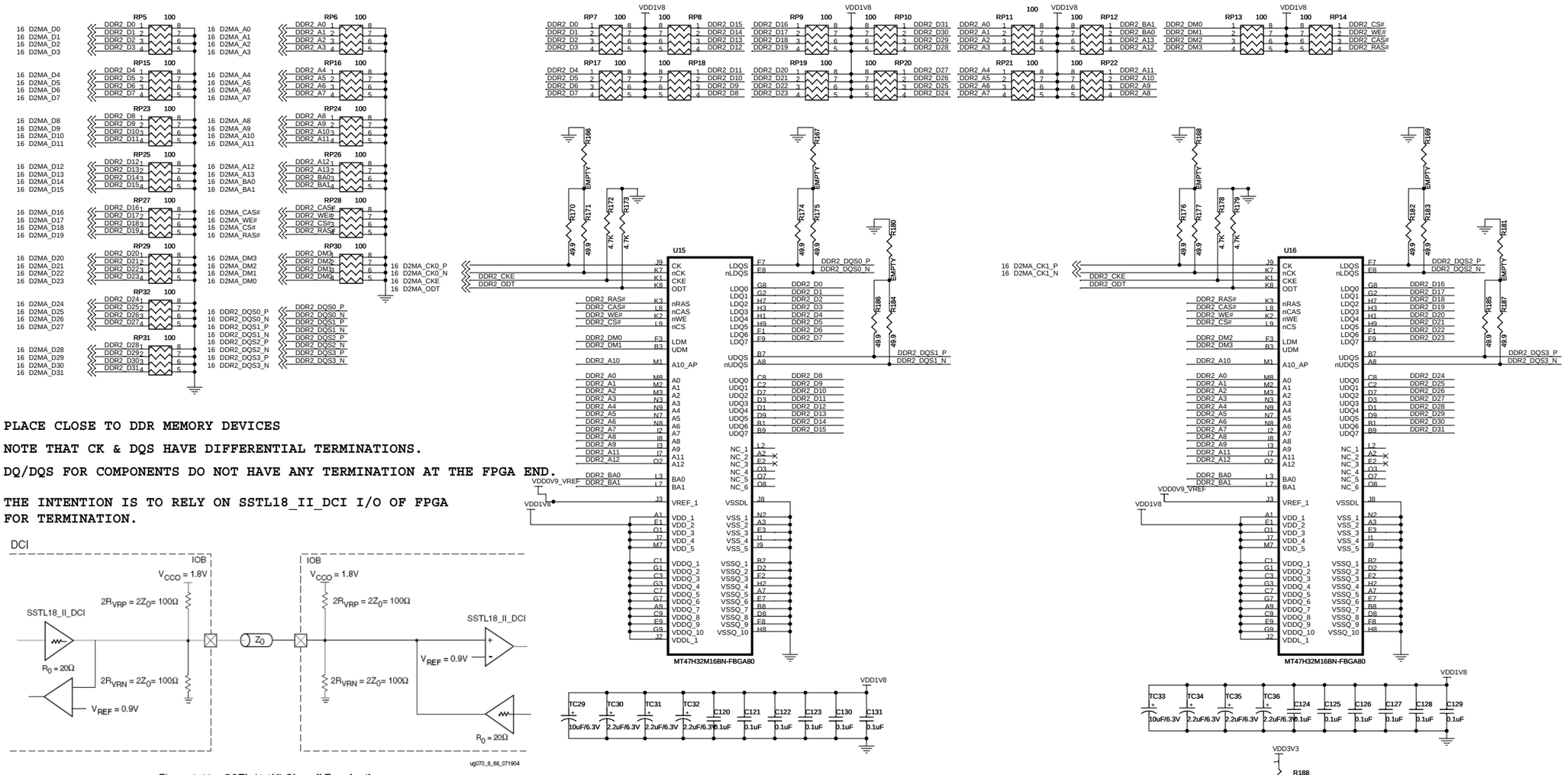

PLACE CLOSE TO DDR MEMORY DEVICES

NOTE THAT CK & DQS HAVE DIFFERENTIAL TERMINATIONS.

DQ/DQS FOR COMPONENTS DO NOT HAVE ANY TERMINATION AT THE FPGA END.

THE INTENTION IS TO RELY ON SSTL18_II_DCI I/O OF FPGA FOR TERMINATION.

Figure 6-68: **SSTL (1.8V) Class II Termination**

SANGHWA FPGA PLATFORM	
Title: FPGA #0 DDR2 SDRAM	
Size: A2	Document Number: <Doc>	Rev: 1.0
Date: Wednesday, August 02, 2006	Sheet 7 of 26

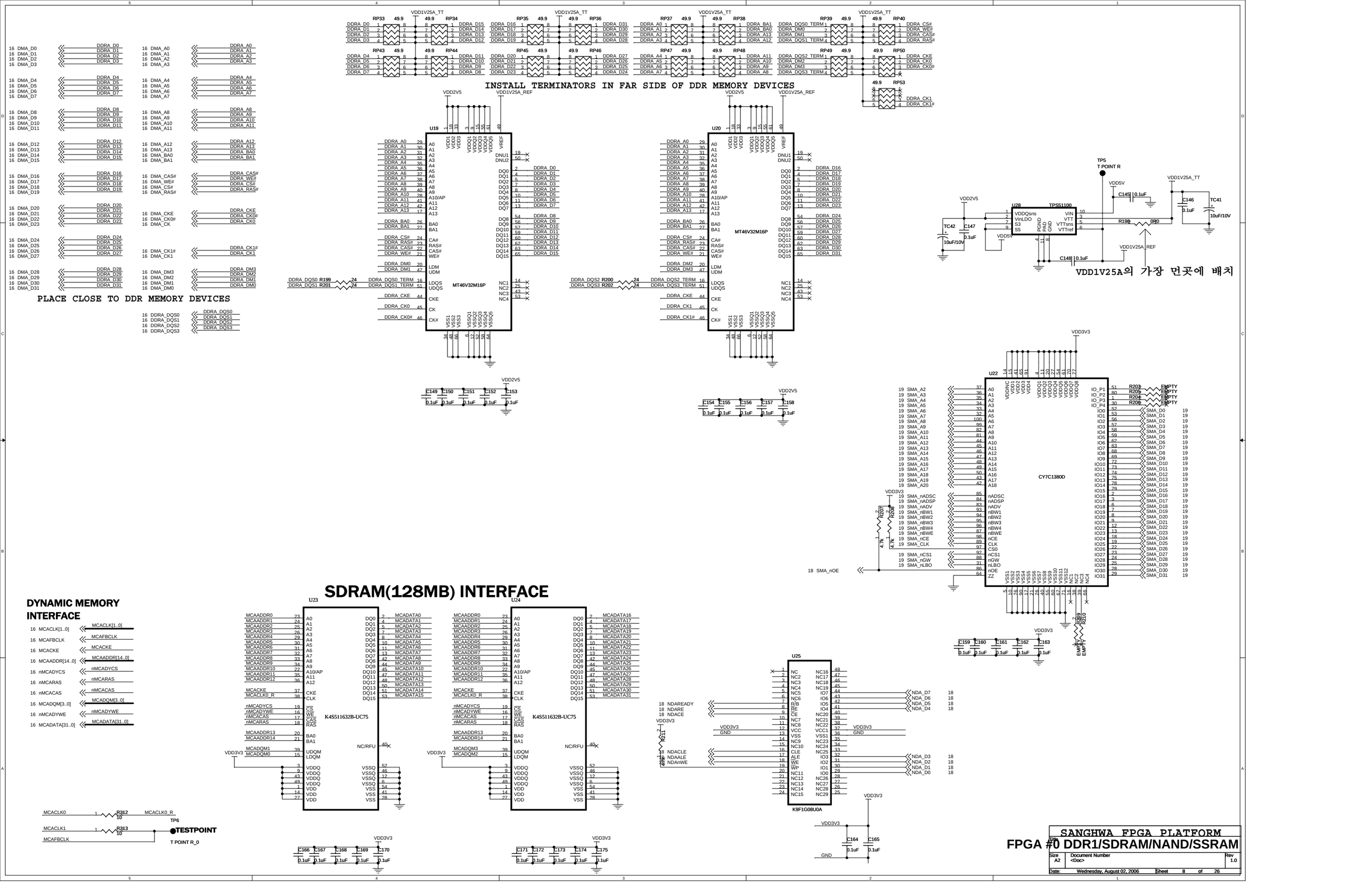
INSTALL TERMINATORS IN FAR SIDE OF DDR MEMORY DEVICES
PLACE CLOSE TO DDR MEMORY DEVICES
VDD1V25A의 가장 먼곳에 배치
SDRAM(128MB) INTERFACE
DYNAMIC MEMORY INTERFACE
MT46V32M16P
K4S511632B-UC75
CY7C1380D
K9F1G08U0A
TPS51100
TESTPOINT
SANGHWA FPGA PLATFORM
FPGA #0 DDR1/SDRAM/NAND/SSRAM
Size A2
Document Number <Doc>
Rev 1.0
Date: Wednesday, August 02, 2006
Sheet 8 of 26

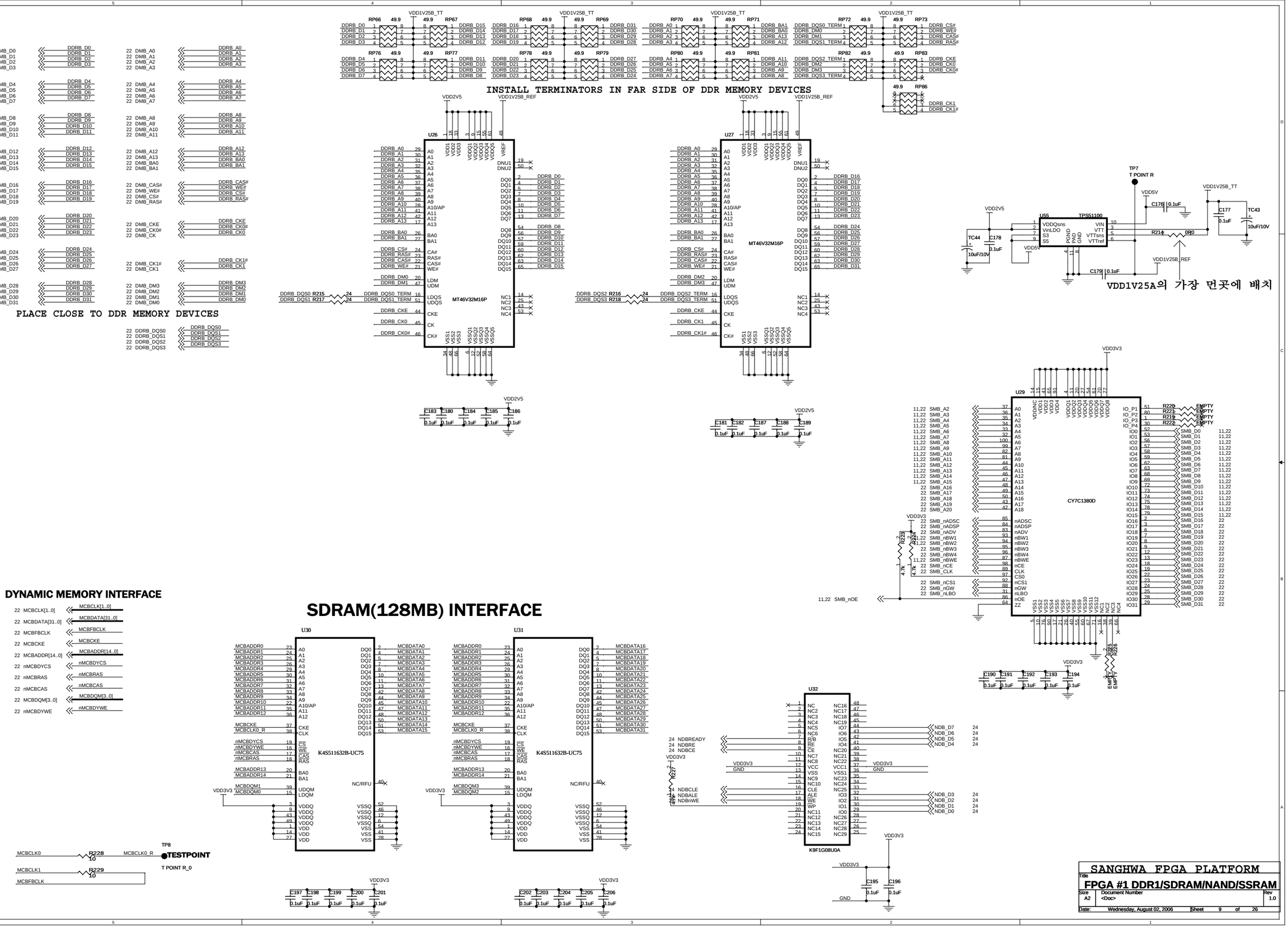
INSTALL TERMINATORS IN FAR SIDE OF DDR MEMORY DEVICES
PLACE CLOSE TO DDR MEMORY DEVICES
VDD1V25A의 가장 먼곳에 배치
DYNAMIC MEMORY INTERFACE
SDRAM(128MB) INTERFACE
U26
U27
MT46V32M16P
U29
CY7C1380D
U30
U31
K4S511632B-UC75
U32
K9F1G08U0A
U55
TPS51100
TP7
T POINT R
TP8
TESTPOINT
T POINT R_0
SANGHWA FPGA PLATFORM
FPGA #1 DDR1/SDRAM/NAND/SSRAM
Size A2
Document Number <Doc>
Rev 1.0
Date: Wednesday, August 02, 2006
Sheet 9 of 26

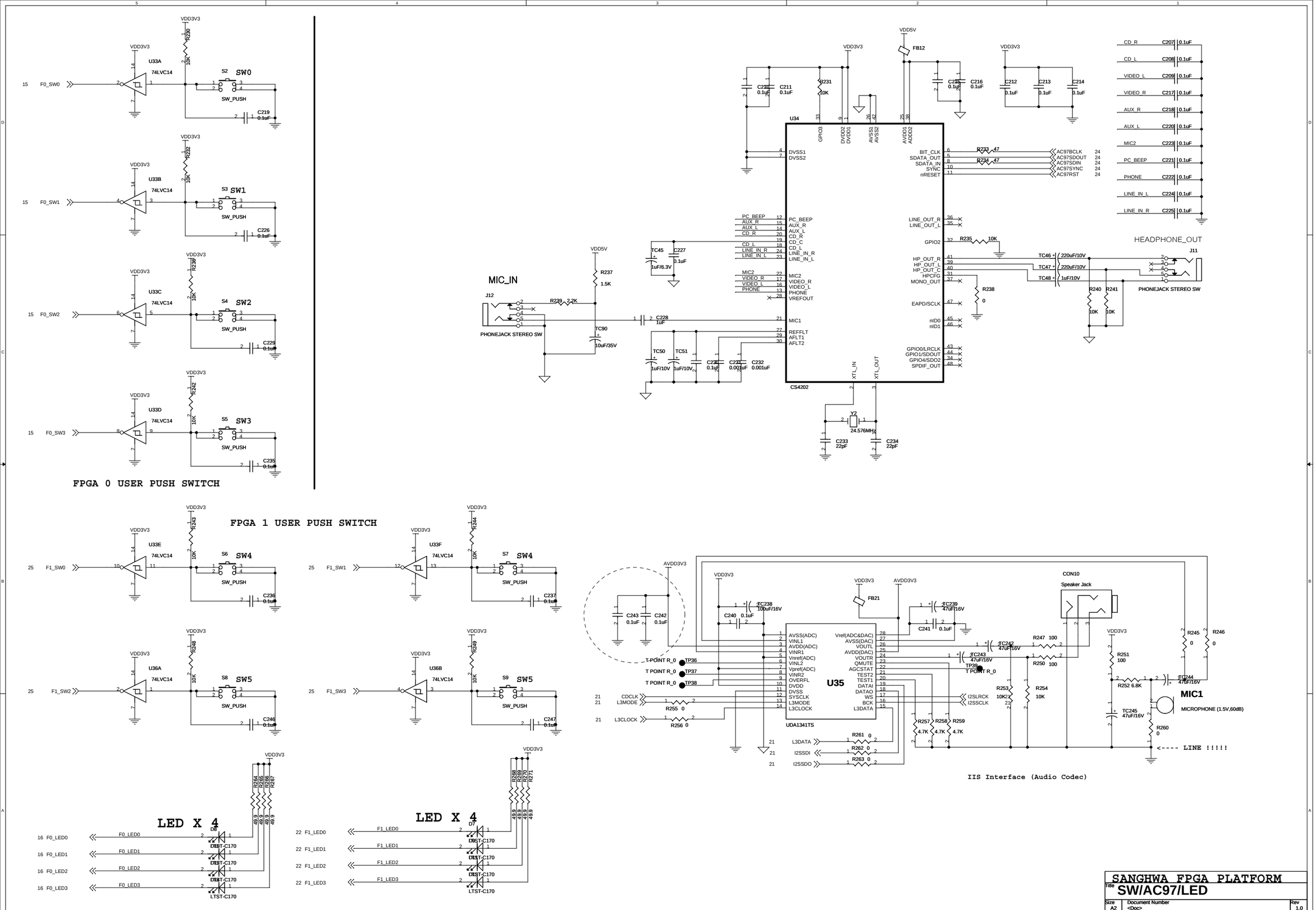
FPGA 0 USER PUSH SWITCH
FPGA 1 USER PUSH SWITCH
SW0
SW1
SW2
SW3
SW4
SW5
SW_PUSH
74LVC14
U33A
U33B
U33C
U33D
U33E
U33F
U36A
U36B
F0_SW0
F0_SW1
F0_SW2
F0_SW3
F1_SW0
F1_SW1
F1_SW2
F1_SW3
VDD3V3
VDD5V
AVDD3V3
MIC_IN
PHONEJACK STEREO SW
HEADPHONE_OUT
PHONEJACK STEREO SW
CS4202
U34
U35
UDA1341TS
CON10
Speaker Jack
MIC1
MICROPHONE (1.5V,60dB)
<---- LINE !!!!!
IIS Interface (Audio Codec)
LED X 4
F0_LED0
F0_LED1
F0_LED2
F0_LED3
F1_LED0
F1_LED1
F1_LED2
F1_LED3
LTST-C170
24.576MHz
SANGHWA FPGA PLATFORM
SW/AC97/LED
Size A2
Document Number <Doc>
Rev 1.0
Date: Wednesday, August 02, 2006
Sheet 10 of 26

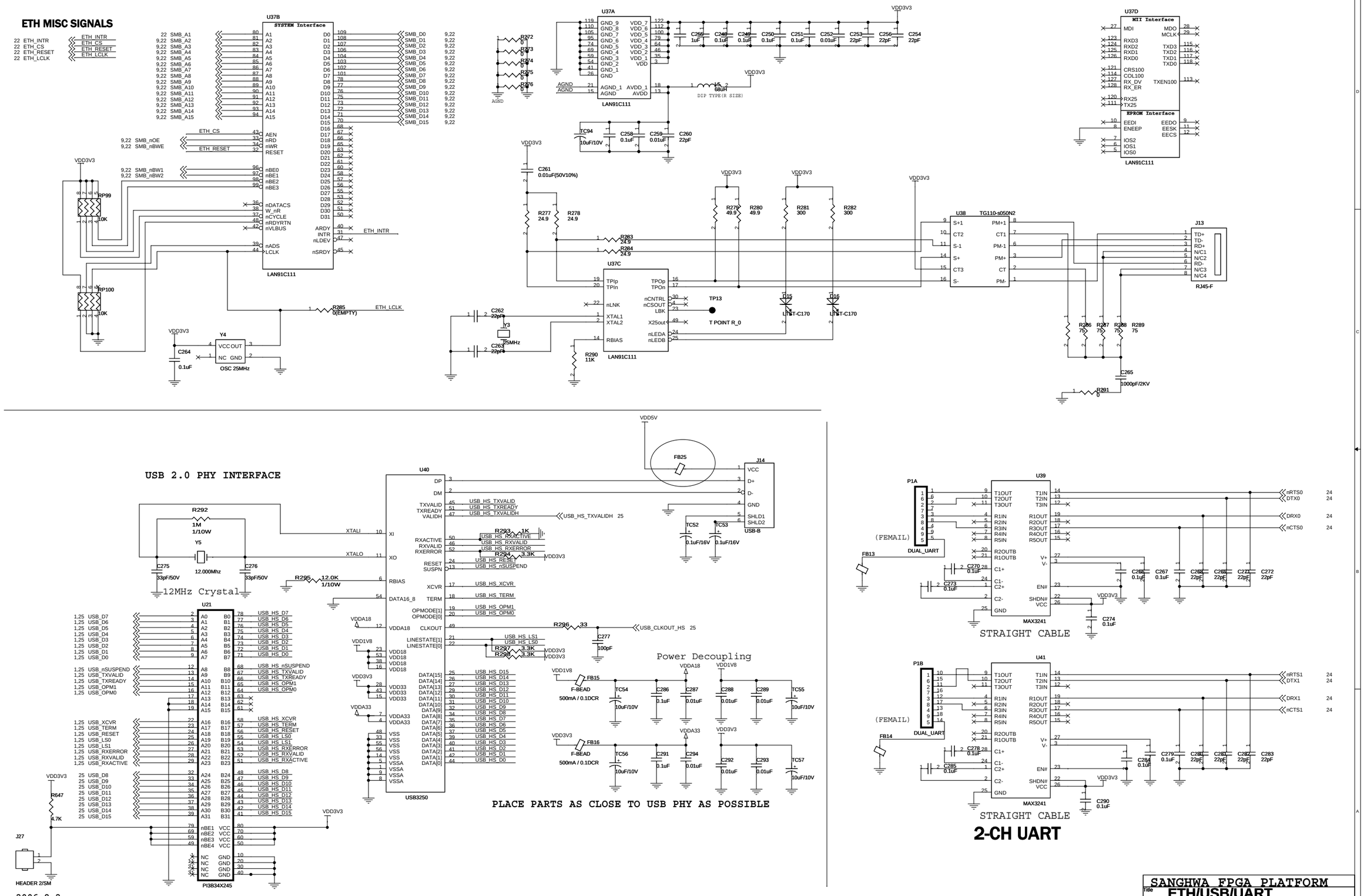
ETH MISC SIGNALS
22 ETH_INTR
22 ETH_CS
22 ETH_RESET
22 ETH_LCLK
ETH_INTR
ETH_CS
ETH_RESET
ETH_LCLK
U37B
SYSTEM Interface
LAN91C111
U37A
LAN91C111
U37D
MII Interface
EPROM Interface
LAN91C111
U37C
LAN91C111
U38
TG110-s050N2
J13
RJ45-F
RP99
10K
RP100
10K
Y4
OSC 25MHz
Y3
25MHz
R285
0(EMPTY)
ETH_LCLK
ETH_INTR
TP13
T POINT R_0
D15
D16
LNST-C170
R272
R273
R274
R275
R276
R279
R280
R281
R282
R283
R284
R290
11K
R291
0
R295
12.0K
1/10W
R296
33
R297
3.3K
R298
3.3K
R293
1K
R294
3.3K
L5
68uH
DIP TYPE(R SIZE)
C261
0.01uF(50V10%)
C262
22pF
C263
22pF
C264
0.1uF
C265
1000pF/2KV
C274
0.1uF
C277
100pF
C290
0.1uF
R286
75
R287
75
R288
75
R289
75
VDD3V3
VDD5V
AGND
USB 2.0 PHY INTERFACE
R292
1M
1/10W
Y5
12.000Mhz
C275
33pF/50V
C276
33pF/50V
12MHz Crystal
U40
USB3250
FB25
J14
USB-B
VCC
D+
D-
GND
SHLD1
SHLD2
TC52
0.1uF/16V
TC53
0.1uF/16V
USB_HS_TXVALIDH 25
USB_CLKOUT_HS 25
U21
PI3B34X245
R647
4.7K
J27
HEADER 2/SM
Power Decoupling
FB15
F-BEAD
500mA / 0.1DCR
FB16
F-BEAD
500mA / 0.1DCR
TC54
10uF/10V
TC55
10uF/10V
TC56
10uF/10V
TC57
10uF/10V
PLACE PARTS AS CLOSE TO USB PHY AS POSSIBLE
P1A
DUAL_UART
(FEMAIL)
FB13
U39
MAX3241
STRAIGHT CABLE
nRTS0
DTX0
DRX0
nCTS0
P1B
DUAL_UART
(FEMAIL)
FB14
U41
MAX3241
STRAIGHT CABLE
nRTS1
DTX1
DRX1
nCTS1
2-CH UART
2006-8-2
USB HOST UTMI ENABLE
SANGHWA FPGA PLATFORM
ETH/USB/UART
Size A2
Document Number <Doc>
Rev 1.0
Date: Wednesday, August 02, 2006
Sheet 11 of 26

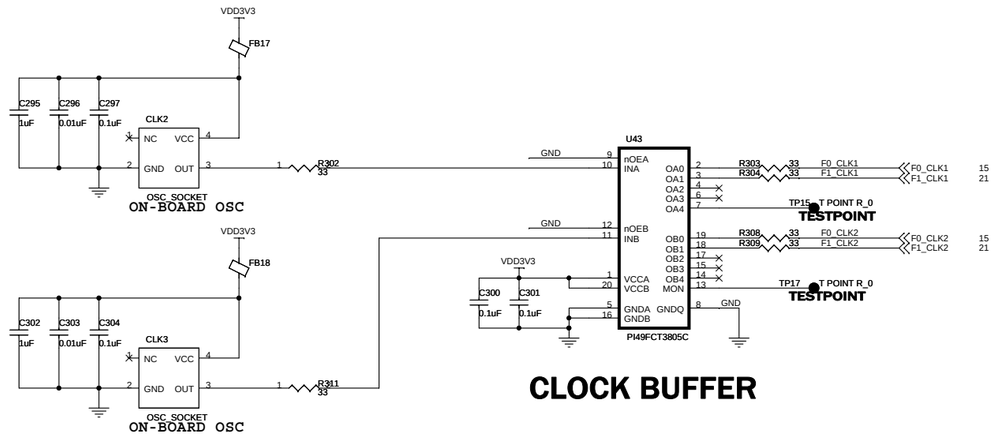

CLOCK BUFFER

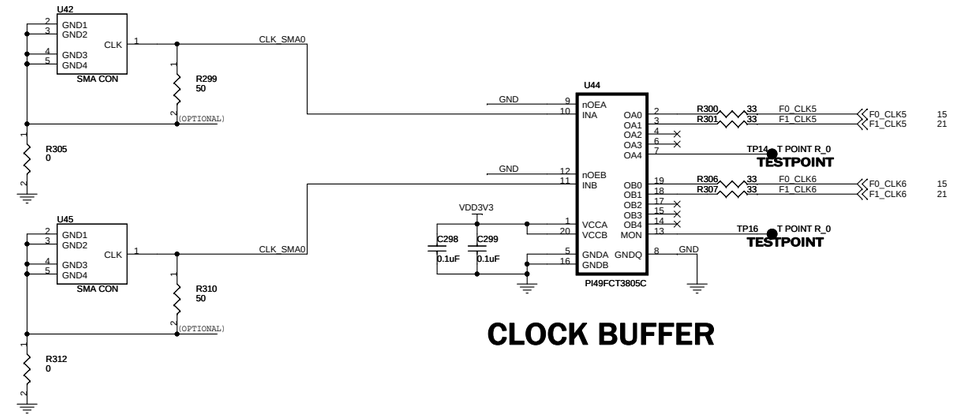

CLOCK BUFFER

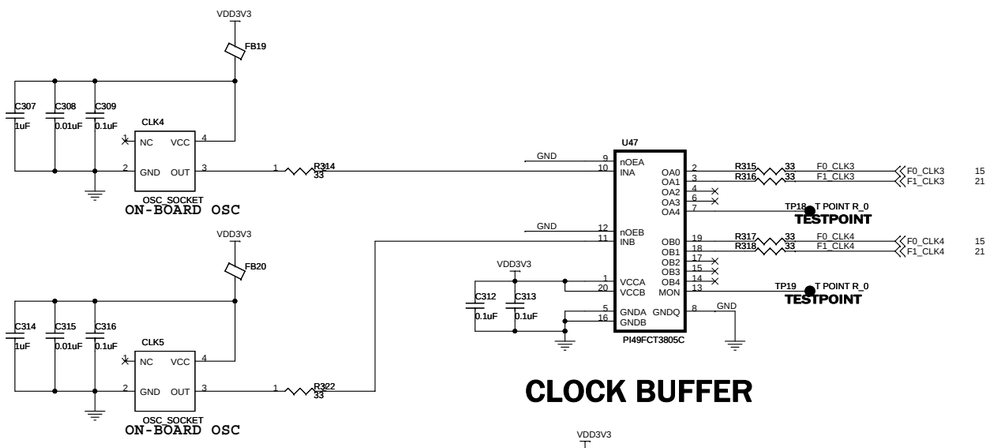

CLOCK BUFFER

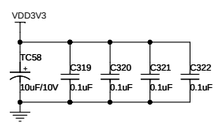

SANGHWA FPGA PLATFORM

Title **CLOCK/PLL/MULTIPLEXOR**

Size	Document Number	Rev
A2	<Doc>	1.0

Date: Wednesday, August 02, 2006 Sheet 12 of 26

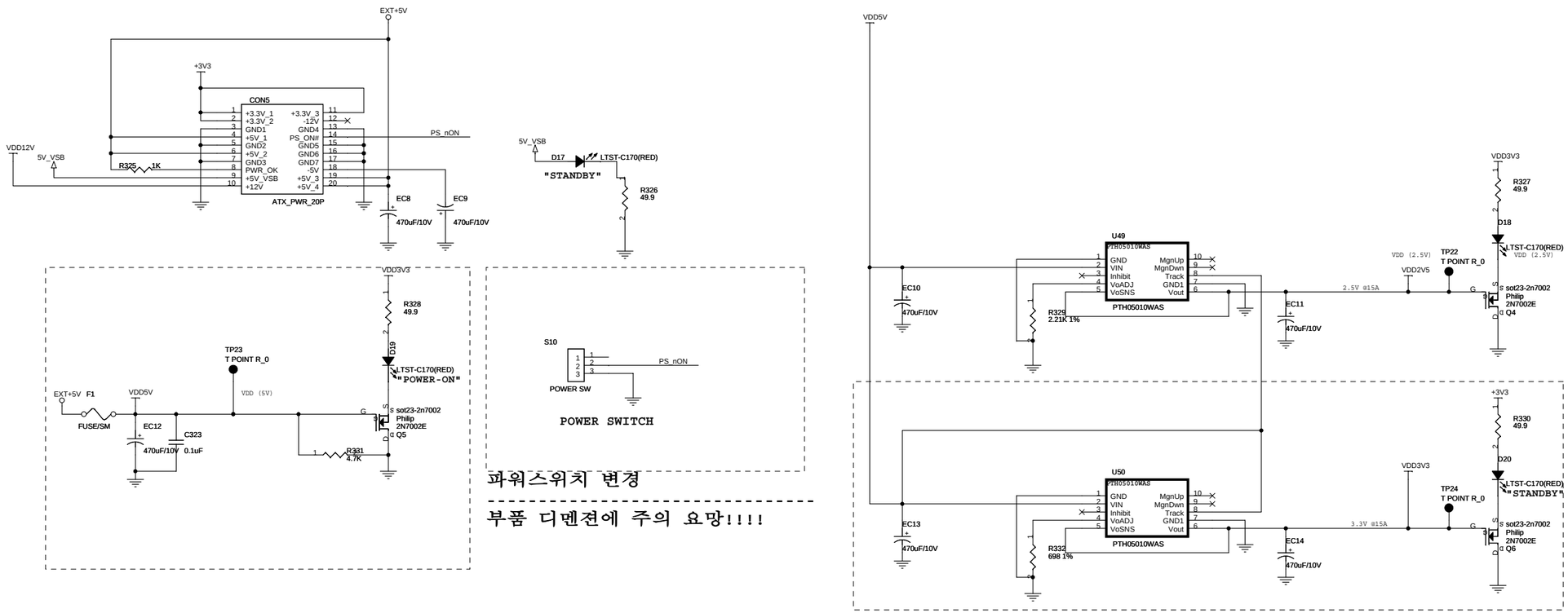

GND Point

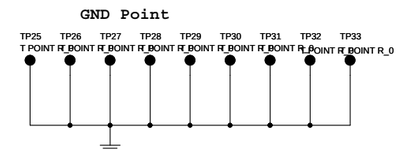

Title	SANGHWA FPGA PLATFORM SYSTEM POWER		
Size A2	Document Number <Doc>		Rev 1.0
Date: Wednesday, August 02, 2006	Sheet 13 of 26		

EXPANSION SLOT FOR FPGA #0

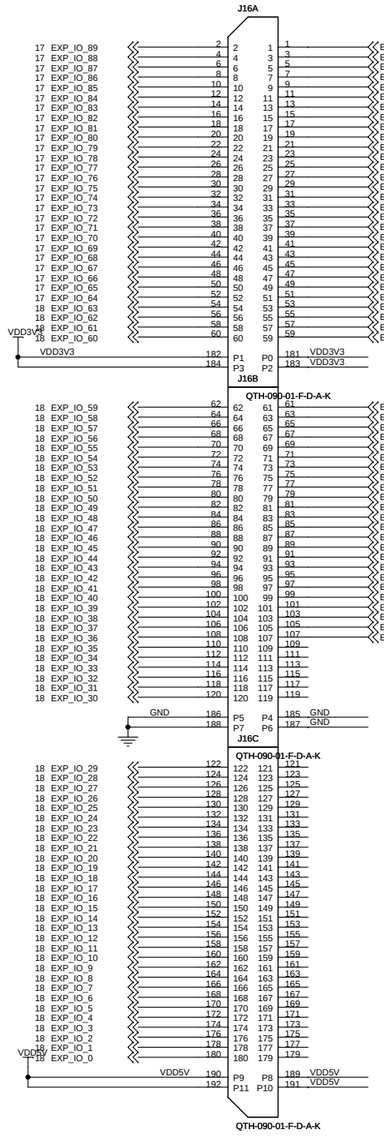

EXP2

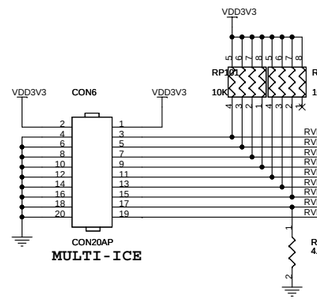

MULTI-ICE

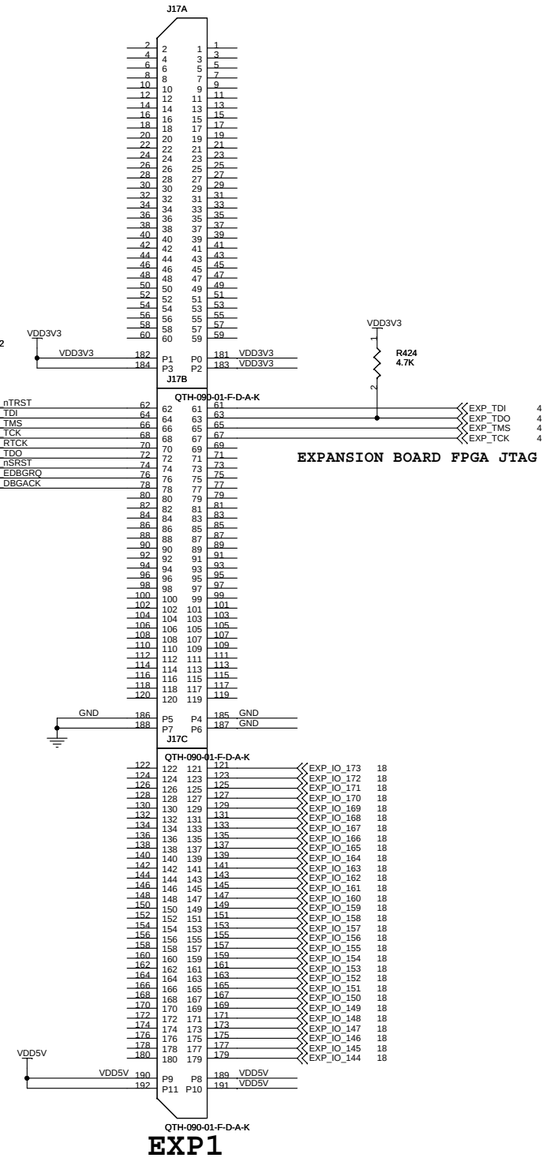

EXPANSION BOARD FPGA JTAG

EXP1

SANGHWA FPGA PLATFORM

Title		
FPGA #0 EXPANSION CONNECTOR		
Size A2	Document Number <Doc>	Rev 1.0
Date: Wednesday, August 02, 2006	Sheet 14 of 26	

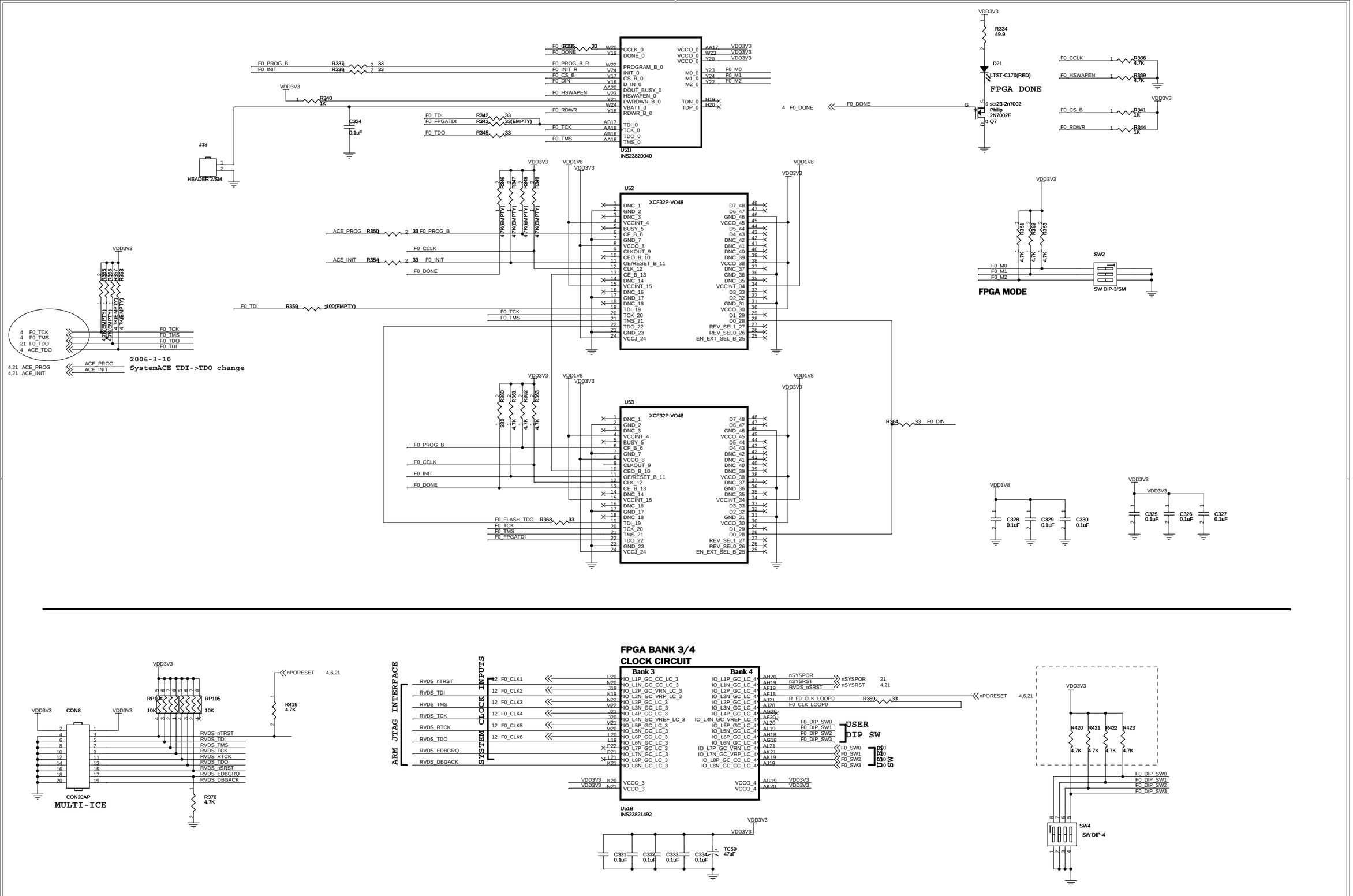
U51I
INS23820040
U52
XCF32P-VO48
U53
XCF32P-VO48
J18
HEADER 2/SM
R334
49.9
D21
LTST-C170(RED)
FPGA DONE
Q7
sot23-2n7002
Philip
2N7002E
SW2
SW DIP-3/SM
FPGA MODE
2006-3-10
SystemACE TDI->TDO change
FPGA BANK 3/4
CLOCK CIRCUIT
Bank 3
Bank 4
U51B
INS23821492
USER
DIP SW
USER
SW
SW4
SW DIP-4
CON8
CON20AP
MULTI-ICE
ARM JTAG INTERFACE
SYSTEM CLOCK INPUTS
SANGHWA FPGA PLATFORM
FPGA0 CONFIG/CLOCK
Size
A2
Document Number
<Doc>
Rev
1.0
Date: Wednesday, August 02, 2006
Sheet 15 of 26

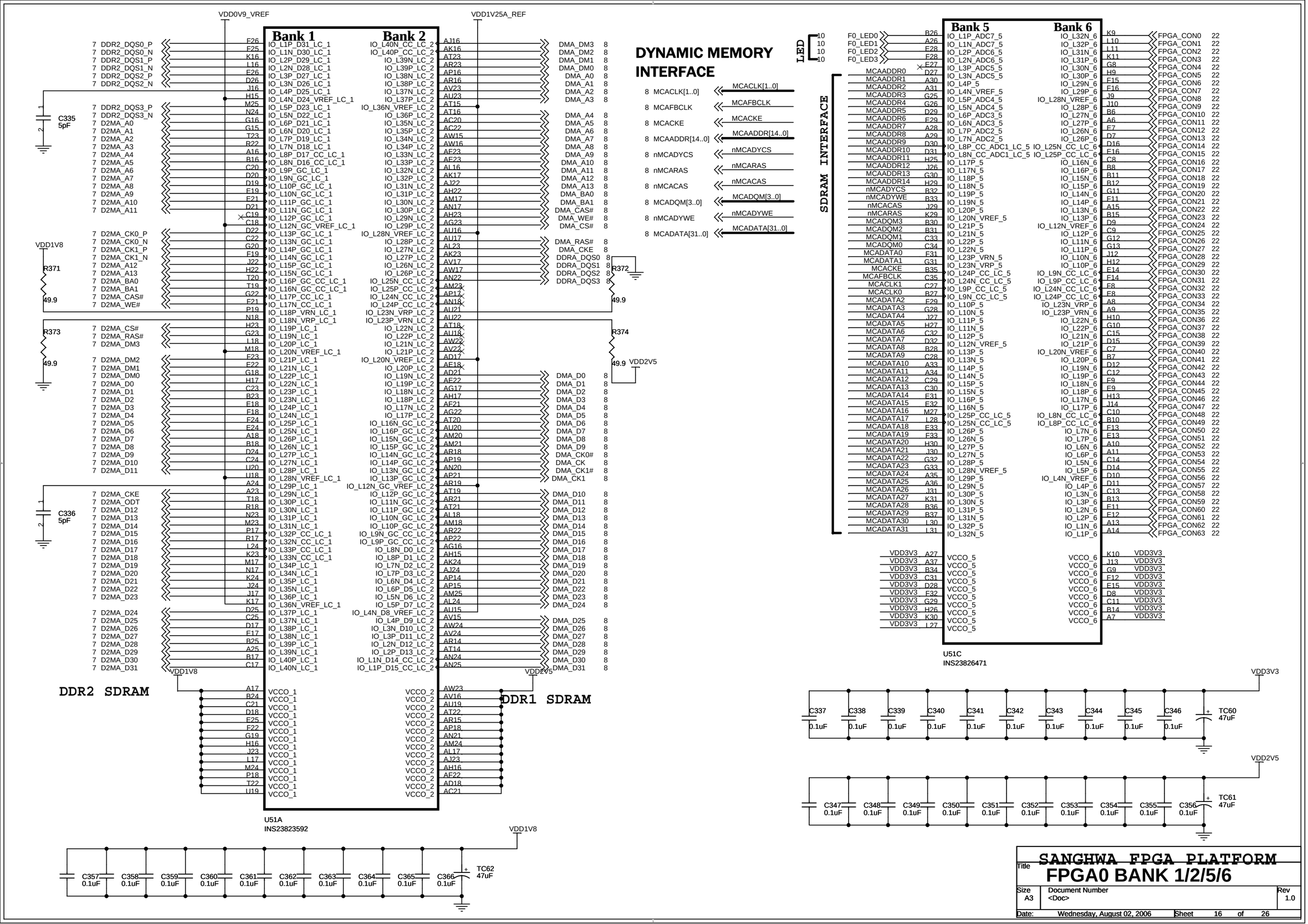
DYNAMIC MEMORY INTERFACE
SDRAM INTERFACE
LED
Bank 1
Bank 2
Bank 5
Bank 6
DDR2 SDRAM
DDR1 SDRAM
U51A
INS23823592
U51C
INS23826471
VDD0V9_VREF
VDD1V25A_REF
VDD1V8
VDD2V5
VDD3V3
C335 5pF
C336 5pF
R371 49.9
R372 49.9
R373 49.9
R374 49.9
TC60 47uF
TC61 47uF
TC62 47uF
SANGHWA FPGA PLATFORM
FPGA0 BANK 1/2/5/6
Size A3
Document Number <Doc>
Rev 1.0
Date: Wednesday, August 02, 2006
Sheet 16 of 26

FPGA INTERCONNECTION

Bank 7 / Bank 8

		Bank 7	Bank 8			
23 FPGA_CON384	AT33	IO_L1P_7	IO_L32N_8	AW10	FPGA_CON320	23
23 FPGA_CON385	AR33	IO_L1N_7	IO_L32P_8	AW11	FPGA_CON321	23
23 FPGA_CON386	AJ30	IO_L2P_7	IO_L31N_8	AV14	FPGA_CON322	23
23 FPGA_CON387	AK31	IO_L2N_7	IO_L31P_8	AW14	FPGA_CON323	23
23 FPGA_CON388	AM30	IO_L3P_7	IO_L30N_8	AU10	FPGA_CON324	23
23 FPGA_CON389	AL30	IO_L3N_7	IO_L30P_8	AV10	FPGA_CON325	23
23 FPGA_CON390	AM31	IO_L4P_7	IO_L29N_8	AR13	FPGA_CON326	23
23 FPGA_CON391	AL31	IO_L4N_VREF_7	IO_L29P_8	AT13	FPGA_CON327	23
23 FPGA_CON392	AP24	IO_L5P_7	IO_L28N_VREF_8	AR11	FPGA_CON328	23
23 FPGA_CON393	AR24	IO_L5N_7	IO_L28P_8	AT11	FPGA_CON329	23
23 FPGA_CON394	AP32	IO_L6P_7	IO_L27N_8	AM13	FPGA_CON330	23
23 FPGA_CON395	AN32	IO_L6N_7	IO_L27P_8	AN14	FPGA_CON331	23
23 FPGA_CON396	AN30	IO_L7P_7	IO_L26N_8	AV9	FPGA_CON332	23
23 FPGA_CON397	AP31	IO_L7N_7	IO_L26P_8	AW9	FPGA_CON333	23
23 FPGA_CON398	AK29	IO_L8P_CC_LC_7	IO_L25N_CC_LC_8	AV12	FPGA_CON334	23
23 FPGA_CON399	AJ29	IO_L8N_CC_LC_7	IO_L25P_CC_LC_8	AW12	FPGA_CON335	23
23 FPGA_CON400	AT24	IO_L9P_CC_LC_7	IO_L24N_CC_LC_8	AV7	FPGA_CON336	23
23 FPGA_CON401	AT25	IO_L9N_CC_LC_7	IO_L24P_CC_LC_8	AV8	FPGA_CON337	23
23 FPGA_CON402	AW34	IO_L10P_7	IO_L23N_VRP_8	AU11	FPGA_CON338	23
23 FPGA_CON403	AV34	IO_L10N_7	IO_L23P_VRN_8	AU12	FPGA_CON339	23
23 FPGA_CON404	AW30	IO_L11P_7	IO_L22N_8	AT9	FPGA_CON340	23
23 FPGA_CON405	AW31	IO_L11N_7	IO_L22P_8	AT10	FPGA_CON341	23
23 FPGA_CON406	AV33	IO_L12P_7	IO_L21N_8	AU13	FPGA_CON342	23
23 FPGA_CON407	AU33	IO_L12N_VREF_7	IO_L21P_8	AV13	FPGA_CON343	23
23 FPGA_CON408	AP25	IO_L13P_7	IO_L20N_VREF_8	AP9	FPGA_CON344	23
23 FPGA_CON409	AP26	IO_L13N_7	IO_L20P_8	AR9	FPGA_CON345	23
23 FPGA_CON410	AT31	IO_L14P_7	IO_L19N_8	AP12	FPGA_CON346	23
23 FPGA_CON411	AT30	IO_L14N_7	IO_L19P_8	AR12	FPGA_CON347	23
23 FPGA_CON412	AU25	IO_L15P_7	IO_L18N_8	AT8	FPGA_CON348	23
23 FPGA_CON413	AV25	IO_L15N_7	IO_L18P_8	AU8	FPGA_CON349	23
23 FPGA_CON414	AR31	IO_L16P_7	IO_L17N_8	AL13	FPGA_CON350	23
23 FPGA_CON415	AR32	IO_L16N_7	IO_L17P_8	AL14	FPGA_CON351	23
23 FPGA_CON416	AL26	IO_L17P_7	IO_L16N_8	AU6	FPGA_CON352	23
23 FPGA_CON417	AM27	IO_L17N_7	IO_L16P_8	AU7	FPGA_CON353	23
23 FPGA_CON418	AU31	IO_L18P_7	IO_L15N_8	AP11	FPGA_CON354	23
23 FPGA_CON419	AU32	IO_L18N_7	IO_L15P_8	AN12	FPGA_CON355	23
23 FPGA_CON420	AV28	IO_L19P_7	IO_L14N_8	AJ12	FPGA_CON356	23
23 FPGA_CON421	AU28	IO_L19N_7	IO_L14P_8	AH13	FPGA_CON357	23
23 FPGA_CON422	AW32	IO_L20P_7	IO_L13N_8	AN10	FPGA_CON358	23
23 FPGA_CON423	AV32	IO_L20N_VREF_7	IO_L13P_8	AM11	FPGA_CON359	23
23 FPGA_CON424	AW25	IO_L21P_7	IO_L12N_VREF_8	AL10	FPGA_CON360	23
23 FPGA_CON425	AW26	IO_L21N_7	IO_L12P_8	AM10	FPGA_CON361	23
23 FPGA_CON426	AP29	IO_L22P_7	IO_L11N_8	AW6	FPGA_CON362	23
23 FPGA_CON427	AN29	IO_L22N_7	IO_L11P_8	AW7	FPGA_CON363	23
23 FPGA_CON428	AN27	IO_L23P_VRN_7	IO_L10N_8	AW4	FPGA_CON364	23
23 FPGA_CON429	AN28	IO_L23N_VRP_7	IO_L10P_8	AW5	FPGA_CON365	23
23 FPGA_CON430	AL28	IO_L24P_CC_LC_7	IO_L9N_CC_LC_8	AK11	FPGA_CON366	23
23 FPGA_CON431	AM28	IO_L24N_CC_LC_7	IO_L9P_CC_LC_8	AL11	FPGA_CON367	23
23 FPGA_CON432	AP27	IO_L25P_CC_SM7_LC_7	IO_L8N_CC_LC_8	AV3	FPGA_CON368	23
23 FPGA_CON433	AR27	IO_L25N_CC_SM7_LC_7	IO_L8P_CC_LC_8	AV4	FPGA_CON369	23
23 FPGA_CON434	AV30	IO_L26P_SM6_7	IO_L7N_8	AR7	FPGA_CON370	23
23 FPGA_CON435	AU30	IO_L26N_SM6_7	IO_L7P_8	AR8	FPGA_CON371	23
23 FPGA_CON436	AR26	IO_L27P_SM5_7	IO_L6N_8	AN7	FPGA_CON372	23
23 FPGA_CON437	AT26	IO_L27N_SM5_7	IO_L6P_8	AP7	FPGA_CON373	23
23 FPGA_CON438	AW29	IO_L28P_7	IO_L5N_8	AN15	FPGA_CON374	23
23 FPGA_CON439	AV29	IO_L28N_VREF_7	IO_L5P_8	AM15	FPGA_CON375	23
23 FPGA_CON440	AV27	IO_L29P_SM4_7	IO_L4N_VREF_8	AK9	FPGA_CON376	23
23 FPGA_CON441	AW27	IO_L29N_SM4_7	IO_L4P_8	AL9	FPGA_CON377	23
23 FPGA_CON442	AT29	IO_L30P_SM3_7	IO_L3N_8	AN8	FPGA_CON378	23
23 FPGA_CON443	AR29	IO_L30N_SM3_7	IO_L3P_8	AN9	FPGA_CON379	23
23 FPGA_CON444	AU26	IO_L31P_SM2_7	IO_L2N_8	AJ9	FPGA_CON380	23
23 FPGA_CON445	AU27	IO_L31N_SM2_7	IO_L2P_8	AJ10	FPGA_CON381	23
23 FPGA_CON446	AT28	IO_L32P_SM1_7	IO_L1N_8	AU5	FPGA_CON382	23
23 FPGA_CON447	AR28	IO_L32N_SM1_7	IO_L1P_8	AV5	FPGA_CON383	23
VDD3V3	AK30	VCCO_7	VCCO_8	AW3	VDD3V3	
VDD3V3	AL27	VCCO_7	VCCO_8	AW13	VDD3V3	
VDD3V3	AN31	VCCO_7	VCCO_8	AV6	VDD3V3	
VDD3V3	AP28	VCCO_7	VCCO_8	AU9	VDD3V3	
VDD3V3	AR25	VCCO_7	VCCO_8	AT12	VDD3V3	
VDD3V3	AT32	VCCO_7	VCCO_8	AP8	VDD3V3	
VDD3V3	AU29	VCCO_7	VCCO_8	AN11	VDD3V3	
VDD3V3	AV26	VCCO_7	VCCO_8	AM14	VDD3V3	
VDD3V3	AW33	VCCO_7	VCCO_8	AK10	VDD3V3	
			VCCO_8	AJ13	VDD3V3	

U51D
INS23832289

Bank 9 / Bank 10

		Bank 9	Bank 10			
14 EXP_IO_64	D34	IO_L1P_9	IO_L32N_10	T11	FPGA_CON64	23
14 EXP_IO_65	D35	IO_L1N_9	IO_L32P_10	U12	FPGA_CON65	23
14 EXP_IO_66	C37	IO_L2P_9	IO_L31N_10	R8	FPGA_CON66	23
14 EXP_IO_67	C38	IO_L2N_9	IO_L31P_10	R9	FPGA_CON67	23
14 EXP_IO_68	E34	IO_L3P_9	IO_L30N_10	P7	FPGA_CON68	23
14 EXP_IO_69	F34	IO_L3N_9	IO_L30P_10	N7	FPGA_CON69	23
14 EXP_IO_70	E35	IO_L4P_9	IO_L29N_10	M6	FPGA_CON70	23
14 EXP_IO_71	G35	IO_L4N_VREF_9	IO_L29P_10	L6	FPGA_CON71	23
14 EXP_IO_72	D36	IO_L5P_9	IO_L28N_VREF_10	N8	FPGA_CON72	23
14 EXP_IO_73	D37	IO_L5N_9	IO_L28P_10	P9	FPGA_CON73	23
14 EXP_IO_74	H33	IO_L6P_9	IO_L27N_10	M7	FPGA_CON74	23
14 EXP_IO_75	H34	IO_L6N_9	IO_L27P_10	M8	FPGA_CON75	23
14 EXP_IO_76	E36	IO_L7P_9	IO_L26N_10	U13	FPGA_CON76	23
14 EXP_IO_77	F36	IO_L7N_9	IO_L26P_10	T13	FPGA_CON77	23
14 EXP_IO_78	C39	IO_L8P_CC_LC_9	IO_L25N_CC_LC_10	R11	FPGA_CON78	23
14 EXP_IO_79	D39	IO_L8N_CC_LC_9	IO_L25P_CC_LC_10	P11	FPGA_CON79	23
14 EXP_IO_80	J32	IO_L9P_CC_LC_9	IO_L24N_CC_LC_10	G1	FPGA_CON80	23
14 EXP_IO_81	K32	IO_L9N_CC_LC_9	IO_L24P_CC_LC_10	F1	FPGA_CON81	23
14 EXP_IO_82	G36	IO_L10P_9	IO_L23N_VRP_10	K6	FPGA_CON82	23
14 EXP_IO_83	G37	IO_L10N_9	IO_L23P_VRN_10	J6	FPGA_CON83	23
14 EXP_IO_84	E37	IO_L11P_9	IO_L22N_10	G2	FPGA_CON84	23
14 EXP_IO_85	E38	IO_L11N_9	IO_L22P_10	G3	FPGA_CON85	23
14 EXP_IO_86	H35	IO_L12P_9	IO_L21N_10	J5	FPGA_CON86	23
14 EXP_IO_87	J35	IO_L12N_VREF_9	IO_L21P_10	H5	FPGA_CON87	23
14 EXP_IO_88	M30	IO_L13P_9	IO_L20N_VREF_10	L8	FPGA_CON88	23
14 EXP_IO_89	M31	IO_L13N_9	IO_L20P_10	K7	FPGA_CON89	23
14 EXP_IO_90	E39	IO_L14P_9	IO_L19N_10	R12	FPGA_CON90	23
14 EXP_IO_91	F39	IO_L14N_9	IO_L19P_10	P12	FPGA_CON91	23
14 EXP_IO_92	J34	IO_L15P_9	IO_L18N_10	E1	FPGA_CON92	23
14 EXP_IO_93	K34	IO_L15N_9	IO_L18P_10	E2	FPGA_CON93	23
14 EXP_IO_94	E38	IO_L16P_9	IO_L17N_10	T14	FPGA_CON94	23
14 EXP_IO_95	G38	IO_L16N_9	IO_L17P_10	R14	FPGA_CON95	23
14 EXP_IO_96	K33	IO_L17P_9	IO_L16N_10	D1	FPGA_CON96	23
14 EXP_IO_97	L33	IO_L17N_9	IO_L16P_10	D2	FPGA_CON97	23
14 EXP_IO_98	H37	IO_L18P_9	IO_L15N_10	E3	FPGA_CON98	23
14 EXP_IO_99	H38	IO_L18N_9	IO_L15P_10	E4	FPGA_CON99	23
14 EXP_IO_100	N30	IO_L19P_9	IO_L14N_10	N10	FPGA_CON100	23
14 EXP_IO_101	P29	IO_L19N_9	IO_L14P_10	M10	FPGA_CON101	23
14 EXP_IO_102	L34	IO_L20P_9	IO_L13N_10	T15	FPGA_CON102	23
14 EXP_IO_103	L35	IO_L20N_VREF_9	IO_L13P_10	R16	FPGA_CON103	23
14 EXP_IO_104	J36	IO_L21P_9	IO_L12N_VREF_10	E3	FPGA_CON104	23
14 EXP_IO_105	J37	IO_L21N_9	IO_L12P_10	F4	FPGA_CON105	23
14 EXP_IO_106	K36	IO_L22P_9	IO_L11N_10	N12	FPGA_CON106	23
14 EXP_IO_107	L36	IO_L22N_9	IO_L11P_10	M11	FPGA_CON107	23
14 EXP_IO_108	H39	IO_L23P_VRN_9	IO_L10N_10	G5	FPGA_CON108	23
14 EXP_IO_109	J39	IO_L23N_VRP_9	IO_L10P_10	F5	FPGA_CON109	23
14 EXP_IO_110	M33	IO_L24P_CC_LC_9	IO_L9N_CC_LC_10	G6	FPGA_CON110	23
14 EXP_IO_111	N32	IO_L24N_CC_LC_9	IO_L9P_CC_LC_10	G7	FPGA_CON111	23
14 EXP_IO_112	R28	IO_L25P_CC_LC_9	IO_L8N_CC_LC_10	J7	FPGA_CON112	23
14 EXP_IO_113	R29	IO_L25N_CC_LC_9	IO_L8P_CC_LC_10	H7	FPGA_CON113	23
14 EXP_IO_114	M35	IO_L26P_9	IO_L7N_10	F6	FPGA_CON114	23
14 EXP_IO_115	N35	IO_L26N_9	IO_L7P_10	E6	FPGA_CON115	23
14 EXP_IO_116	K37	IO_L27P_9	IO_L6N_10	C2	FPGA_CON116	23
14 EXP_IO_117	K38	IO_L27N_9	IO_L6P_10	C3	FPGA_CON117	23
14 EXP_IO_118	N33	IO_L28P_9	IO_L5N_10	D5	FPGA_CON118	23
14 EXP_IO_119	N34	IO_L28N_VREF_9	IO_L5P_10	D6	FPGA_CON119	23
14 EXP_IO_120	P31	IO_L29P_9	IO_L4N_VREF_10	D4	FPGA_CON120	23
14 EXP_IO_121	P32	IO_L29N_9	IO_L4P_10	C4	FPGA_CON121	23
14 EXP_IO_122	K39	IO_L30P_9	IO_L3N_10	C5	FPGA_CON122	23
14 EXP_IO_123	L39	IO_L30N_9	IO_L3P_10	B5	FPGA_CON123	23
14 EXP_IO_124	L38	IO_L31P_9	IO_L2N_10	B3	FPGA_CON124	23
14 EXP_IO_125	M38	IO_L31N_9	IO_L2P_10	A3	FPGA_CON125	23
14 EXP_IO_126	M36	IO_L32P_9	IO_L1N_10	A4	FPGA_CON126	23
14 EXP_IO_127	M37	IO_L32N_9	IO_L1P_10	A5	FPGA_CON127	23
VDD3V3	D38	VCCO_9	VCCO_10	T12	VDD3V3	
VDD3V3	E35	VCCO_9	VCCO_10	R15	VDD3V3	
VDD3V3	G39	VCCO_9	VCCO_10	P8	VDD3V3	
VDD3V3	H36	VCCO_9	VCCO_10	N11	VDD3V3	
VDD3V3	J33	VCCO_9	VCCO_10	L7	VDD3V3	
VDD3V3	L37	VCCO_9	VCCO_10	H6	VDD3V3	
VDD3V3	M34	VCCO_9	VCCO_10	F2	VDD3V3	
VDD3V3	N31	VCCO_9	VCCO_10	F5	VDD3V3	
VDD3V3	P28	VCCO_9	VCCO_10	C1	VDD3V3	
			VCCO_10	B4	VDD3V3	

U51E
INS23834214

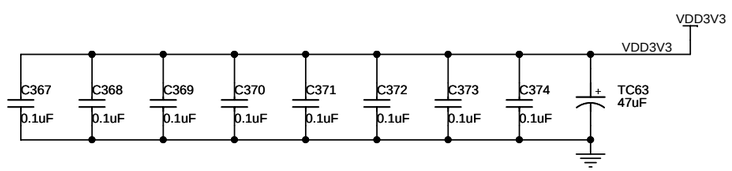

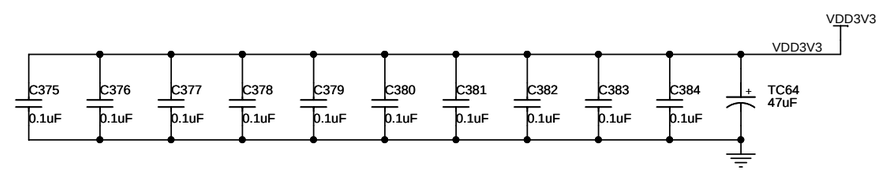

Title	SANGHWA FPGA PLATFORM FPGA0 BANK 7/8/9/10		
Size A3	Document Number <Doc>		Rev 1.0
Date: Wednesday, August 02, 2006	Sheet 17 of 26		

FPGA INTERCONNECTION

SSRAM INTERFACE

8 SMA_nOE

NAND FLASH

8 NDAREADY	AF33	IO_L1P_11	IO_L32N_12	AT3	FPGA_CON256 24
8 NDARE	AC28	IO_L1N_11	IO_L32P_12	AU3	FPGA_CON257 24
8 NDACE	AD29	IO_L2P_11	IO_L31N_12	AT5	FPGA_CON258 24
8 NDACLE	AD27	IO_L2N_11	IO_L31P_12	AT6	FPGA_CON259 24
8 NDAALE	AC27	IO_L3P_11	IO_L30N_12	AP4	FPGA_CON260 24
8 NDAnWE	AE31	IO_L3N_11	IO_L30P_12	AP5	FPGA_CON261 24
8 NDA_D7	AE32	IO_L4P_11	IO_L29N_12	AP6	FPGA_CON262 24
8 NDA_D6	AD26	IO_L4N_VREF_11	IO_L29P_12	AR6	FPGA_CON263 24
8 NDA_D5	AE26	IO_L5P_11	IO_L28N_VREF_12	AM6	FPGA_CON264 24
8 NDA_D4	AE31	IO_L5N_11	IO_L28P_12	AM7	FPGA_CON265 24
8 NDA_D3	AG32	IO_L6P_11	IO_L27N_12	AR4	FPGA_CON266 24
8 NDA_D2	AH32	IO_L6N_11	IO_L27P_12	AT4	FPGA_CON267 24
8 NDA_D1	AH33	IO_L7P_11	IO_L26N_12	AR2	FPGA_CON268 24
8 NDA_D0	AJ34	IO_L7N_11	IO_L26P_12	AR3	FPGA_CON269 24
	AH34	IO_L8P_CC_LC_11	IO_L25N_CC_LC_12	AU1	FPGA_CON270 24
	AD25	IO_L8N_CC_LC_11	IO_L25P_CC_LC_12	AU2	FPGA_CON271 24
	AE24	IO_L9P_CC_LC_11	IO_L24N_CC_LC_12	AR1	FPGA_CON272 24
		IO_L9N_CC_LC_11	IO_L24P_CC_LC_12	AT1	FPGA_CON273 24
14 EXP_IO_173	AE28	IO_L10P_11	IO_L23N_VRP_12	AK8	FPGA_CON274 24
14 EXP_IO_172	AE29	IO_L10N_11	IO_L23P_VRN_12	AL8	FPGA_CON275 24
14 EXP_IO_171	AL34	IO_L11P_11	IO_L22N_12	AL5	FPGA_CON276 24
14 EXP_IO_170	AK34	IO_L11N_11	IO_L22P_12	AM5	FPGA_CON277 24
14 EXP_IO_169	AP39	IO_L12P_11	IO_L21N_12	AN4	FPGA_CON278 24
14 EXP_IO_168	AN39	IO_L12N_VREF_11	IO_L21P_12	AN5	FPGA_CON279 24
14 EXP_IO_167	AE28	IO_L13P_11	IO_L20N_VREF_12	AJ7	FPGA_CON280 24
14 EXP_IO_166	AF29	IO_L13N_11	IO_L20P_12	AK7	FPGA_CON281 24
14 EXP_IO_165	AN37	IO_L14P_11	IO_L19N_12	AH9	FPGA_CON282 24
14 EXP_IO_164	AN38	IO_L14N_11	IO_L19P_12	AH10	FPGA_CON283 24
14 EXP_IO_163	AH30	IO_L15P_11	IO_L18N_12	AN2	FPGA_CON284 24
14 EXP_IO_162	AG30	IO_L15N_11	IO_L18P_12	AN3	FPGA_CON285 24
14 EXP_IO_161	AK33	IO_L16P_11	IO_L17N_12	AK6	FPGA_CON286 24
14 EXP_IO_160	AJ32	IO_L16N_11	IO_L17P_12	AL6	FPGA_CON287 24
14 EXP_IO_159	AR37	IO_L17P_11	IO_L16N_12	AK4	FPGA_CON288 24
14 EXP_IO_158	AR38	IO_L17N_11	IO_L16P_12	AL4	FPGA_CON289 24
14 EXP_IO_157	AM35	IO_L18P_11	IO_L15N_12	AP1	FPGA_CON290 24
14 EXP_IO_156	AL35	IO_L18N_11	IO_L15P_12	AP2	FPGA_CON291 24
14 EXP_IO_155	AP35	IO_L19P_11	IO_L14N_12	AM1	FPGA_CON292 24
14 EXP_IO_154	AN35	IO_L19N_11	IO_L14P_12	AM2	FPGA_CON293 24
14 EXP_IO_153	AT39	IO_L20P_11	IO_L13N_12	AL3	FPGA_CON294 24
14 EXP_IO_152	AR39	IO_L20N_VREF_11	IO_L13P_12	AM3	FPGA_CON295 24
14 EXP_IO_151	AG28	IO_L21P_11	IO_L12N_VREF_12	AE11	FPGA_CON296 24
14 EXP_IO_150	AH29	IO_L21N_11	IO_L12P_12	AE12	FPGA_CON297 24
14 EXP_IO_149	AP36	IO_L22P_11	IO_L11N_12	AG10	FPGA_CON298 24
14 EXP_IO_148	AP37	IO_L22N_11	IO_L11P_12	AF11	FPGA_CON299 24
14 EXP_IO_147	AN33	IO_L23P_VRN_11	IO_L10N_12	AK2	FPGA_CON300 24
14 EXP_IO_146	AN34	IO_L23N_VRP_11	IO_L10P_12	AK3	FPGA_CON301 24
14 EXP_IO_145	AU38	IO_L24P_CC_LC_11	IO_L9N_CC_LC_12	AJ5	FPGA_CON302 24
14 EXP_IO_144	AT38	IO_L24N_CC_LC_11	IO_L9P_CC_LC_12	AJ6	FPGA_CON303 24
14 EXP_IO_143	AU35	IO_L25P_CC_LC_11	IO_L8N_CC_LC_12	AH4	FPGA_CON304 24
14 EXP_IO_142	AU36	IO_L25N_CC_LC_11	IO_L8P_CC_LC_12	AJ4	FPGA_CON305 24
14 EXP_IO_141	AM33	IO_L26P_11	IO_L7N_12	AH7	FPGA_CON306 24
14 EXP_IO_140	AL33	IO_L26N_11	IO_L7P_12	AG8	FPGA_CON307 24
14 EXP_IO_139	AT34	IO_L27P_11	IO_L6N_12	AF8	FPGA_CON308 24
14 EXP_IO_138	AT35	IO_L27N_11	IO_L6P_12	AF9	FPGA_CON309 24
14 EXP_IO_137	AT36	IO_L28P_11	IO_L5N_12	AK1	FPGA_CON310 24
14 EXP_IO_136	AR36	IO_L28N_VREF_11	IO_L5P_12	AL1	FPGA_CON311 24
14 EXP_IO_135	AW36	IO_L29P_11	IO_L4N_VREF_12	AJ1	FPGA_CON312 24
14 EXP_IO_134	AW37	IO_L29N_11	IO_L4P_12	AJ2	FPGA_CON313 24
14 EXP_IO_133	AV37	IO_L30P_11	IO_L3N_12	AG6	FPGA_CON314 24
14 EXP_IO_132	AU37	IO_L30N_11	IO_L3P_12	AG7	FPGA_CON315 24
14 EXP_IO_131	AW35	IO_L31P_11	IO_L2N_12	AH2	FPGA_CON316 24
14 EXP_IO_130	AV35	IO_L31N_11	IO_L2P_12	AH3	FPGA_CON317 24
14 EXP_IO_129	AR34	IO_L32P_11	IO_L1N_12	AG5	FPGA_CON318 24
14 EXP_IO_128	AP34	IO_L32N_11	IO_L1P_12	AH5	FPGA_CON319 24

VDD3V3	AD28	VCCO_11	VCCO_12	AT2	VDD3V3
VDD3V3	AE25	VCCO_11	VCCO_12	AR5	VDD3V3
VDD3V3	AE32	VCCO_11	VCCO_12	AN1	VDD3V3
VDD3V3	AG29	VCCO_11	VCCO_12	AM4	VDD3V3
VDD3V3	AJ33	VCCO_11	VCCO_12	AL7	VDD3V3
VDD3V3	AM34	VCCO_11	VCCO_12	AJ3	VDD3V3
VDD3V3	AP38	VCCO_11	VCCO_12	AH6	VDD3V3
VDD3V3	AR35	VCCO_11	VCCO_12	AG9	VDD3V3
VDD3V3	AU39	VCCO_11	VCCO_12	AF12	VDD3V3
VDD3V3	AV36	VCCO_11			

U51F
INS23839244

14 EXP_IO_0	R31	IO_L1P_13	IO_L32N_14	W12	FPGA_CON128 24
14 EXP_IO_1	R32	IO_L1N_13	IO_L32P_14	Y13	FPGA_CON129 24
14 EXP_IO_2	P34	IO_L2P_13	IO_L31N_14	Y11	FPGA_CON130 24
14 EXP_IO_3	P35	IO_L2N_13	IO_L31P_14	AA11	FPGA_CON131 24
14 EXP_IO_4	T29	IO_L3P_13	IO_L30N_14	Y9	FPGA_CON132 24
14 EXP_IO_5	U28	IO_L3N_13	IO_L30P_14	AA10	FPGA_CON133 24
14 EXP_IO_6	P36	IO_L4P_13	IO_L29N_14	W5	FPGA_CON134 24
14 EXP_IO_7	P37	IO_L4N_VREF_13	IO_L29P_14	W6	FPGA_CON135 24
14 EXP_IO_8	N37	IO_L5P_13	IO_L28N_VREF_14	W9	FPGA_CON136 24
14 EXP_IO_9	N38	IO_L5N_13	IO_L28P_14	W10	FPGA_CON137 24
14 EXP_IO_10	N39	IO_L6P_13	IO_L27N_14	W7	FPGA_CON138 24
14 EXP_IO_11	P39	IO_L6N_13	IO_L27P_14	V7	FPGA_CON139 24
14 EXP_IO_12	R34	IO_L7P_13	IO_L26N_14	U2	FPGA_CON140 24
14 EXP_IO_13	T34	IO_L7N_13	IO_L26P_14	U3	FPGA_CON141 24
14 EXP_IO_14	T31	IO_L8P_CC_LC_13	IO_L25N_CC_LC_14	U1	FPGA_CON142 24
14 EXP_IO_15	U30	IO_L8N_CC_LC_13	IO_L25P_CC_LC_14	T1	FPGA_CON143 24
14 EXP_IO_16	R36	IO_L9P_CC_LC_13	IO_L24N_CC_LC_14	V5	FPGA_CON144 24
14 EXP_IO_17	T36	IO_L9N_CC_LC_13	IO_L24P_CC_LC_14	U5	FPGA_CON145 24
14 EXP_IO_18	T33	IO_L10P_13	IO_L23N_VRP_14	V9	FPGA_CON146 24
14 EXP_IO_19	U32	IO_L10N_13	IO_L23P_VRN_14	V10	FPGA_CON147 24
14 EXP_IO_20	R37	IO_L11P_13	IO_L22N_14	U6	FPGA_CON148 24
14 EXP_IO_21	R38	IO_L11N_13	IO_L22P_14	U7	FPGA_CON149 24
14 EXP_IO_22	R39	IO_L12P_13	IO_L21N_14	T3	FPGA_CON150 24
14 EXP_IO_23	T39	IO_L12N_VREF_13	IO_L21P_14	T4	FPGA_CON151 24
14 EXP_IO_24	V25	IO_L13P_13	IO_L20N_VREF_14	R1	FPGA_CON152 24
14 EXP_IO_25	U26	IO_L13N_13	IO_L20P_14	R2	FPGA_CON153 24
14 EXP_IO_26	V27	IO_L14P_13	IO_L19N_14	T5	FPGA_CON154 24
14 EXP_IO_27	U27	IO_L14N_13	IO_L19P_14	T6	FPGA_CON155 24
14 EXP_IO_28	T35	IO_L15P_13	IO_L18N_14	R3	FPGA_CON156 24
14 EXP_IO_29	U35	IO_L15N_13	IO_L18P_14	R4	FPGA_CON157 24
14 EXP_IO_30	U33	IO_L16P_13	IO_L17N_14	T9	FPGA_CON158 24
14 EXP_IO_31	V33	IO_L16N_13	IO_L17P_14	U10	FPGA_CON159 24
14 EXP_IO_32	T38	IO_L17P_13	IO_L16N_14	P1	FPGA_CON160 24
14 EXP_IO_33	U38	IO_L17N_13	IO_L16P_14	P2	FPGA_CON161 24
14 EXP_IO_34	V29	IO_L18P_13	IO_L15N_14	U8	FPGA_CON162 24
14 EXP_IO_35	V30	IO_L18N_13	IO_L15P_14	T8	FPGA_CON163 24
14 EXP_IO_36	U36	IO_L19P_13	IO_L14N_14	V12	FPGA_CON164 24
14 EXP_IO_37	U37	IO_L19N_13	IO_L14P_14	V13	FPGA_CON165 24
14 EXP_IO_38	V32	IO_L20P_13	IO_L13N_14	N2	FPGA_CON166 24
14 EXP_IO_39	W32	IO_L20N_VREF_13	IO_L13P_14	N3	FPGA_CON167 24
14 EXP_IO_40	W26	IO_L21P_13	IO_L12N_VREF_14	P4	FPGA_CON168 24
14 EXP_IO_41	W27	IO_L21N_13	IO_L12P_14	P5	FPGA_CON169 24
14 EXP_IO_42	V34	IO_L22P_13	IO_L11N_14	R6	FPGA_CON170 24
14 EXP_IO_43	V35	IO_L22N_13	IO_L11P_14	P6	FPGA_CON171 24
14 EXP_IO_44	V37	IO_L23P_VRN_13	IO_L10N_14	M1	FPGA_CON172 24
14 EXP_IO_45	V38	IO_L23N_VRP_13	IO_L10P_14	L1	FPGA_CON173 24
14 EXP_IO_46	V39	IO_L24P_CC_LC_13	IO_L9N_CC_LC_14	N4	FPGA_CON174 24
14 EXP_IO_47	W39	IO_L24N_CC_LC_13	IO_L9P_CC_LC_14	N5	FPGA_CON175 24
14 EXP_IO_48	W34	IO_L25P_CC_LC_13	IO_L8N_CC_LC_14	M2	FPGA_CON176 24
14 EXP_IO_49	W35	IO_L25N_CC_LC_13	IO_L8P_CC_LC_14	M3	FPGA_CON177 24
14 EXP_IO_50	W36	IO_L26P_13	IO_L7N_14	L3	FPGA_CON178 24
14 EXP_IO_51	W37	IO_L26N_13	IO_L7P_14	L4	FPGA_CON179 24
14 EXP_IO_52	Y37	IO_L27P_13	IO_L6N_14	K1	FPGA_CON180 24
14 EXP_IO_53	Y38	IO_L27N_13	IO_L6P_14	K2	FPGA_CON181 24
14 EXP_IO_54	Y39	IO_L28P_13	IO_L5N_14	M5	FPGA_CON182 24
14 EXP_IO_55	AA39	IO_L28N_VREF_13	IO_L5P_14	L5	FPGA_CON183 24
14 EXP_IO_56	AA36	IO_L29P_13	IO_L4N_VREF_14	J1	FPGA_CON184 24
14 EXP_IO_57	Y36	IO_L29N_13	IO_L4P_14	J2	FPGA_CON185 24
14 EXP_IO_58	Y33	IO_L30P_13	IO_L3N_14	H2	FPGA_CON186 24
14 EXP_IO_59	Y34	IO_L30N_13	IO_L3P_14	H3	FPGA_CON187 24
14 EXP_IO_60	AB36	IO_L31P_13	IO_L2N_14	K3	FPGA_CON188 24
14 EXP_IO_61	AB37	IO_L31N_13	IO_L2P_14	K4	FPGA_CON189 24
14 EXP_IO_62	AB38	IO_L32P_13	IO_L1N_14	J4	FPGA_CON190 24
14 EXP_IO_63	AA38	IO_L32N_13	IO_L1P_14	H4	FPGA_CON191 24

VDD3V3	AA37	VCCO_13	VCCO_14	Y10	VDD3V3
VDD3V3	P38	VCCO_13	VCCO_14	W13	VDD3V3
VDD3V3	R35	VCCO_13	VCCO_14	V6	VDD3V3
VDD3V3	T32	VCCO_13	VCCO_14	U9	VDD3V3
VDD3V3	U29	VCCO_13	VCCO_14	T2	VDD3V3
VDD3V3	U39	VCCO_13	VCCO_14	R5	VDD3V3
VDD3V3	V26	VCCO_13	VCCO_14	N1	VDD3V3
VDD3V3	V36	VCCO_13	VCCO_14	M4	VDD3V3
VDD3V3	W33	VCCO_13	VCCO_14	J3	VDD3V3

U51G
INS23841562

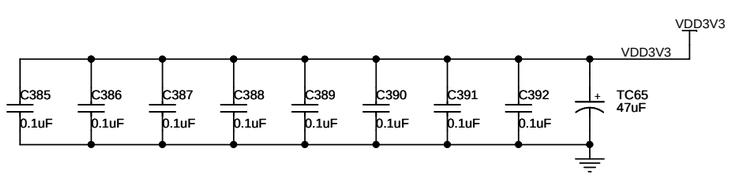

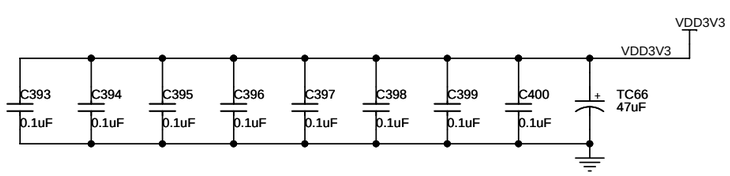

SANGHWA FPGA PLATFORM

Title: FPGA0 BANK 11/12/13/14

Size	Document Number	Rev
A3	<Doc>	1.0

Date: Wednesday, August 02, 2006 Sheet 18 of 26

VIRTEX-4 FPGA
POWER GROUND

GND	D13	GND	GND	J28	GND
GND	K13	GND	GND	N28	GND
GND	M13	GND	GND	W28	GND
GND	P13	GND	GND	AJ28	GND
GND	AD13	GND	GND	AW28	GND
GND	AF13	GND	GND	B29	GND
GND	AK13	GND	GND	M29	GND
GND	AP13	GND	GND	AB29	GND
GND	G14	GND	GND	AM29	GND
GND	L14	GND	GND	E30	GND
GND	N14	GND	GND	R30	GND
GND	U14	GND	GND	AF30	GND
GND	W14	GND	GND	AR30	GND
GND	AF14	GND	GND	H31	GND
GND	AG14	GND	GND	V31	GND
GND	AJ14	GND	GND	AH31	GND
GND	AU14	GND	GND	AV31	GND
GND	K15	GND	GND	A32	GND
GND	M15	GND	GND	L32	GND
GND	P15	GND	GND	AA32	GND
GND	V15	GND	GND	AL32	GND
GND	Y15	GND	GND	D33	GND
GND	AD15	GND	GND	P33	GND
GND	AF15	GND	GND	AD33	GND
GND	AK15	GND	GND	AP33	GND
GND	C16	GND	GND	G34	GND
GND	N16	GND	GND	U34	GND
GND	U16	GND	GND	AG34	GND
GND	W16	GND	GND	AU34	GND
GND	AC16	GND	GND	K35	GND
GND	AF16	GND	GND	Y35	GND
GND	AN16	GND	GND	AK35	GND
GND	F17	GND	GND	C36	GND
GND	T17	GND	GND	N36	GND
GND	V17	GND	GND	AC36	GND
GND	AF17	GND	GND	AN36	GND
GND	AT17	GND	GND	F37	GND
GND	J18	GND	GND	T37	GND
GND	W18	GND	GND	AF37	GND
GND	AC18	GND	GND	AT37	GND
GND	AJ18	GND	GND	A38	GND
GND	AW18	GND	GND	J38	GND
GND	B19	GND	GND	W38	GND
GND	M19	GND	GND	AJ38	GND
GND	V19	GND	GND	AW38	GND
GND	AB19	GND	GND	B39	GND
GND	AD19	GND	GND	M39	GND
GND	AM19	GND	GND	AB39	GND
GND	E20	GND	GND	AM39	GND
GND	R20	GND	GND	AV39	GND
GND	AF20	GND	GND	B1	GND
GND	AR20	GND	GND	H1	GND
GND	H21	GND	GND	V1	GND
GND	T21	GND	GND	AH1	GND
GND	V21	GND	GND	AV1	GND
GND	AB21	GND	GND	A2	GND
GND	AH21	GND	GND	L2	GND
GND	AV21	GND	GND	AA2	GND
GND	A22	GND	GND	AL2	GND
GND	L22	GND	GND	AW2	GND
GND	U22	GND	GND	D3	GND
GND	AA22	GND	GND	P3	GND
GND	AL22	GND	GND	AD3	GND
GND	D23	GND	GND	AP3	GND
GND	P23	GND	GND	G4	GND
GND	AB23	GND	GND	U4	GND
GND	AD23	GND	GND	AG4	GND
GND	AP23	GND	GND	AU4	GND
GND	G24	GND	GND	K5	GND
GND	R24	GND	GND	Y5	GND
GND	U24	GND	GND	AK5	GND
GND	AA24	GND	GND	C6	GND
GND	AC24	GND	GND	N6	GND
GND	AG24	GND	GND	AC6	GND
GND	AU24	GND	GND	AN6	GND
GND	K25	GND	GND	F7	GND
GND	P25	GND	GND	T7	GND
GND	T25	GND	GND	AF7	GND
GND	Y25	GND	GND	AT7	GND
GND	AB25	GND	GND	J8	GND
GND	AF25	GND	GND	W8	GND
GND	AH25	GND	GND	AJ8	GND
GND	AK25	GND	GND	AW8	GND
GND	C26	GND	GND	B9	GND
GND	L26	GND	GND	M9	GND
GND	N26	GND	GND	AB9	GND
GND	R26	GND	GND	AM9	GND
GND	AA26	GND	GND	E10	GND
GND	AC26	GND	GND	R10	GND
GND	AG26	GND	GND	AE10	GND
GND	AJ26	GND	GND	AR10	GND
GND	AN26	GND	GND	H11	GND
GND	F27	GND	GND	V11	GND
GND	K27	GND	GND	AH11	GND
GND	P27	GND	GND	AV11	GND
GND	T27	GND	GND	A12	GND
GND	AF27	GND	GND	L12	GND
GND	AH27	GND	GND	AA12	GND
GND	AK27	GND	GND	AG12	GND
GND	AT27	GND	GND	AL12	GND

U51K
INS23847039

SSRAM INTERFACE

8	SMA_A2	Y27	IO_L1P_15	IO_L32N_16	AF3	FPGA_CON192	25
8	SMA_A3	AA28	IO_L1N_15	IO_L32P_16	AG3	FPGA_CON193	25
8	SMA_A4	W29	IO_L2P_15	IO_L31N_16	AE8	FPGA_CON194	25
8	SMA_A5	W30	IO_L2N_15	IO_L31P_16	AE9	FPGA_CON195	25
8	SMA_A6	AA34	IO_L3P_15	IO_L30N_16	AG1	FPGA_CON196	25
8	SMA_A7	AA35	IO_L3N_15	IO_L30P_16	AG2	FPGA_CON197	25
8	SMA_A8	Y29	IO_L4P_15	IO_L29N_16	AF5	FPGA_CON198	25
8	SMA_A9	AA30	IO_L4N_VREF_15	IO_L29P_16	AF6	FPGA_CON199	25
8	SMA_A10	AC38	IO_L5P_15	IO_L28N_VREF_16	AD6	FPGA_CON200	25
8	SMA_A11	AC39	IO_L5N_15	IO_L28P_16	AF6	FPGA_CON201	25
8	SMA_A12	AA31	IO_L6P_15	IO_L27N_16	AF4	FPGA_CON202	25
8	SMA_A13	Y31	IO_L6N_15	IO_L27P_16	AF4	FPGA_CON203	25
8	SMA_A14	AC35	IO_L7P_15	IO_L26N_16	AF1	FPGA_CON204	25
8	SMA_A15	AB35	IO_L7N_15	IO_L26P_16	AF1	FPGA_CON205	25
8	SMA_A16	AB33	IO_L8P_CC_LC_15	IO_L25N_CC_LC_16	AD11	FPGA_CON206	25
8	SMA_A17	AA33	IO_L8N_CC_LC_15	IO_L25P_CC_LC_16	AC12	FPGA_CON207	25
8	SMA_A18	AC33	IO_L9P_CC_LC_15	IO_L24N_CC_LC_16	AE2	FPGA_CON208	25
8	SMA_A19	AC34	IO_L9N_CC_LC_15	IO_L24P_CC_LC_16	AE3	FPGA_CON209	25
8	SMA_A20	AD37	IO_L10P_15	IO_L23N_VRP_16	AC7	FPGA_CON210	25
8	SMA_nADSC	AC37	IO_L10N_15	IO_L23P_VRN_16	AD7	FPGA_CON211	25
8	SMA_nADSP	AC32	IO_L11P_15	IO_L22N_16	AD9	FPGA_CON212	25
8	SMA_nADV	AB31	IO_L11N_15	IO_L22P_16	AC10	FPGA_CON213	25
8	SMA_nBW1	AE39	IO_L12P_15	IO_L21N_16	AC14	FPGA_CON214	25
8	SMA_nBW2	AD39	IO_L12N_VREF_15	IO_L21P_16	AB15	FPGA_CON215	25
8	SMA_nBW3	AE38	IO_L13P_15	IO_L20N_VREF_16	AC13	FPGA_CON216	25
8	SMA_nBW4	AE39	IO_L13N_15	IO_L20P_16	AB13	FPGA_CON217	25
8	SMA_nBWE	AD35	IO_L14P_15	IO_L19N_16	AD4	FPGA_CON218	25
8	SMA_nCE	AD36	IO_L14N_15	IO_L19P_16	AD5	FPGA_CON219	25
8	SMA_CLK	AC30	IO_L15P_15	IO_L18N_16	AD1	FPGA_CON220	25
8	SMA_nCS1	AB30	IO_L15N_15	IO_L18P_16	AD2	FPGA_CON221	25
8	SMA_nGW	AE37	IO_L16P_15	IO_L17N_16	AB8	FPGA_CON222	25
8	SMA_nLBO	AE38	IO_L16N_15	IO_L17P_16	AC8	FPGA_CON223	25
8	SMA_D31	AB27	IO_L17P_15	IO_L16N_16	AC4	FPGA_CON224	25
8	SMA_D30	AB28	IO_L17N_15	IO_L16P_16	AC5	FPGA_CON225	25
8	SMA_D29	AE34	IO_L18P_15	IO_L15N_16	AB10	FPGA_CON226	25
8	SMA_D28	AD34	IO_L18N_15	IO_L15P_16	AB11	FPGA_CON227	25
8	SMA_D27	AD31	IO_L19P_15	IO_L14N_16	AA8	FPGA_CON228	25
8	SMA_D26	AD32	IO_L19N_15	IO_L14P_16	AB7	FPGA_CON229	25
8	SMA_D25	AE36	IO_L20P_15	IO_L13N_16	AC2	FPGA_CON230	25
8	SMA_D24	AE36	IO_L20N_VREF_15	IO_L13P_16	AC3	FPGA_CON231	25
8	SMA_D23	AJ39	IO_L21P_15	IO_L12N_VREF_16	AB1	FPGA_CON232	25
8	SMA_D22	AH39	IO_L21N_15	IO_L12P_16	AB2	FPGA_CON233	25
8	SMA_D21	AG37	IO_L22P_15	IO_L11N_16	AB5	FPGA_CON234	25
8	SMA_D20	AG38	IO_L22N_15	IO_L11P_16	AB6	FPGA_CON235	25
8	SMA_D19	AH37	IO_L23P_VRN_15	IO_L10N_16	AA5	FPGA_CON236	25
8	SMA_D18	AH38	IO_L23N_VRP_15	IO_L10P_16	AA6	FPGA_CON237	25
8	SMA_D17	AF34	IO_L24P_CC_LC_15	IO_L9N_CC_LC_16	AA13	FPGA_CON238	25
8	SMA_D16	AF35	IO_L24N_CC_LC_15	IO_L9P_CC_LC_16	AA14	FPGA_CON239	25
8	SMA_D15	AJ36	IO_L25P_CC_LC_15	IO_L8N_CC_LC_16	AA1	FPGA_CON240	25
8	SMA_D14	AJ37	IO_L25N_CC_LC_15	IO_L8P_CC_LC_16	Y1	FPGA_CON241	25
8	SMA_D13	AG35	IO_L26P_15	IO_L7N_16	AB3	FPGA_CON242	25
8	SMA_D12	AG36	IO_L26N_15	IO_L7P_16	AA3	FPGA_CON243	25
8	SMA_D11	AJ35	IO_L27P_15	IO_L6N_16	Y2	FPGA_CON244	25
8	SMA_D10	AH35	IO_L27N_15	IO_L6P_16	Y3	FPGA_CON245	25
8	SMA_D9	AK38	IO_L28P_15	IO_L5N_16	AA4	FPGA_CON246	25
8	SMA_D8	AK39	IO_L28N_VREF_15	IO_L5P_16	Y4	FPGA_CON247	25
8	SMA_D7	AM37	IO_L29P_15	IO_L4N_VREF_16	Y6	FPGA_CON248	25
8	SMA_D6	AM38	IO_L29N_15	IO_L4P_16	Y7	FPGA_CON249	25
8	SMA_D5	AL38	IO_L30P_15	IO_L3N_16	W1	FPGA_CON250	25
8	SMA_D4	AL39	IO_L30N_15	IO_L3P_16	W2	FPGA_CON251	25
8	SMA_D3	AM36	IO_L31P_15	IO_L2N_16	V2	FPGA_CON252	25
8	SMA_D2	AL36	IO_L31N_15	IO_L2P_16	V3	FPGA_CON253	25
8	SMA_D1	AK36	IO_L32P_15	IO_L1N_16	W4	FPGA_CON254	25
8	SMA_D0	AK37	IO_L32N_15	IO_L1P_16	V4	FPGA_CON255	25

Bank 15 **Bank 16**

VDD3V3	AA27	VCCO_15	VCCO_16	W3	VDD3V3
VDD3V3	AB34	VCCO_15	VCCO_16	AF2	VDD3V3
VDD3V3	AC31	VCCO_15	VCCO_16	AE5	VDD3V3
VDD3V3	AD38	VCCO_15	VCCO_16	AD8	VDD3V3
VDD3V3	AE35	VCCO_15	VCCO_16	AC11	VDD3V3
VDD3V3	AG39	VCCO_15	VCCO_16	AC1	VDD3V3
VDD3V3	AH36	VCCO_15	VCCO_16	AB4	VDD3V3
VDD3V3	AL37	VCCO_15	VCCO_16	AB14	VDD3V3
VDD3V3	Y30	VCCO_15	VCCO_16	AA7	VDD3V3

U51H
INS28868288

VDD3V3

VDD3V3

C401	C402	C403	C404	C405	C406	C407	C408	TC67
0.1uF	0.1uF	0.1uF	0.1uF	0.1uF	0.1uF	0.1uF	0.1uF	47uF

Title	SANGHWA FPGA PLATFORM FPGA0 BANK 15/16/GND
Size A3	Document Number <Doc>
Rev	1.0
Date:	Wednesday, August 02, 2006
Sheet	19 of 26

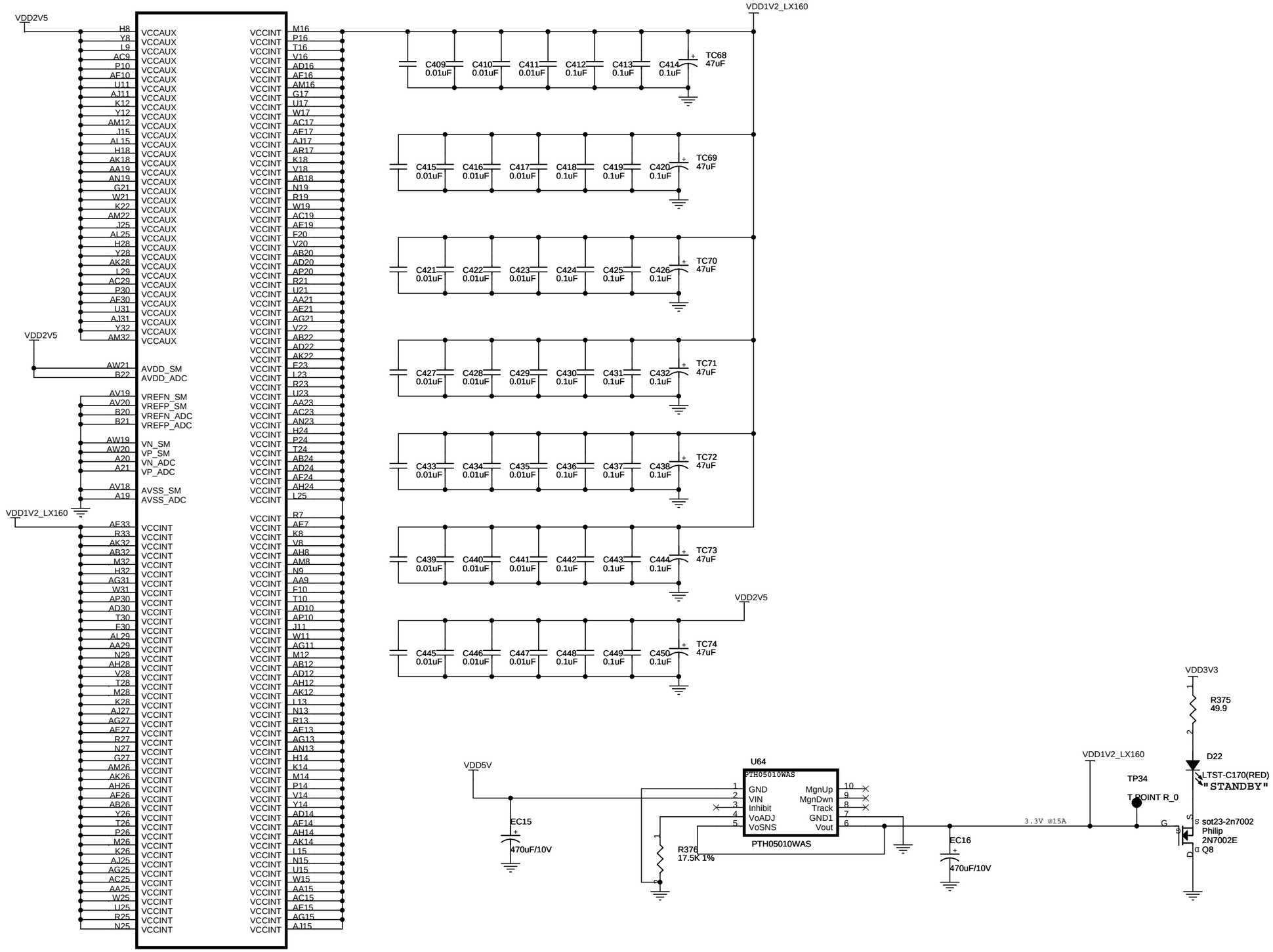

SANGHWA FPGA PLATFORM

Title **FPGA0 POWER VCCO**

Size	Document Number	Rev
A3	<Doc>	1.0

Date: Wednesday, August 02, 2006 Sheet 20 of 26

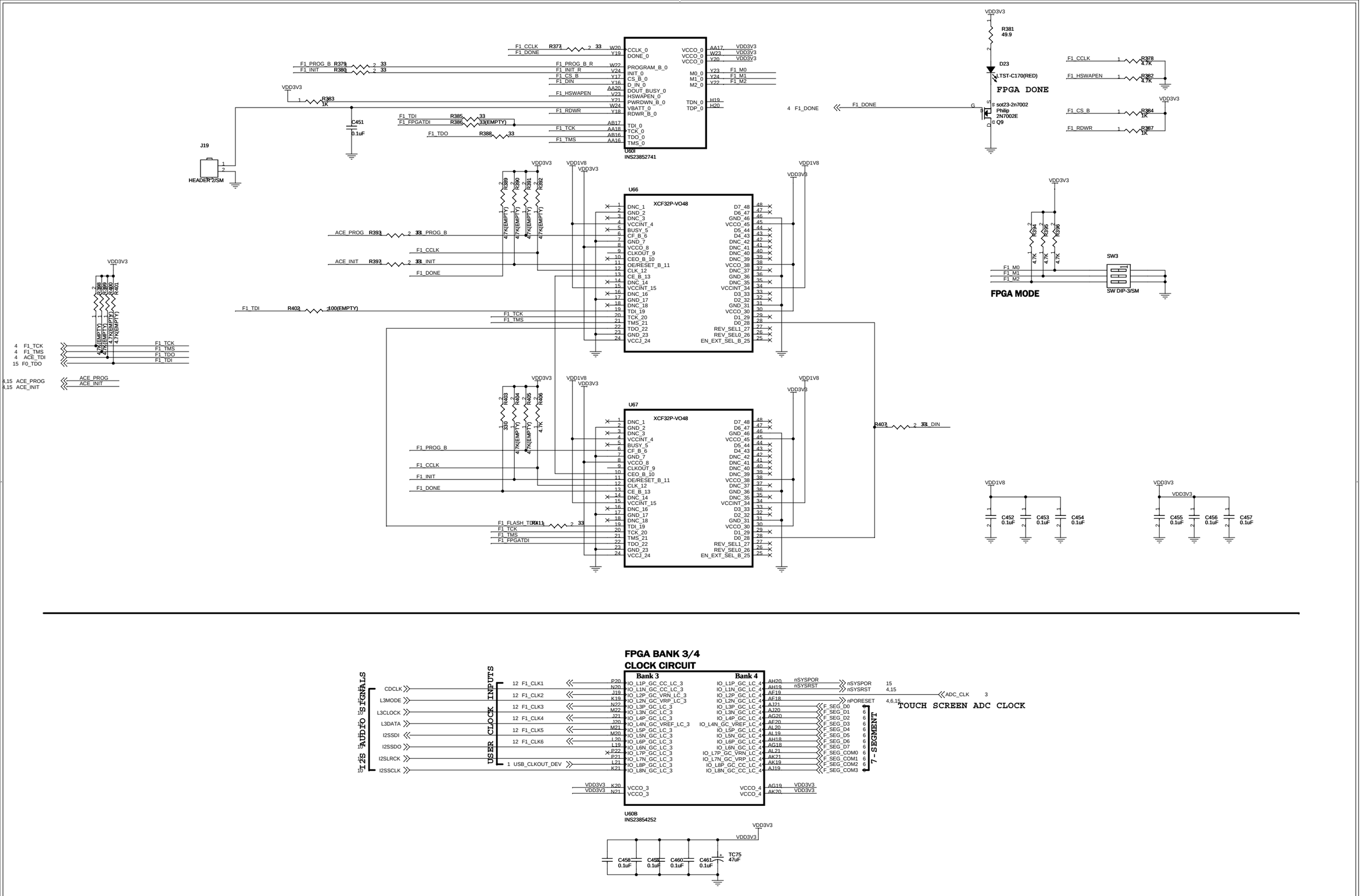
U60I
INS23852741
U66
XCF32P-VO48
U67
XCF32P-VO48
FPGA DONE
FPGA MODE
SW3
SW DIP-3/SM
J19
HEADER 2/SM
FPGA BANK 3/4
CLOCK CIRCUIT
Bank 3
Bank 4
U60B
INS23854252
USER CLOCK INPUTS
AUDIO SIGNALS
7-SEGMENT
TOUCH SCREEN ADC CLOCK
SANGHWA FPGA PLATFORM
FPGA1 CONFIG/CLOCK
Size A2
Document Number <Doc>
Rev 1.0
Date: Wednesday, August 02, 2006
Sheet 21 of 26

DYNAMIC MEMORY INTERFACE

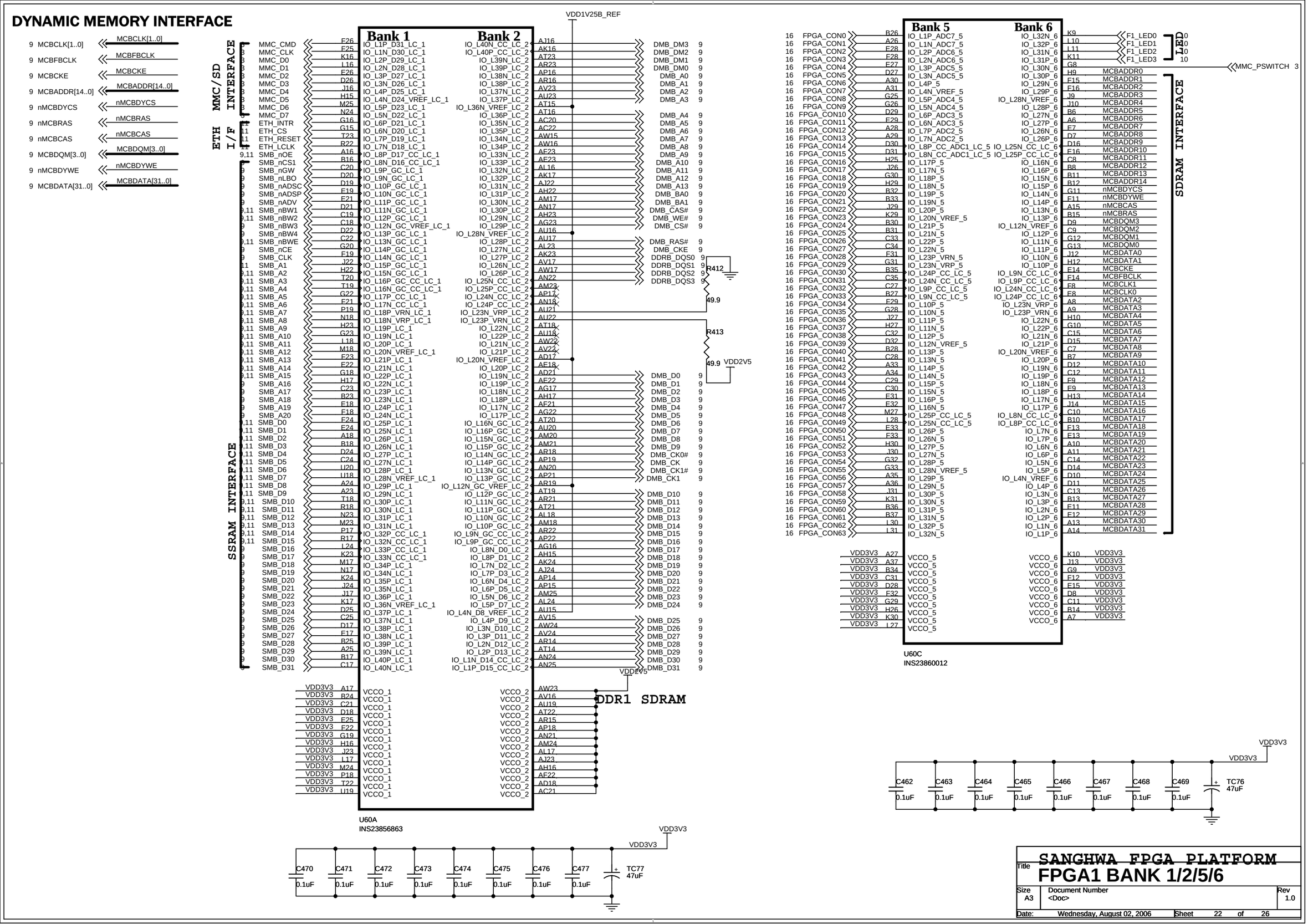

SANGHWA FPGA PLATFORM

Title: FPGA1 BANK 1/2/5/6

Size	Document Number	Rev
A3	<Doc>	1.0

Date: Wednesday, August 02, 2006 Sheet 22 of 26

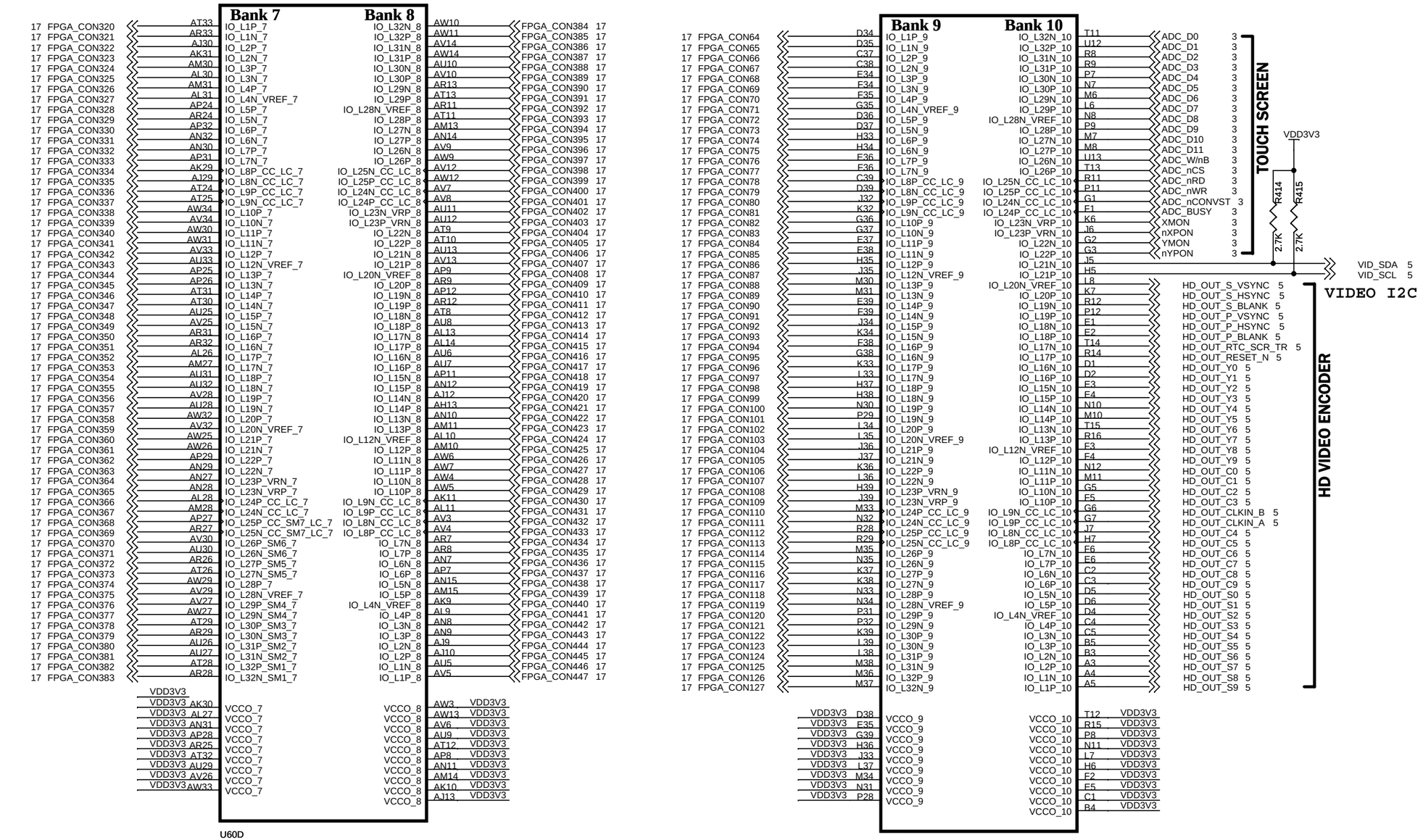

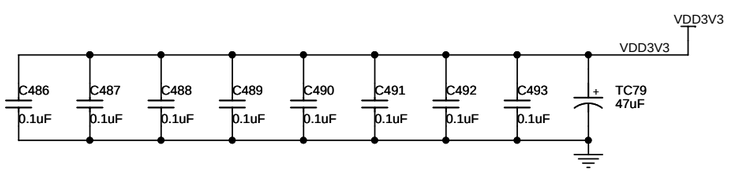

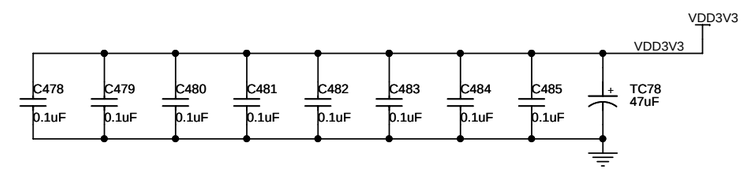

SANGHWA FPGA PLATFORM

Title **FPGA1 BANK 7/8/9/10**

Size	Document Number	Rev
A3	<Doc>	1.0

Date: Wednesday, August 02, 2006 Sheet 23 of 26

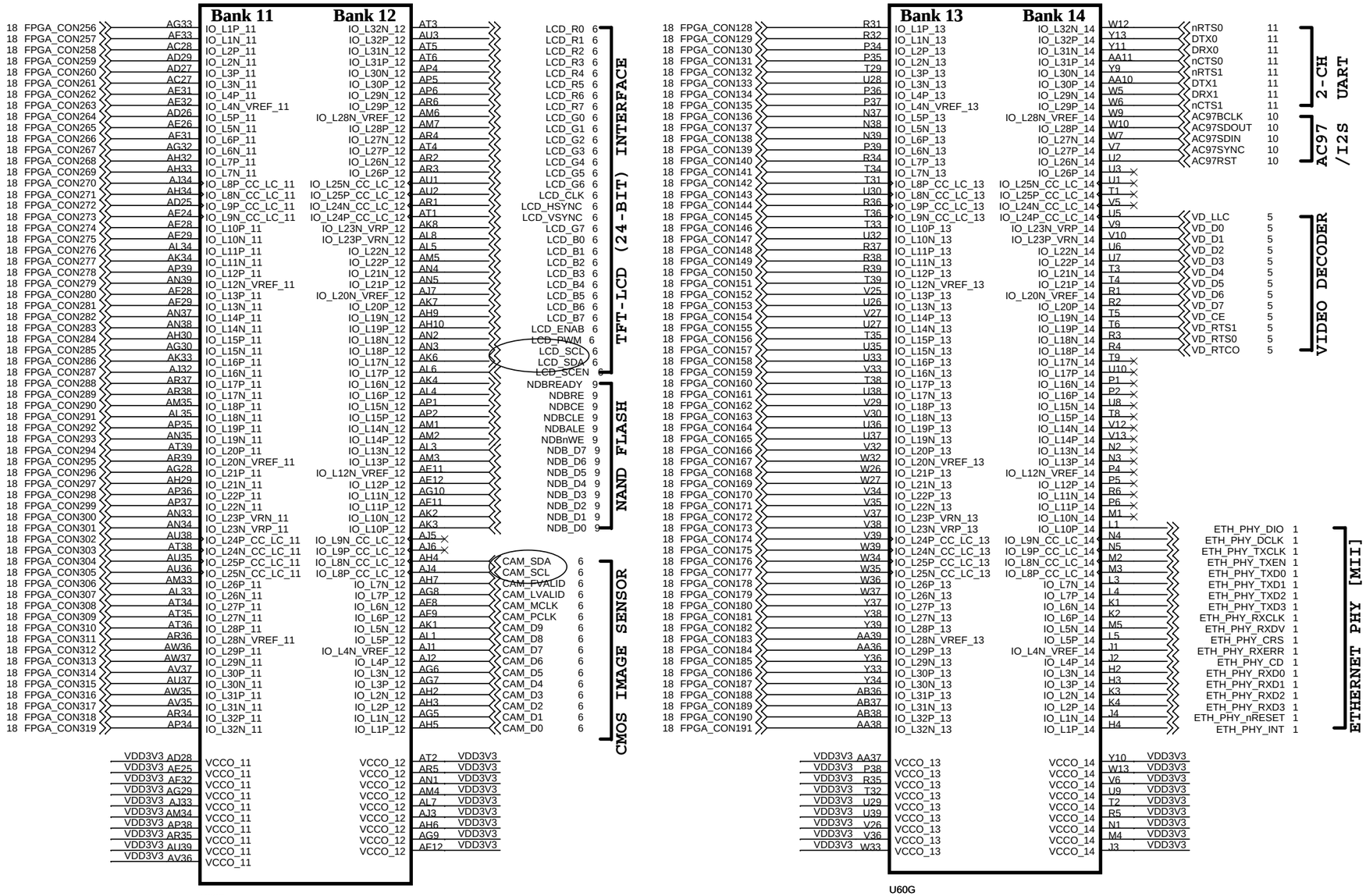

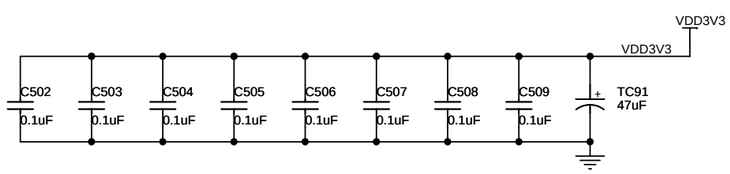

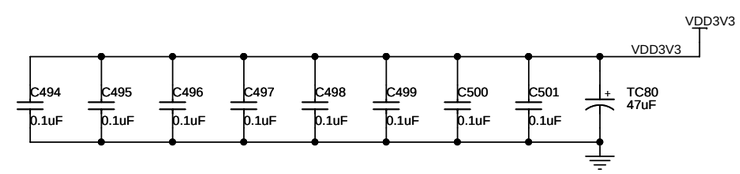

SANGHWA FPGA PLATFORM

Title: FPGA1 BANK 11/12/13/14

Size	Document Number	Rev
A3	<Doc>	1.0

Date: Wednesday, August 02, 2006 Sheet 24 of 26

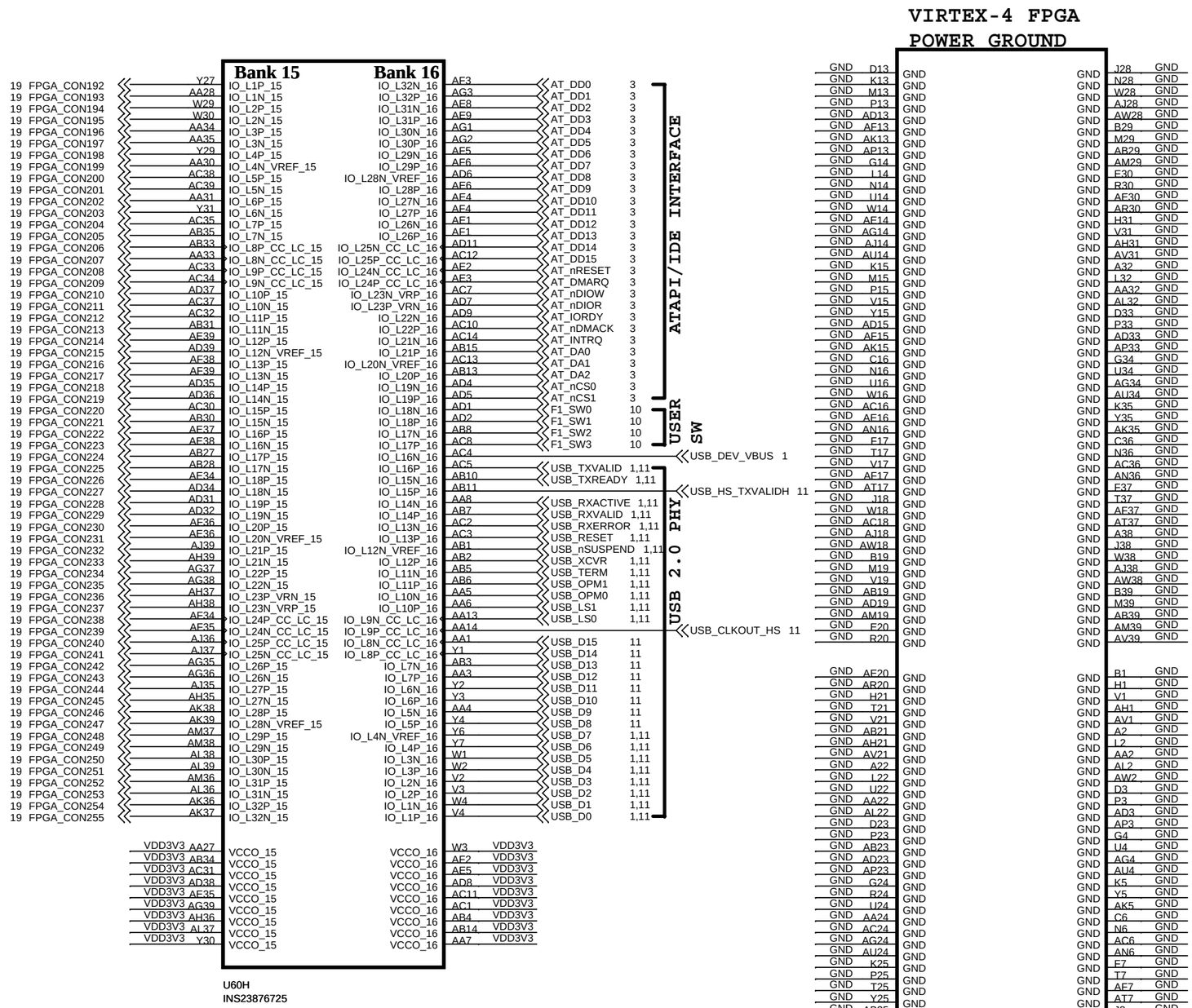

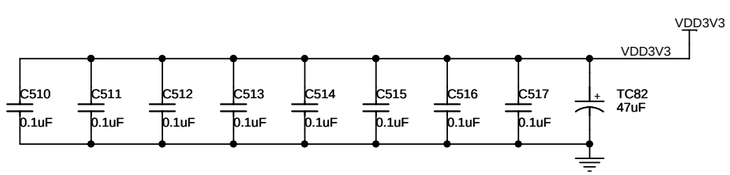

Title	SANGHWA FPGA PLATFORM FPGA1 BANK 15/16/GND
Size A3	Document Number <Doc>
Rev	1.0
Date:	Wednesday, August 02, 2006
Sheet	25 of 26

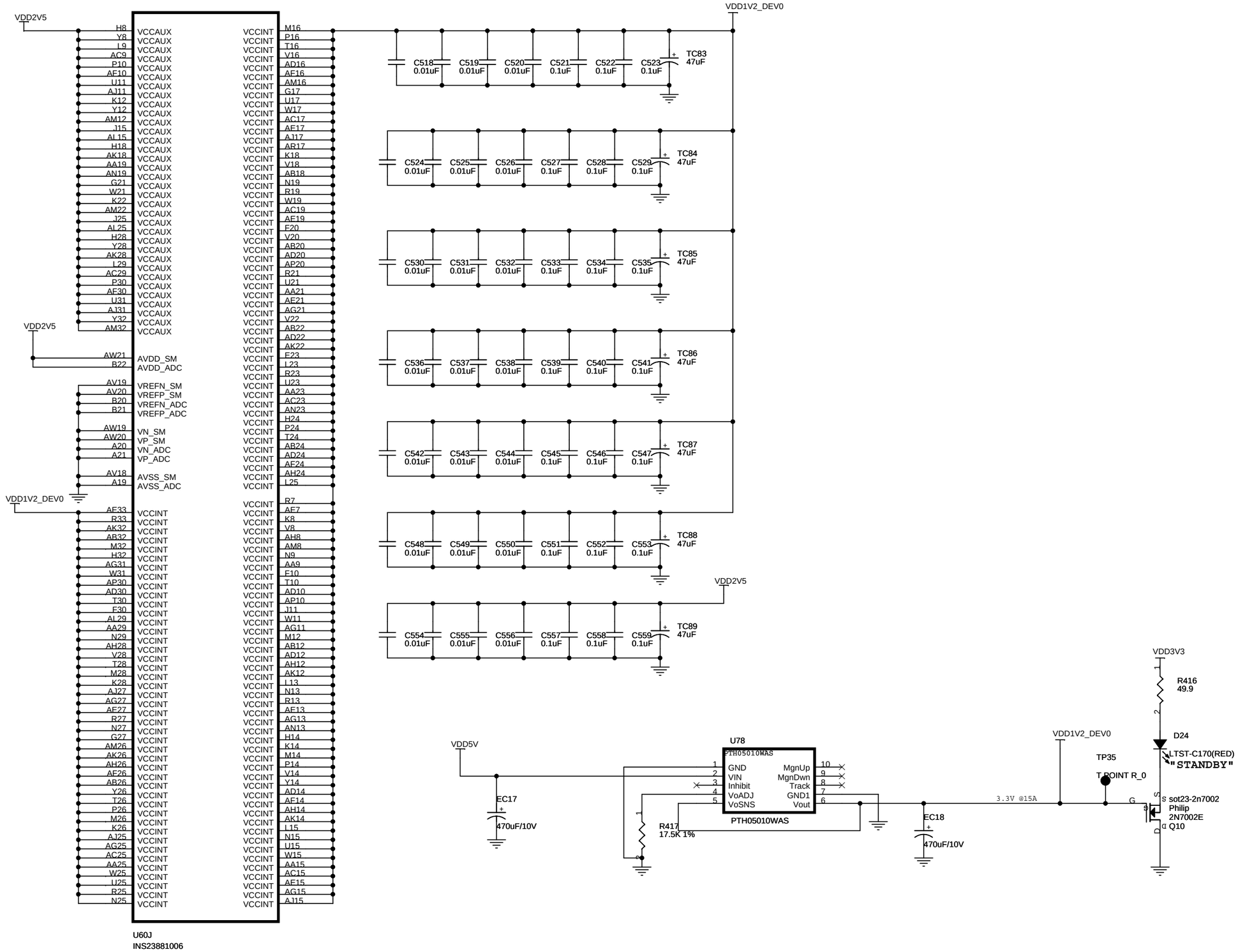

SANGHWA FPGA PLATFORM

Title **FPGA1 POWER VCCO**

Size	Document Number	Rev
A3	<Doc>	1.0

Date: Wednesday, August 02, 2006 Sheet 26 of 26