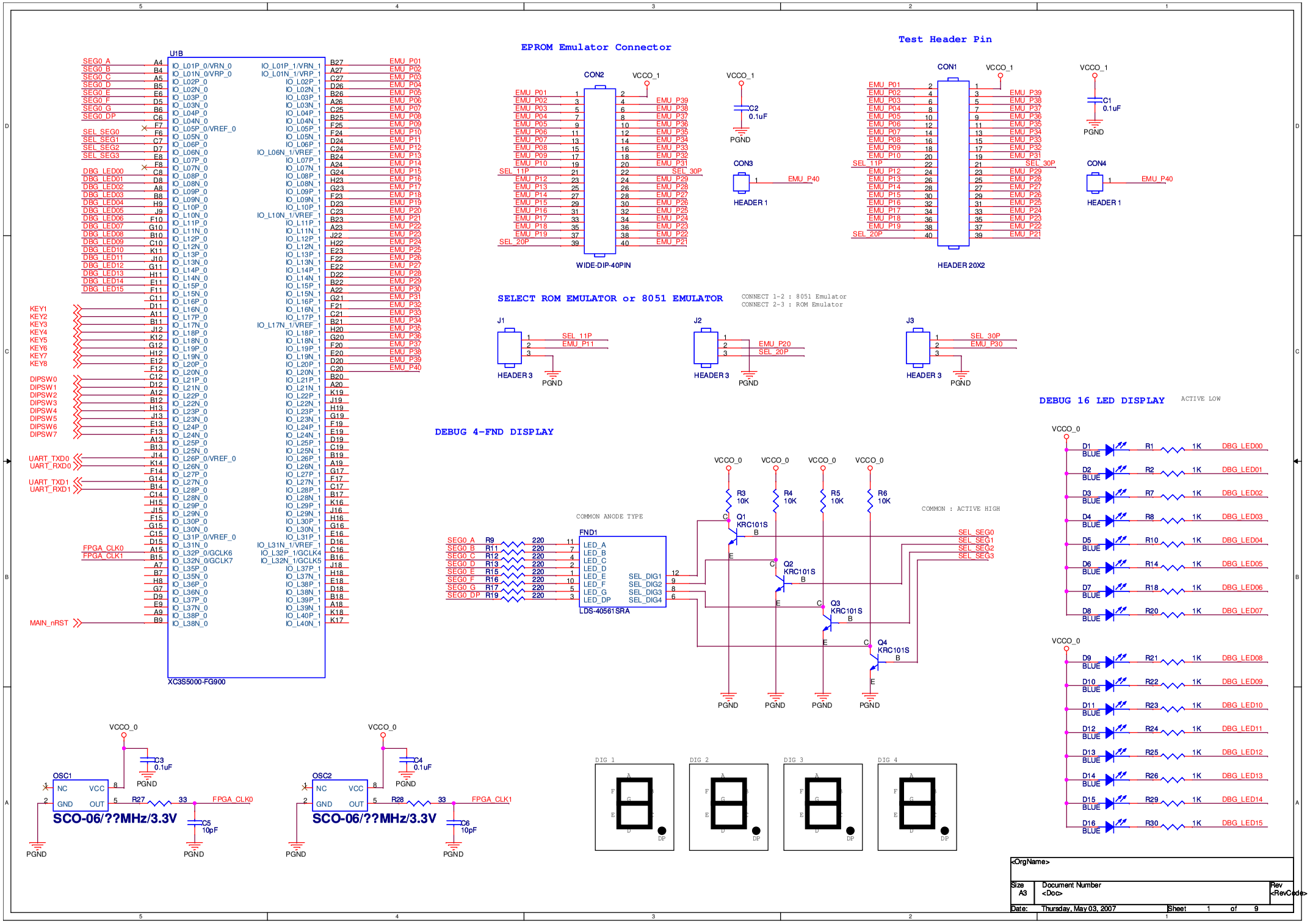
EPROM Emulator Connector
Test Header Pin
SELECT ROM EMULATOR or 8051 EMULATOR
CONNECT 1-2 : 8051 Emulator
CONNECT 2-3 : ROM Emulator
DEBUG 4-FND DISPLAY
DEBUG 16 LED DISPLAY
ACTIVE LOW
COMMON ANODE TYPE
COMMON : ACTIVE HIGH
U1B
XC3S5000-FG900
CON2
WIDE-DIP-40PIN
CON1
HEADER 20X2
CON3
CON4
HEADER 1
J1
J2
J3
HEADER 3
FND1
LDS-40561SRA
Q1 KRC101S
Q2 KRC101S
Q3 KRC101S
Q4 KRC101S
OSC1
OSC2
SCO-06/??MHz/3.3V
VCCO_0
VCCO_1
PGND
DIG 1
DIG 2
DIG 3
DIG 4
<OrgName>
Size A3
Document Number <Doc>
Rev <RevCode>
Date: Thursday, May 03, 2007
Sheet 1 of 9

Debugging Key

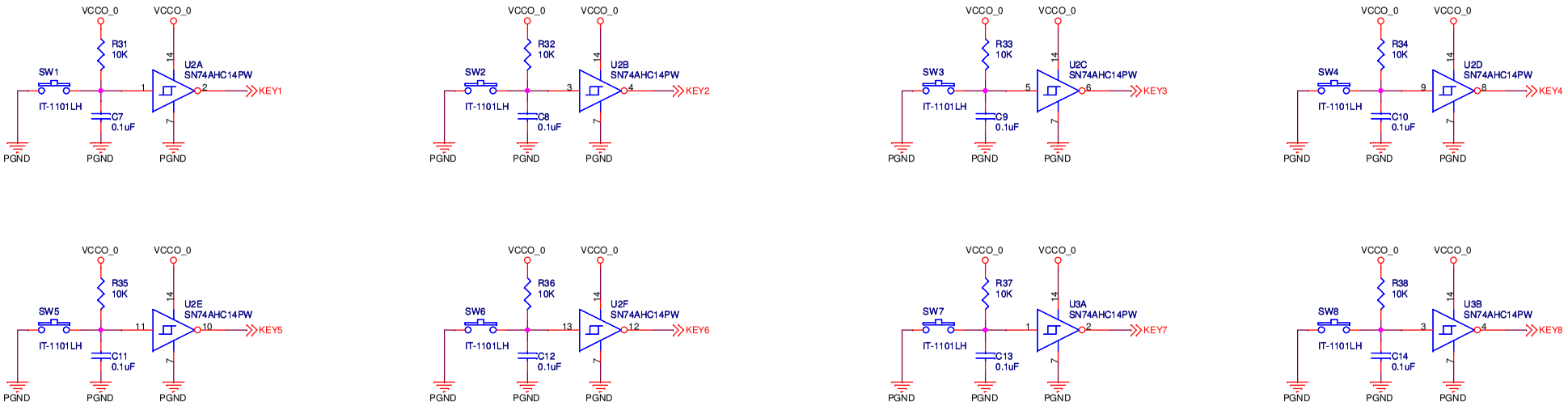

Debugging DIP SW

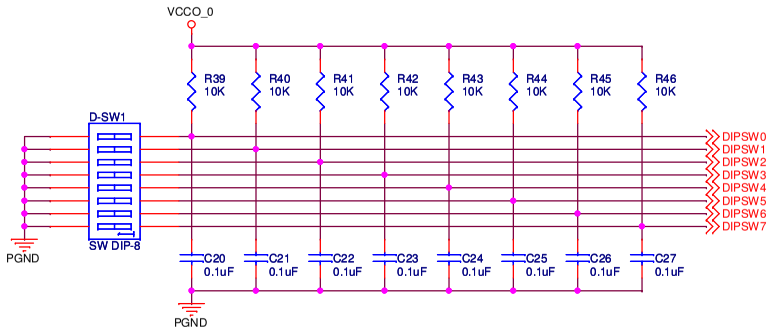

UART CH0 & CH1

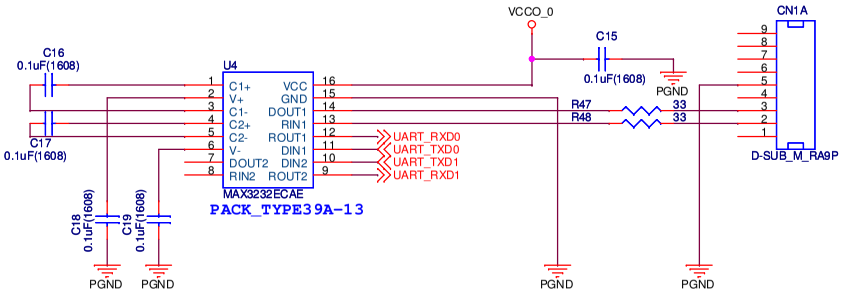

<OrgName>		
Size A3	Document Number <Doc>	Rev <RevCode>
Date: Thursday, May 03, 2007	Sheet 2 of 9	

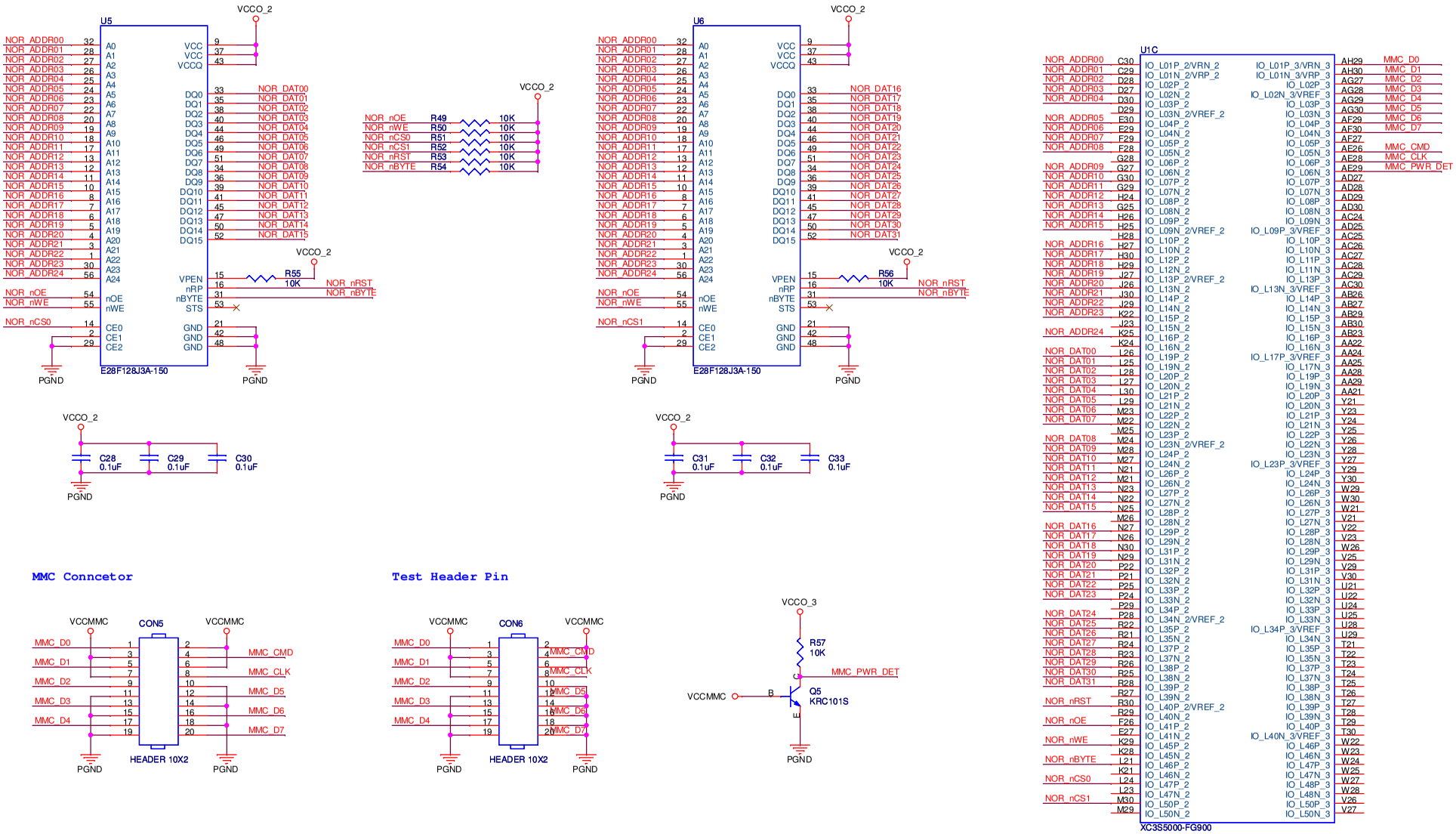

<OrgName>	
Size A3	Document Number <Doc>
Rev	<RevCode>
Date: Thursday, May 03, 2007	Sheet 3 of 9

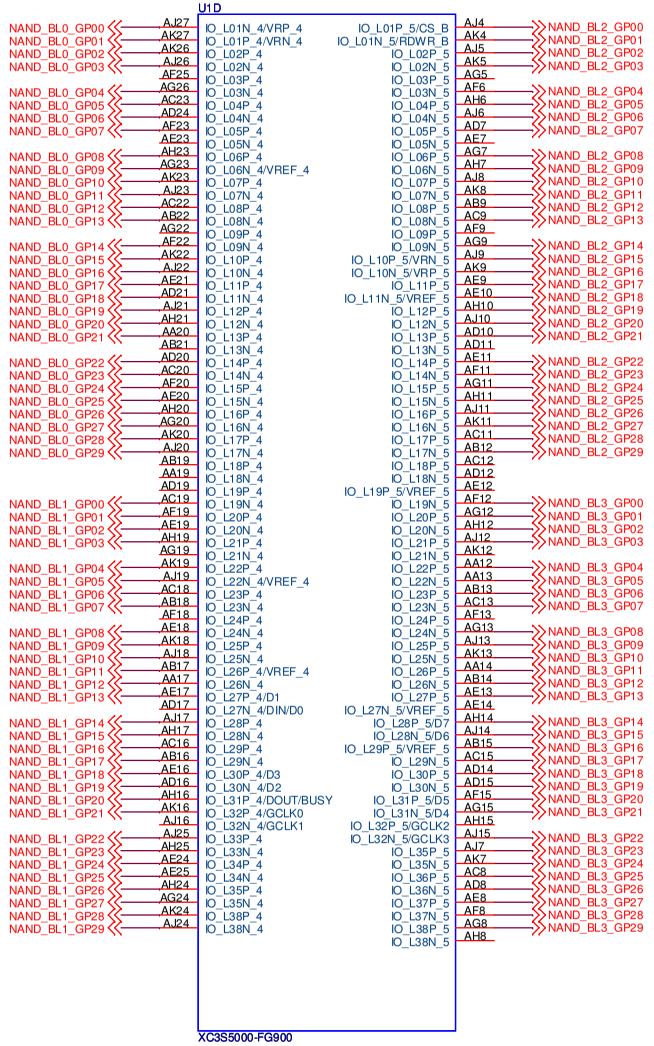

Nand Flash Board Connector

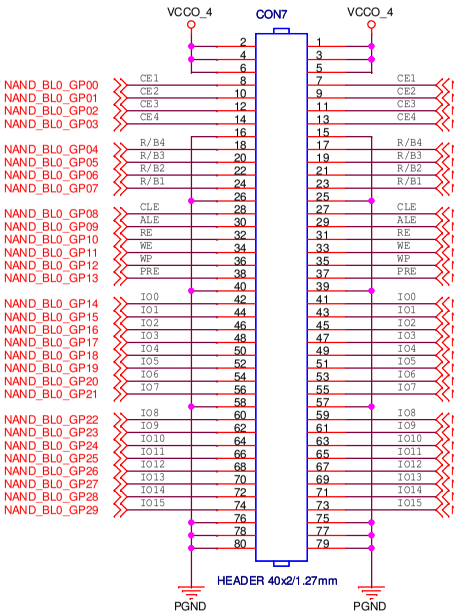

Test Header Pin

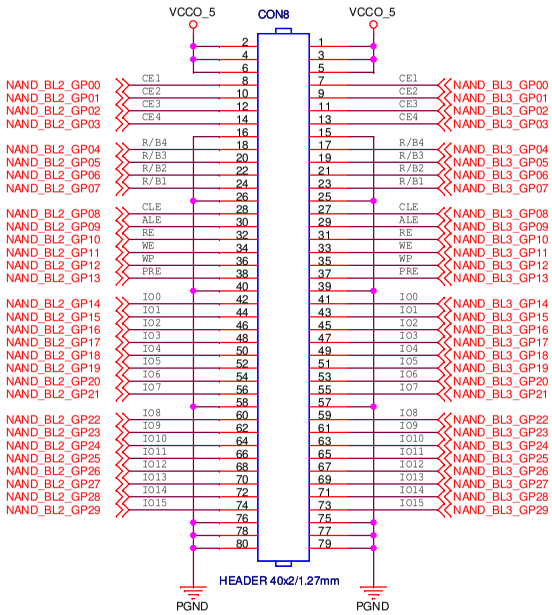

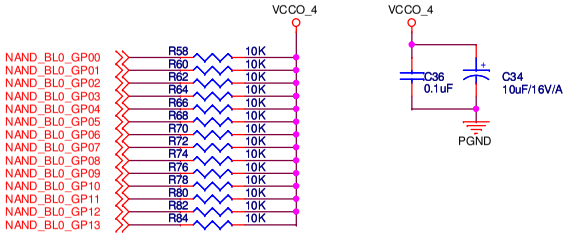

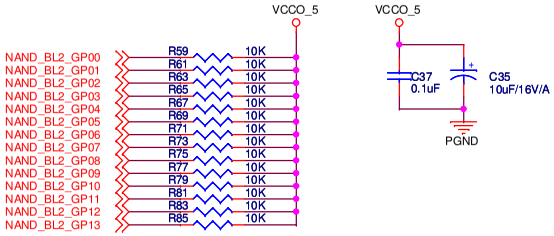

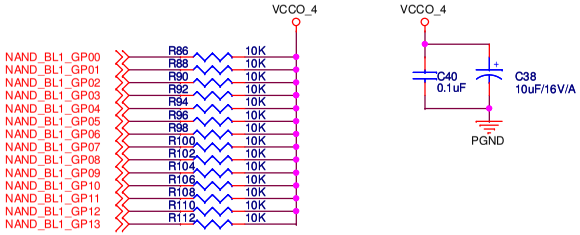

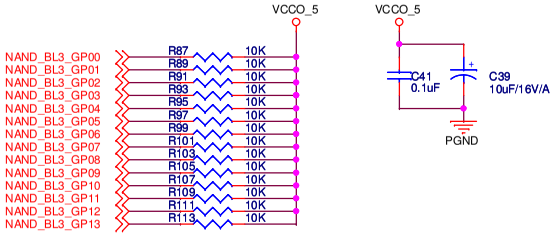

HY27UH08AG5M		K9W8G08U1M		K9NBG08U5M		K9MBG8U5M		
NC	NC	NC	NC	NC	NC	NC	NC	VSS
NC	NC	NC	NC	NC	NC	NC	NC	IO15
NC	NC	NC	NC	NC	NC	NC	NC	IO7
NC	NC	NC	NC	R/B4	NC	R/B4	NC	IO14
NC	IO7	NC	IO7	R/B3	IO7	R/B3	IO7	IO6
R/B2	IO6	R/B2	IO6	R/B2	IO6	R/B2	IO6	IO13
R/B1	IO5	R/B1	IO5	R/B1	IO5	R/B1	IO5	IO5
RE	IO4	RE	IO4	RE	IO4	RE	IO4	IO12
CE1	NC	CE1	NC	CE1	NC	CE1	NC	IO4
CE2	NC	CE2	NC	CE2	NC	CE2	NC	NC
NC	NC	NC	PRE	NC	NC	NC	NC	PRE
VCC	VCC	VCC	VCC	VCC	VCC	VCC	VCC	VCC
VSS	VSS	VSS	VSS	VSS	VSS	VSS	VSS	NC
NC	NC	NC	NC	CE3	NC	CE3	NC	NC
NC	NC	NC	NC	CE4	NC	CE4	NC	NC
CLE	NC	CLE	NC	CLE	NC	CLE	NC	IO11
ALE	IO3	ALE	IO3	ALE	IO3	ALE	IO3	IO3
WE	IO2	WE	IO2	WE	IO2	WE	IO2	IO10
WP	IO1	WP	IO1	WP	IO1	WP	IO1	IO2
NC	IO0	NC	IO0	NC	IO0	NC	IO0	IO9
NC	NC	NC	NC	NC	NC	NC	NC	IO1
NC	NC	NC	NC	NC	NC	NC	NC	IO8
NC	NC	NC	NC	NC	NC	NC	NC	IO0
NC	NC	NC	NC	NC	NC	NC	NC	VSS

<OrgName>			
Size A3	Document Number <Doc>		Rev <RevCode>
Date: Thursday, May 03, 2007	Sheet 4 of 9		

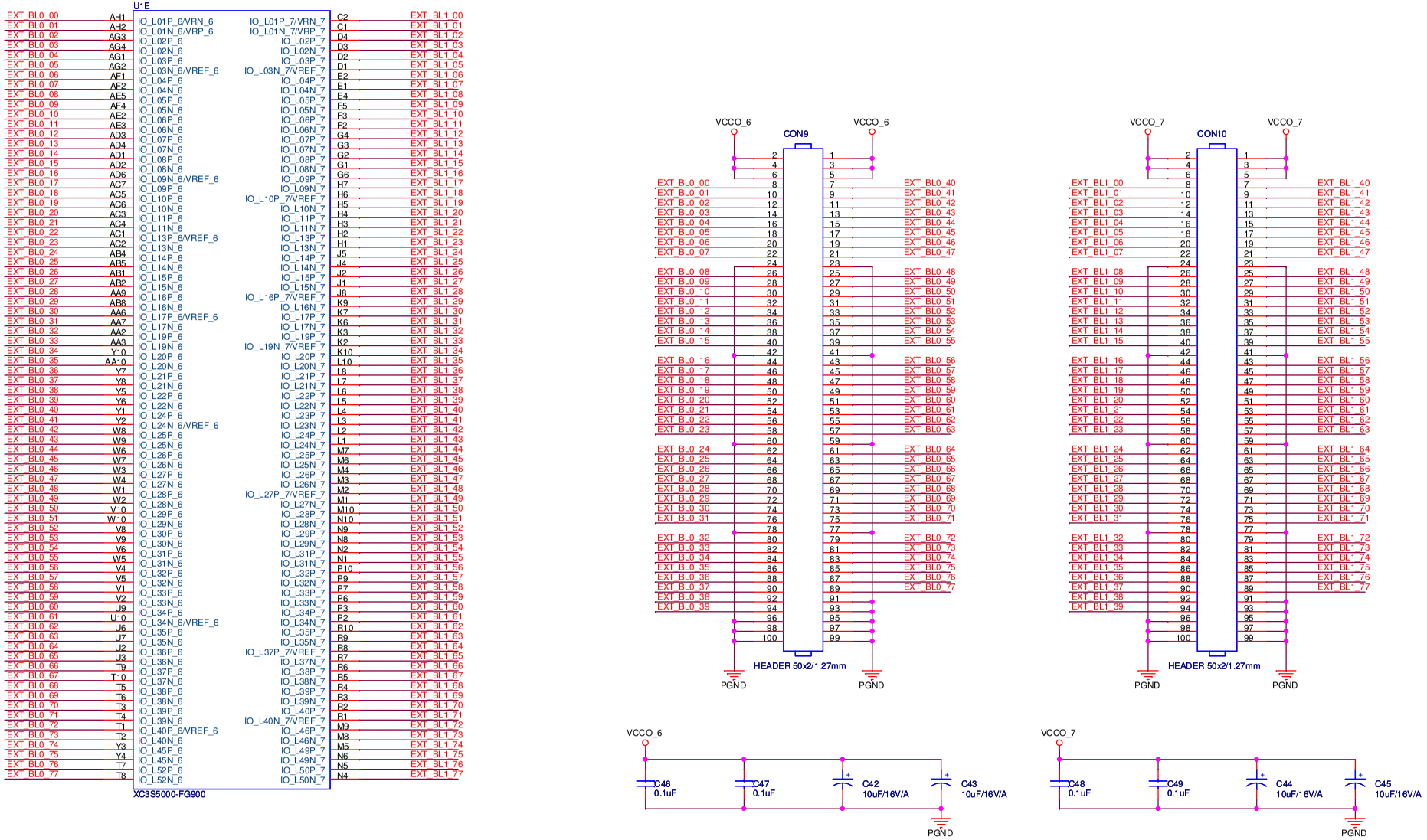

<OrgName>			
Size A3	Document Number <Doc>		Rev <RevCode>
Date: Thursday, May 03, 2007	Sheet 5 of 9		

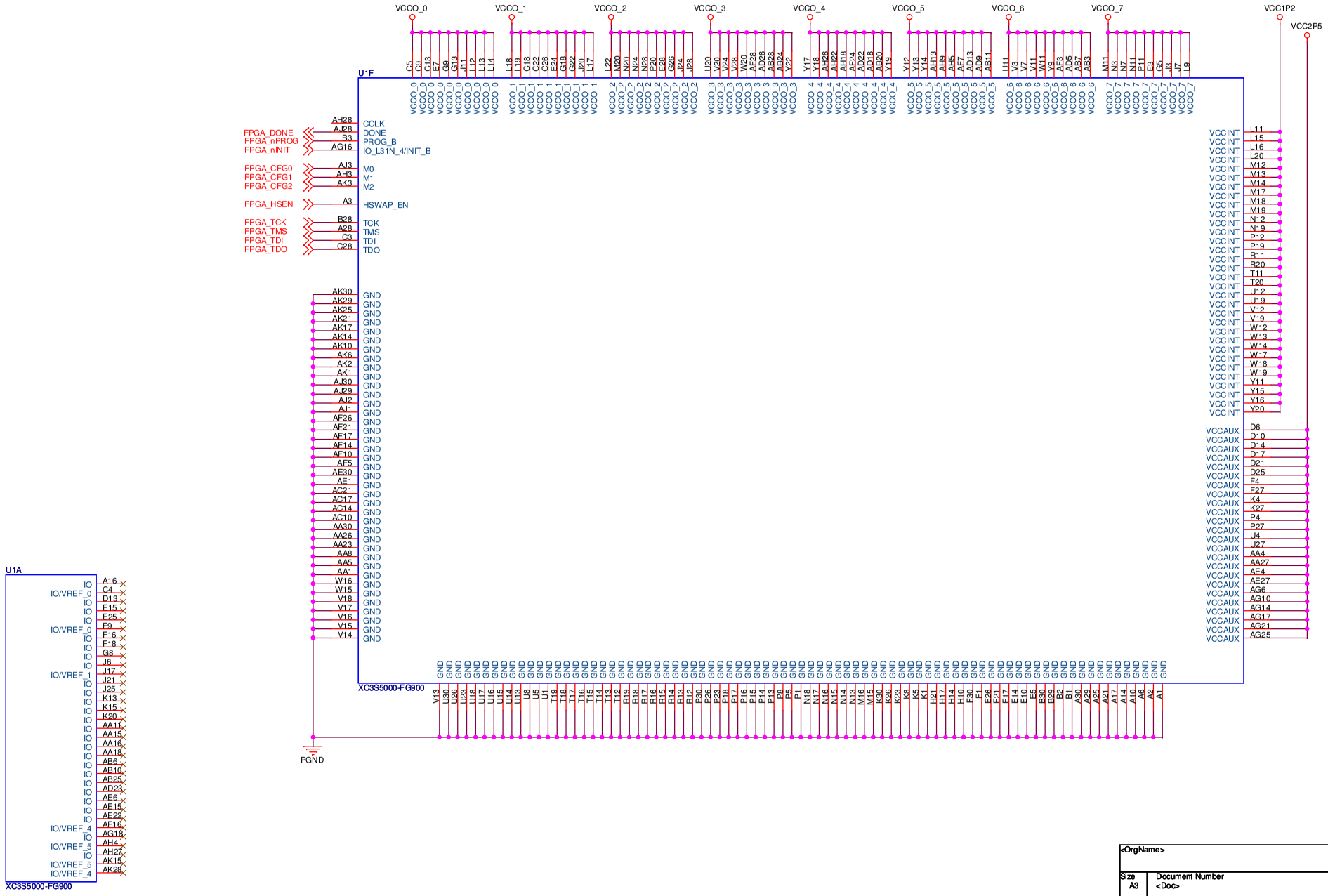
VCCO_0
VCCO_1
VCCO_2
VCCO_3
VCCO_4
VCCO_5
VCCO_6
VCCO_7
VCC1P2
VCC2P5
U1F
FPGA_DONE
FPGA_nPROG
FPGA_nINIT
FPGA_CFG0
FPGA_CFG1
FPGA_CFG2
FPGA_HSEN
FPGA_TCK
FPGA_TMS
FPGA_TDI
FPGA_TDO
CCLK
DONE
PROG_B
IO_L31N_4/INIT_B
M0
M1
M2
HSWAP_EN
TCK
TMS
TDI
TDO
GND
VCCINT
VCCAUX
XC3S5000-FG900
PGND
U1A
IO
IO/VREF_0
IO/VREF_1
IO/VREF_4
IO/VREF_5
XC3S5000-FG900

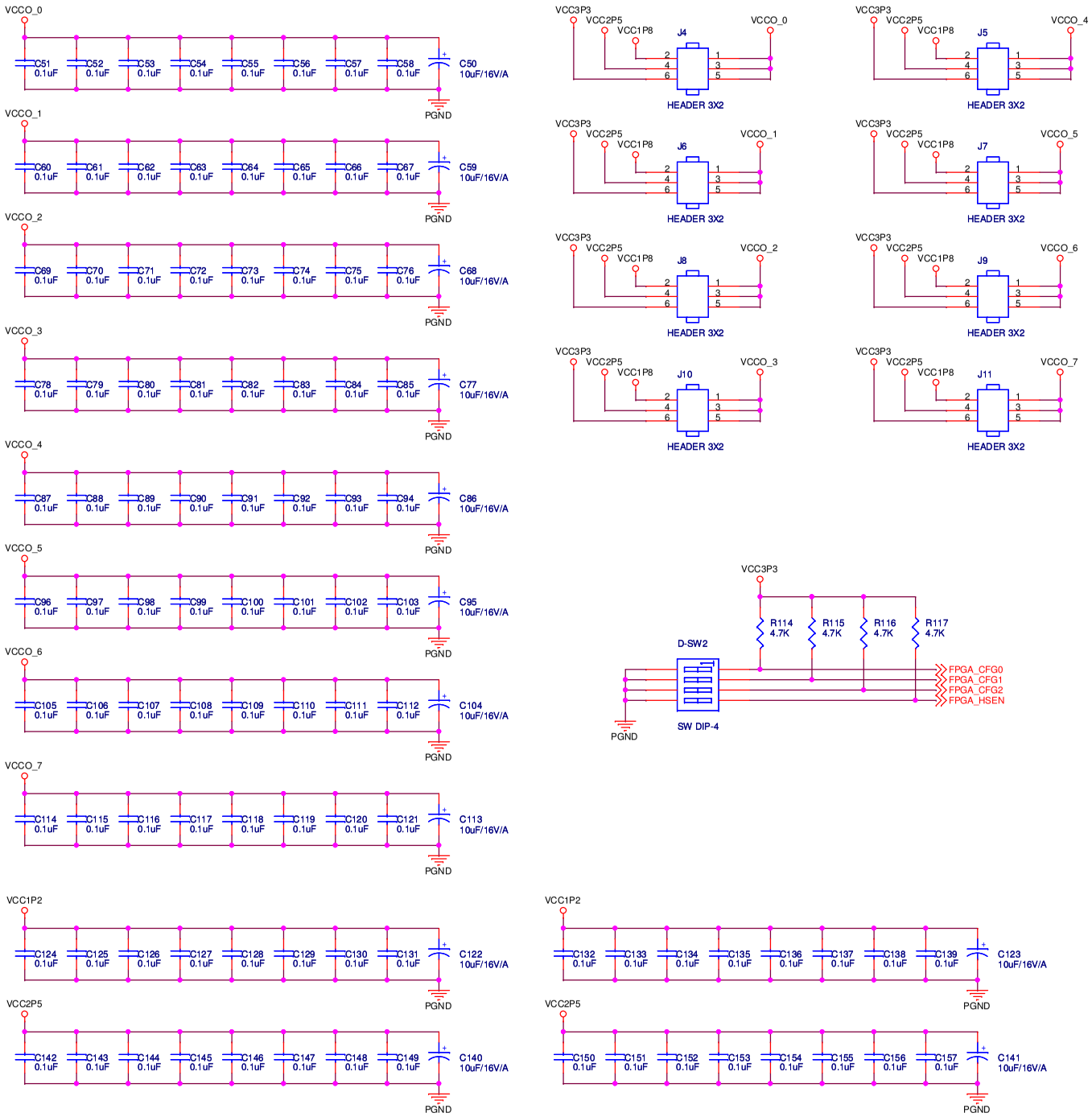

<OrgName>		
Size A3	Document Number <Doc>	Rev <RevCode>
Date: Thursday, May 03, 2007	Sheet 7 of 9	

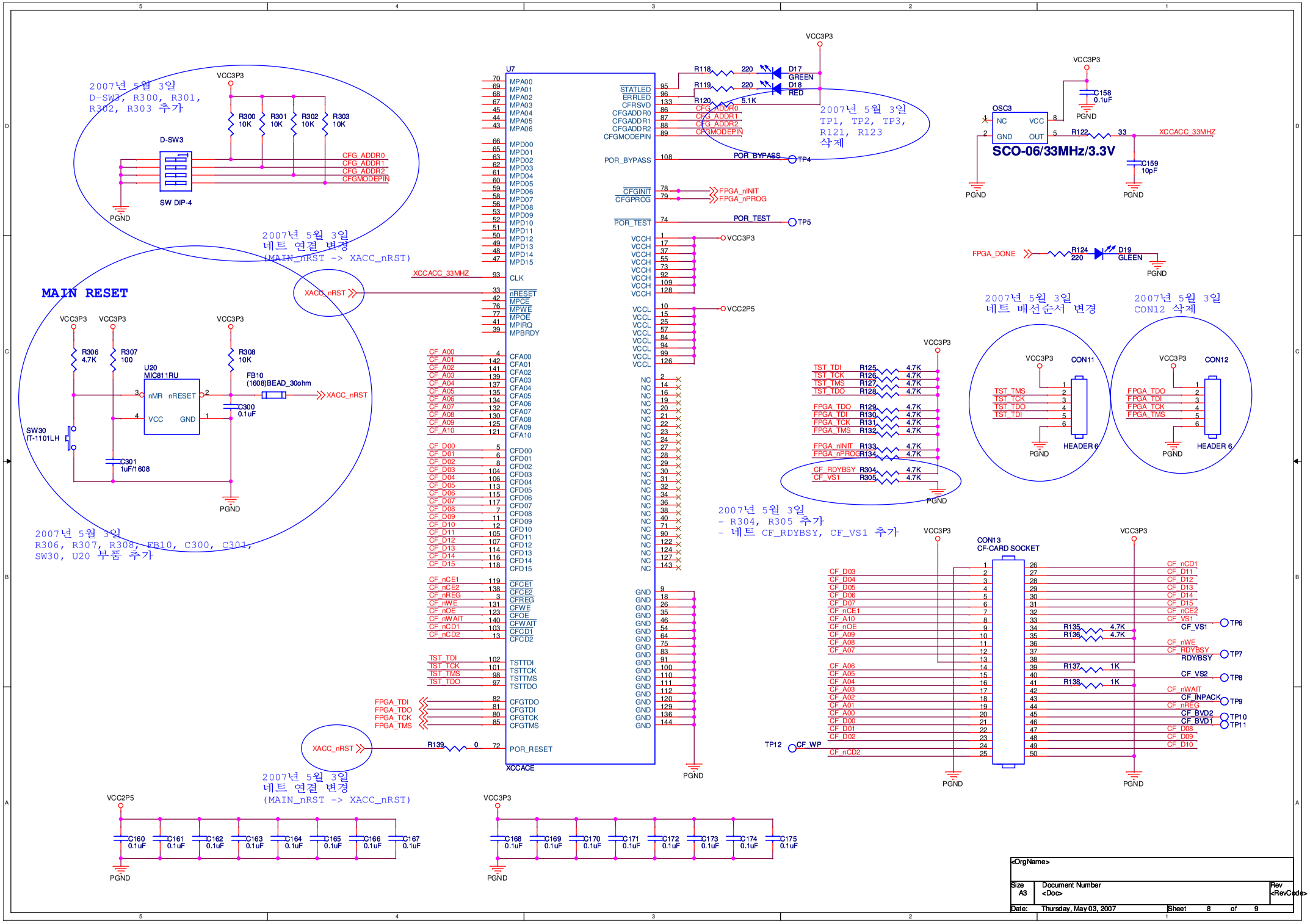
2007년 5월 3일
D-SW3, R300, R301,
R302, R303 추가
D-SW3
SW DIP-4
R300 10K
R301 10K
R302 10K
R303 10K
CFG_ADDR0
CFG_ADDR1
CFG_ADDR2
CFGMODEPIN
VCC3P3
PGND
2007년 5월 3일
네트 연결 변경
(MAIN_nRST -> XACC_nRST)
MAIN RESET
XACC_nRST
XCCACC_33MHZ
R306 4.7K
R307 100
R308 10K
U20
MIC811RU
nMR
nRESET
VCC
GND
FB10
(1608)BEAD_30ohm
C300 0.1uF
C301 1uF/1608
SW30
IT-1101LH
2007년 5월 3일
R306, R307, R308, FB10, C300, C301,
SW30, U20 부품 추가
U7
XCCACE
STATLED
ERRLED
CFRSVD
CFGADDR0
CFGADDR1
CFGADDR2
CFGMODEPIN
POR_BYPASS
CFGINIT
CFGPROG
POR_TEST
VCCH
VCCL
NC
GND
CLK
nRESET
MPCE
MPWE
MPOE
MPIRQ
MPBRDY
CFA00
CFA01
CFA02
CFA03
CFA04
CFA05
CFA06
CFA07
CFA08
CFA09
CFA10
CFD00
CFD01
CFD02
CFD03
CFD04
CFD05
CFD06
CFD07
CFD08
CFD09
CFD10
CFD11
CFD12
CFD13
CFD14
CFD15
CFCE1
CFCE2
CFREG
CFWE
CFOE
CFWAIT
CFCD1
CFCD2
TSTTDI
TSTTCK
TSTTMS
TSTTDO
CFGTDO
CFGTDI
CFGTCK
CFGTMS
POR_RESET
FPGA_TDI
FPGA_TDO
FPGA_TCK
FPGA_TMS
R139 0
2007년 5월 3일
네트 연결 변경
(MAIN_nRST -> XACC_nRST)
R118 220
R119 220
R120 5.1K
D17 GREEN
D18 RED
2007년 5월 3일
TP1, TP2, TP3,
R121, R123
삭제
TP4
TP5
VCC2P5
FPGA_nINIT
FPGA_nPROG
OSC3
NC
VCC
GND
OUT
SCO-06/33MHz/3.3V
C158 0.1uF
R122 33
C159 10pF
FPGA_DONE
R124 220
D19 GLEEN
2007년 5월 3일
네트 배선순서 변경
2007년 5월 3일
CON12 삭제
CON11
HEADER 6
CON12
HEADER 6
TST_TDI R125 4.7K
TST_TCK R126 4.7K
TST_TMS R127 4.7K
TST_TDO R128 4.7K
FPGA_TDO R129 4.7K
FPGA_TDI R130 4.7K
FPGA_TCK R131 4.7K
FPGA_TMS R132 4.7K
FPGA_nINIT R133 4.7K
FPGA_nPROG R134 4.7K
CF_RDYBSY R304 4.7K
CF_VS1 R305 4.7K
2007년 5월 3일
- R304, R305 추가
- 네트 CF_RDYBSY, CF_VS1 추가
CON13
CF-CARD SOCKET
R135 4.7K
R136 4.7K
R137 1K
R138 1K
TP6
TP7
TP8
TP9
TP10
TP11
TP12
CF_WP
C160 0.1uF
C161 0.1uF
C162 0.1uF
C163 0.1uF
C164 0.1uF
C165 0.1uF
C166 0.1uF
C167 0.1uF
C168 0.1uF
C169 0.1uF
C170 0.1uF
C171 0.1uF
C172 0.1uF
C173 0.1uF
C174 0.1uF
C175 0.1uF
<OrgName>
Size A3
Document Number <Doc>
Rev <RevCode>
Date: Thursday, May 03, 2007
Sheet 8 of 9

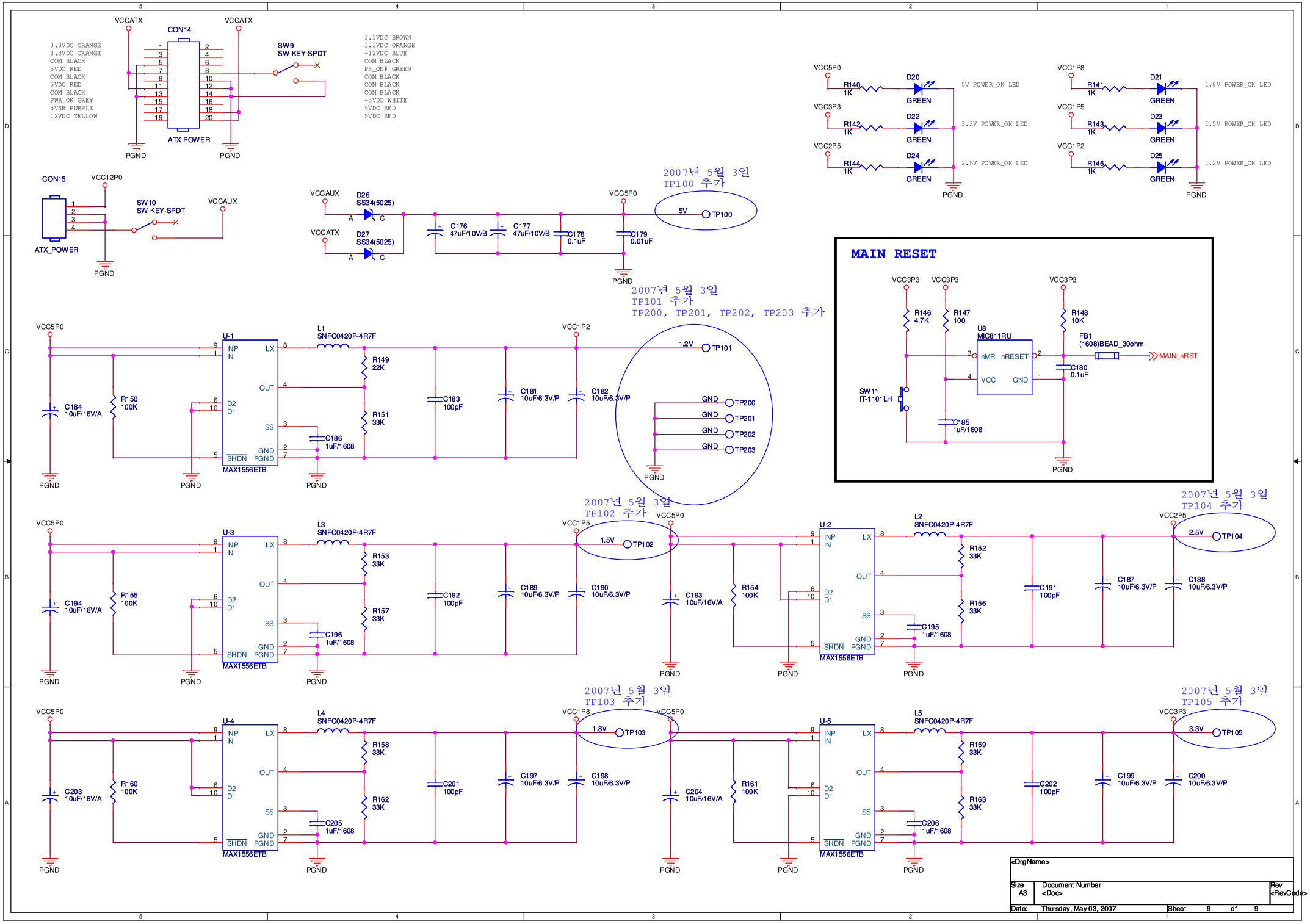
CON14
ATX POWER
SW9
SW KEY-SPDT
VCCATX
PGND
3.3VDC ORANGE
3.3VDC ORANGE
COM BLACK
5VDC RED
COM BLACK
5VDC RED
COM BLACK
PWR_OK GREY
5VSB PURPLE
12VDC YELLOW
3.3VDC BROWN
3.3VDC ORANGE
-12VDC BLUE
COM BLACK
PS_ON# GREEN
COM BLACK
COM BLACK
COM BLACK
-5VDC WHITE
5VDC RED
5VDC RED
VCC5P0
VCC3P3
VCC2P5
VCC1P8
VCC1P5
VCC1P2
R140 1K
R142 1K
R144 1K
R141 1K
R143 1K
R145 1K
D20 GREEN
D22 GREEN
D24 GREEN
D21 GREEN
D23 GREEN
D25 GREEN
5V POWER_OK LED
3.3V POWER_OK LED
2.5V POWER_OK LED
1.8V POWER_OK LED
1.5V POWER_OK LED
1.2V POWER_OK LED
CON15
ATX_POWER
VCC12P0
SW10
SW KEY-SPDT
VCCAUX
D26 SS34(5025)
D27 SS34(5025)
C176 47uF/10V/B
C177 47uF/10V/B
C178 0.1uF
C179 0.01uF
5V
TP100
2007년 5월 3일
TP100 추가
2007년 5월 3일
TP101 추가
TP200, TP201, TP202, TP203 추가
MAIN RESET
U8
MIC811RU
nMR
nRESET
VCC
GND
R146 4.7K
R147 100
R148 10K
FB1 (1608)BEAD_30ohm
MAIN_nRST
C180 0.1uF
SW11 IT-1101LH
C185 1uF/1608
U-1
U-2
U-3
U-4
U-5
INP
IN
LX
OUT
D2
D1
SS
GND
SHDN
PGND
MAX1556ETB
L1 SNFC0420P-4R7F
L2 SNFC0420P-4R7F
L3 SNFC0420P-4R7F
L4 SNFC0420P-4R7F
L5 SNFC0420P-4R7F
C184 10uF/16V/A
R150 100K
R149 22K
R151 33K
C186 1uF/1608
C183 100pF
C181 10uF/6.3V/P
C182 10uF/6.3V/P
1.2V
TP101
GND
TP200
TP201
TP202
TP203
2007년 5월 3일
TP102 추가
1.5V
TP102
C194 10uF/16V/A
R155 100K
R153 33K
R157 33K
C196 1uF/1608
C192 100pF
C189 10uF/6.3V/P
C190 10uF/6.3V/P
C193 10uF/16V/A
R154 100K
R152 33K
R156 33K
C195 1uF/1608
C191 100pF
C187 10uF/6.3V/P
C188 10uF/6.3V/P
2.5V
TP104
2007년 5월 3일
TP104 추가
2007년 5월 3일
TP103 추가
1.8V
TP103
C203 10uF/16V/A
R160 100K
R158 33K
R162 33K
C205 1uF/1608
C201 100pF
C197 10uF/6.3V/P
C198 10uF/6.3V/P
C204 10uF/16V/A
R161 100K
R159 33K
R163 33K
C206 1uF/1608
C202 100pF
C199 10uF/6.3V/P
C200 10uF/6.3V/P
3.3V
TP105
2007년 5월 3일
TP105 추가
<OrgName>
Size A3
Document Number <Doc>
Rev <RevCode>
Date: Thursday, May 03, 2007
Sheet 9 of 9