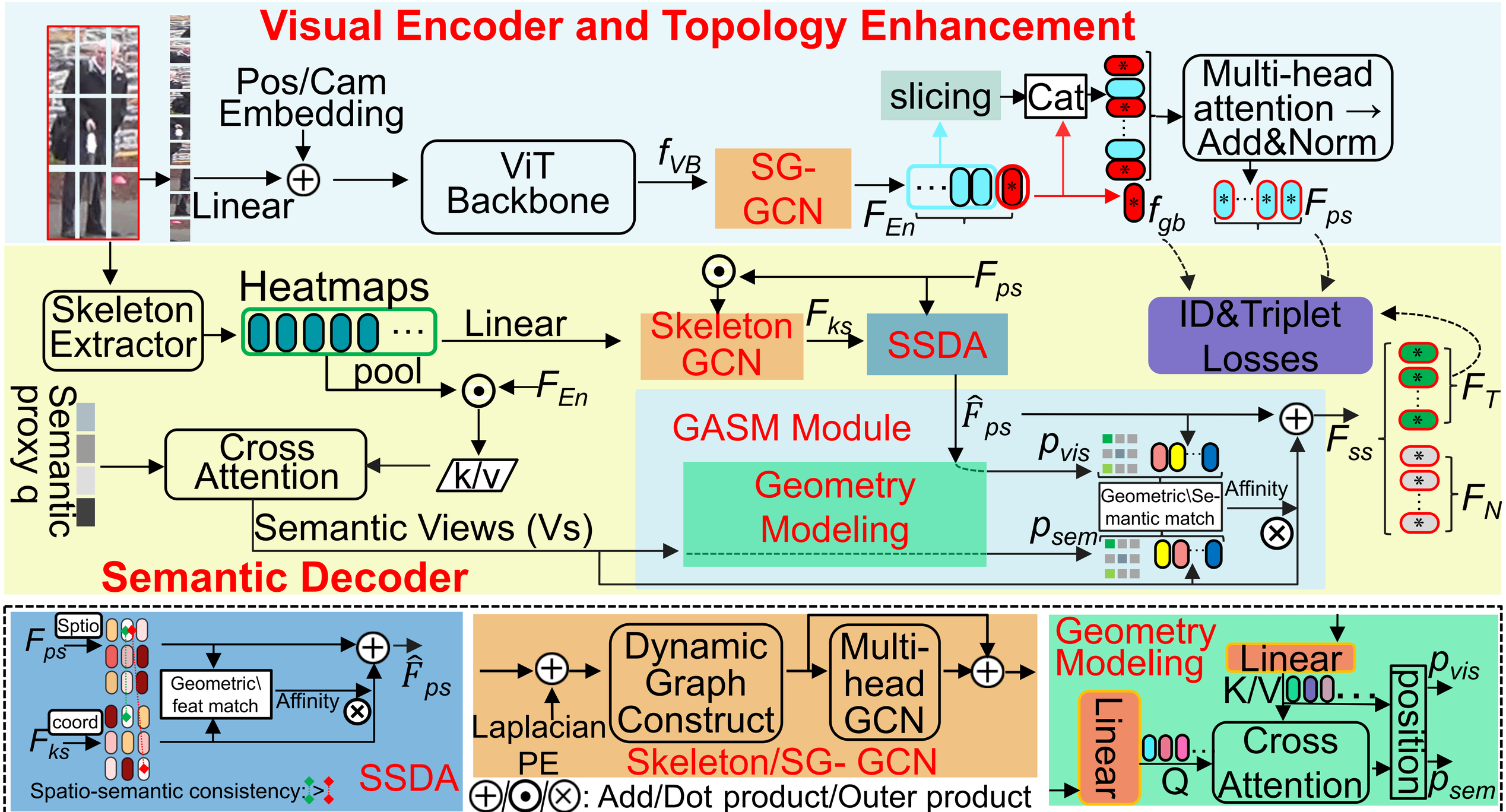
Visual Encoder and Topology Enhancement
Pos/Cam Embedding
Linear
ViT Backbone
f_{VB}
SG-GCN
F_{En}
slicing
Cat
f_{gb}
Multi-head attention → Add&Norm
F_{ps}
Skeleton Extractor
Heatmaps
Linear
pool
F_{En}
Skeleton GCN
F_{ks}
F_{ps}
SSDA
ID&Triplet Losses
F_T
F_N
Semantic proxy q
Cross Attention
k/v
Semantic Views (Vs)
GASM Module
$\hat{F}_{ps}$
p_{vis}
p_{sem}
Geometric\Semantic match
Affinity
F_{ss}
Geometry Modeling
Semantic Decoder
Sptio
coord
F_{ps}
F_{ks}
Geometric\ feat match
Affinity
$\hat{F}_{ps}$
Spatio-semantic consistency
SSDA
Laplacian PE
Dynamic Graph Construct
Multi-head GCN
Skeleton/SG- GCN
⊕/⊙/⊗: Add/Dot product/Outer product
Geometry Modeling
Linear
K/V
Linear
Q
Cross Attention
position
p_{vis}
p_{sem}