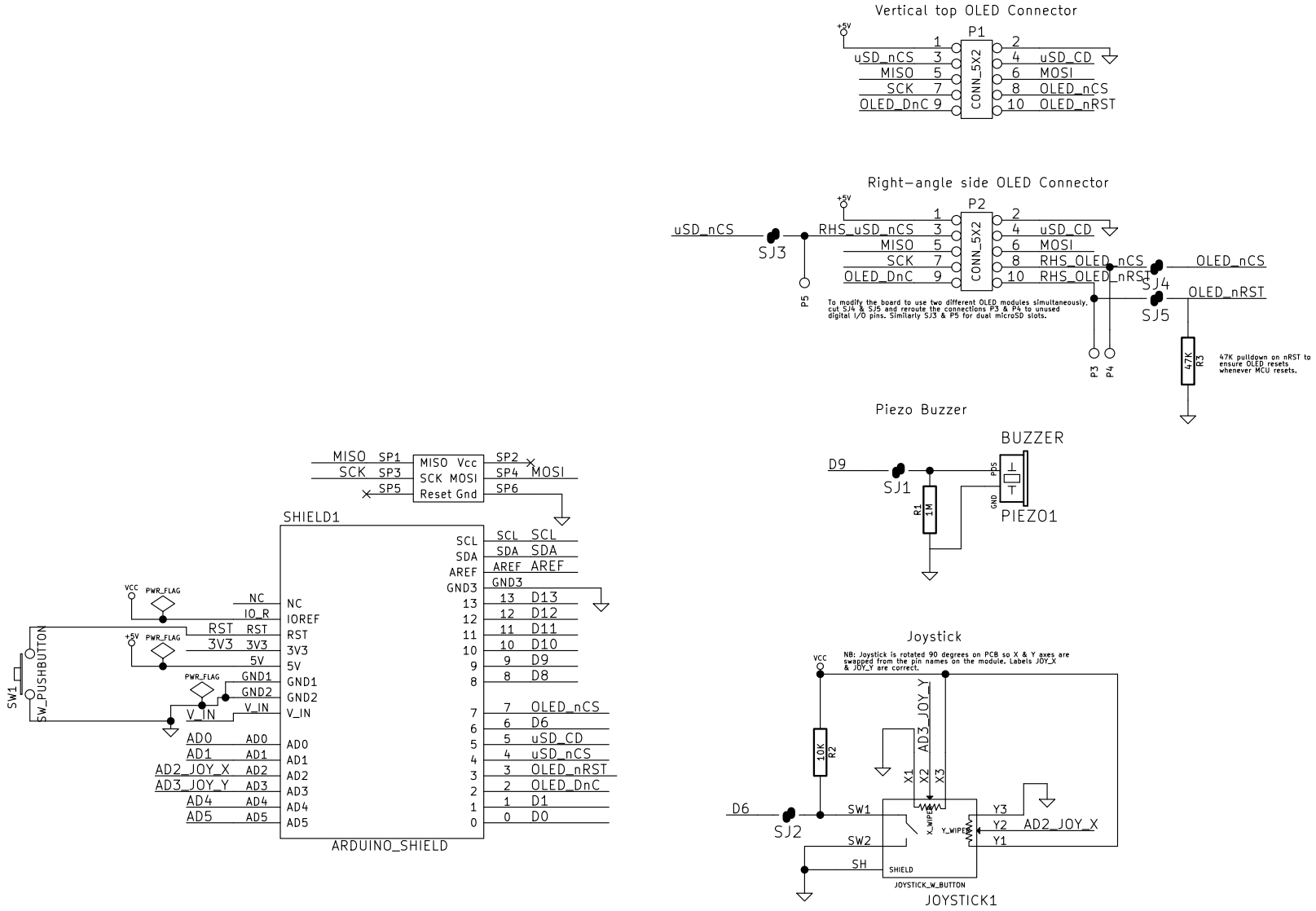

SKU: OLEDSHIELD

Released under TAPR Open Hardware License www.tapr.org/ohl

(C)2013 Freetronics Pty Ltd

File:

Sheet: /home/gus/ft/oled/OLEDShield/OLEDShield.sch

Title: Freetronics OLEDShield http://www.freetronics.com/oledshield

Size: A4	Date: 24 Jul 2013	Rev: 1.1
KiCad E.D.A. eeschema (2013-mar-13)-testing		Id: 1/1