Jumpers J1, J2, and J3 change the input voltage to the internal low-battery comparator output.

Input voltage: 1.2 to 4.5V DC.
eg. single-cell Li-ion battery
or 1 or 2x alkaline (1.5V) or NiMH (1.2V) cells.

L1: Same inductor as EtherMega

USB data bus bias voltage = 2.0V for iPhone at 500mA charge current.
See http://www.ladyada.net/make/mintyboost/icharge.html

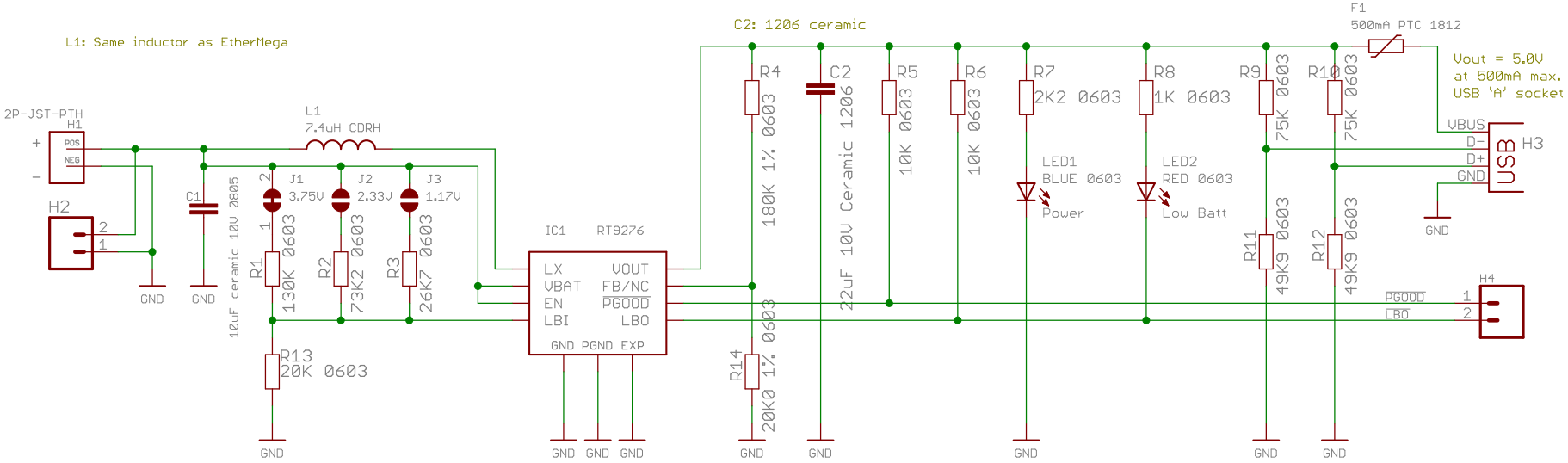

Freetronics Voltage-Boost USB Supply

SKU: USBBOOST	V1.1 (2013-05-06)	www.freetronics.com/usbboost

(C)2013 Freetronics Pty Ltd: www.freetronics.com
Licensed under the TAPR Open Hardware License: www.tapr.org/ohl