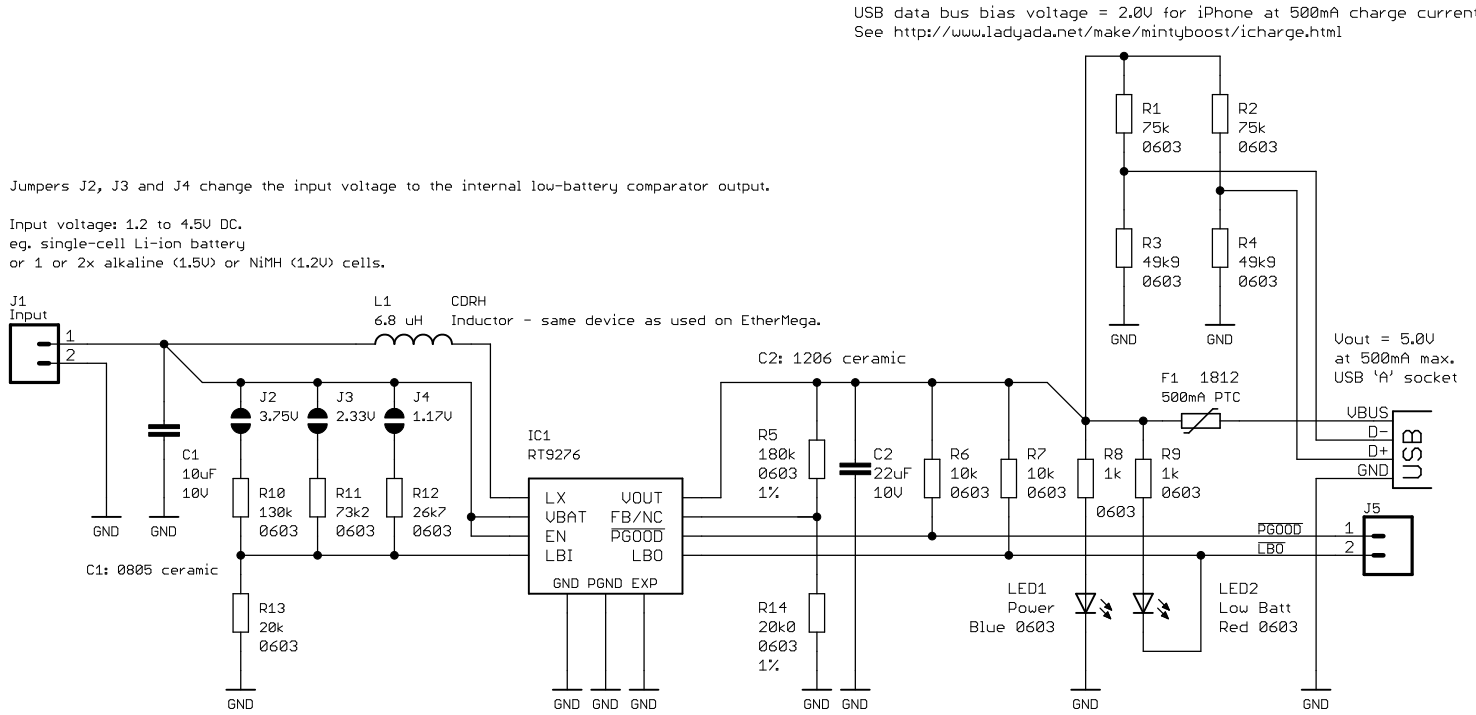

Freetronics Voltage-Boost USB Supply

SKU: USBBOOST	V0.5 (06-05-2012)	www.freetronics.com/usbboost

(C)2012 Freetronics Pty Ltd: www.freetronics.com
Licensed under the TAPR Open Hardware License: www.tapr.org/ohl