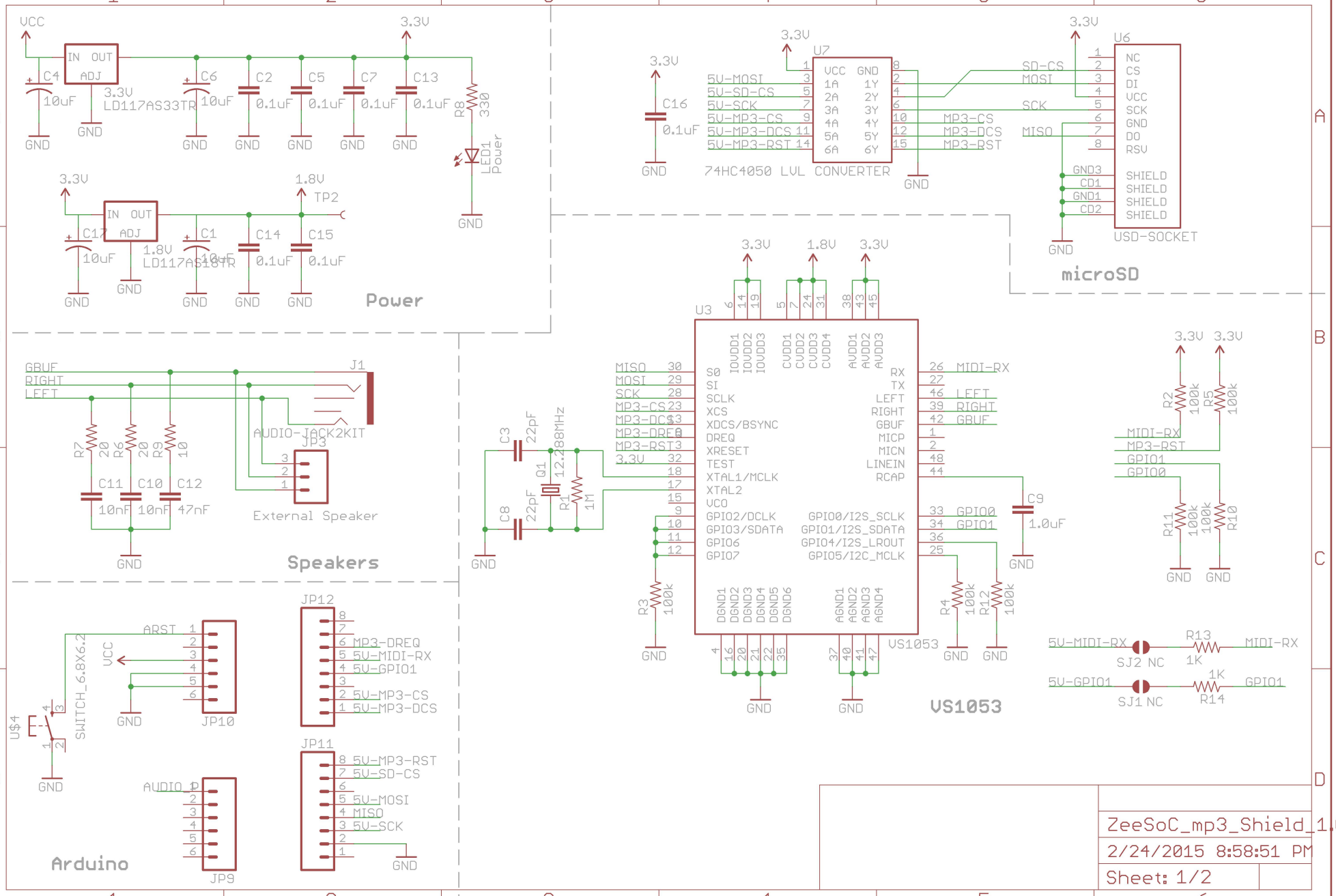
Power
LD117AS33TR
LD117AS18TR
LED1 Power
Speakers
AUDIO-JACK2KIT
External Speaker
Arduino
SWITCH_6.8X6.2
microSD
USD-SOCKET
74HC4050 LVL CONVERTER
VS1053
SJ2 NC
SJ1 NC
ZeeSoC_mp3_Shield_1.0
2/24/2015 8:58:51 PM
Sheet: 1/2

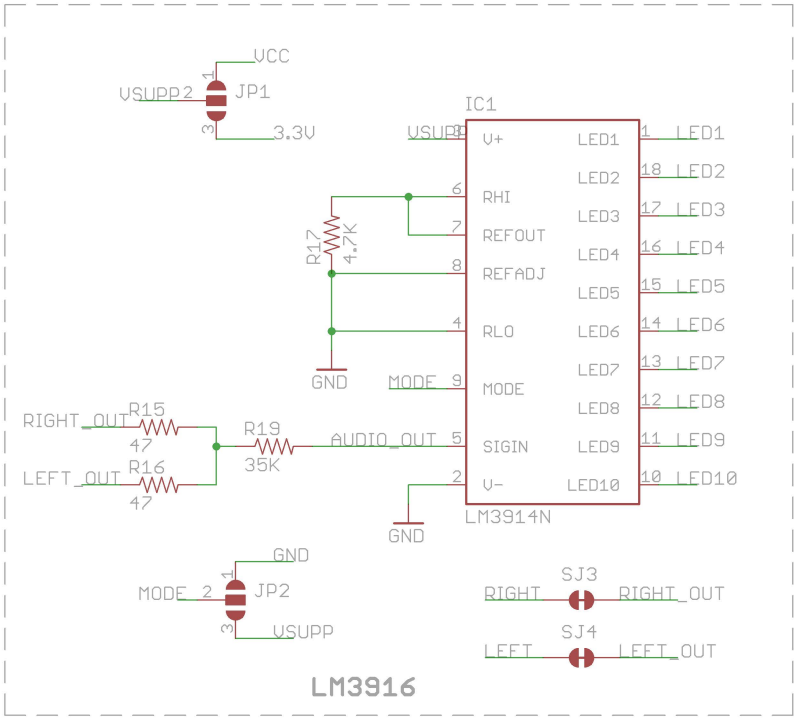

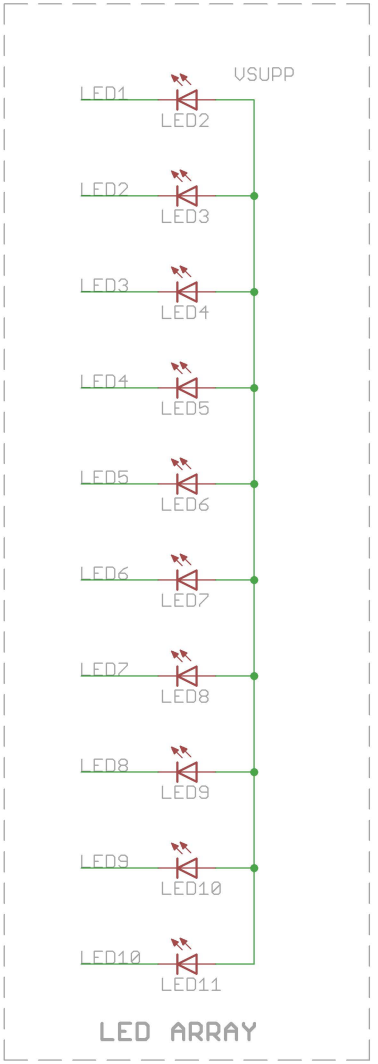

ZeeSoC_mp3_Shield_1.0

2/24/2015 8:58:51 PM

Sheet: 2/2