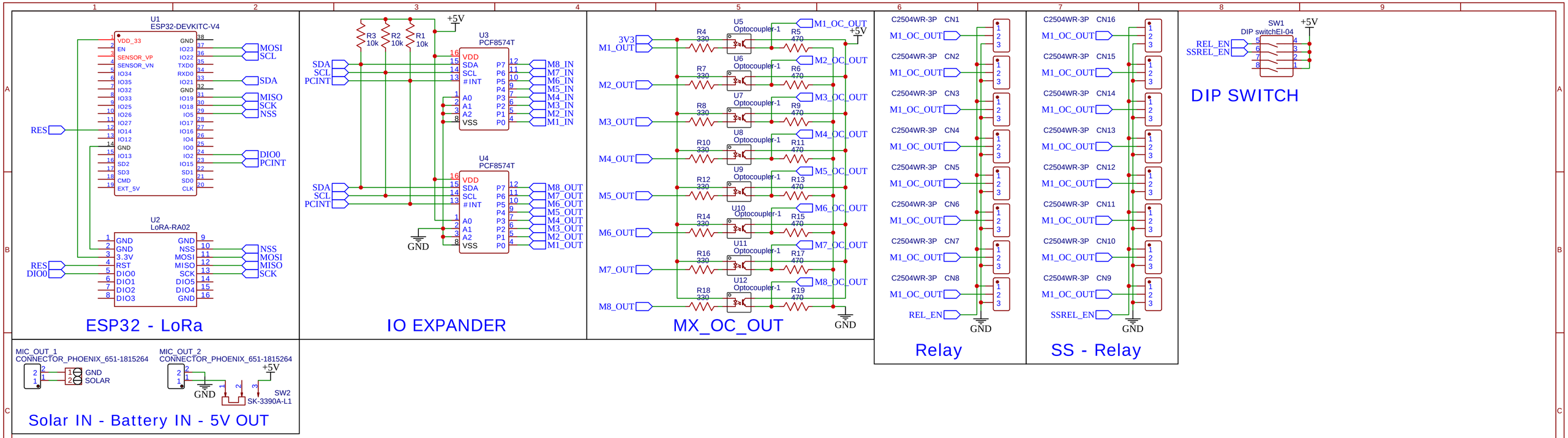

TITLE: Sheet_1	REV: 1.0
嘉立创EDA	Company: Frenzi Tech
	Sheet: 1/1
	Date: 2023-03-28 Drawn By: frenziopen