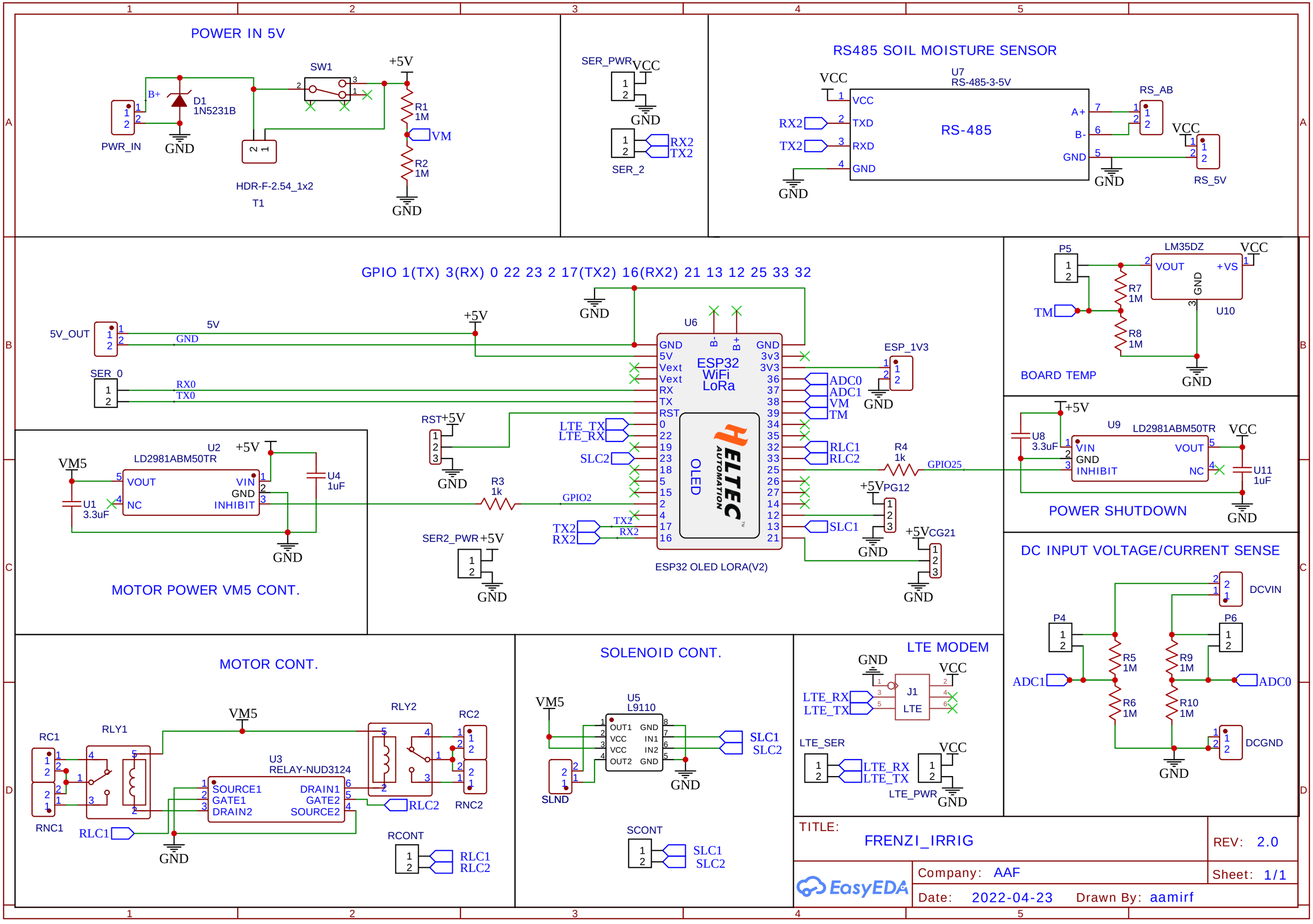
POWER IN 5V
PWR_IN
B+
D1
1N5231B
GND
SW1
+5V
R1
1M
VM
R2
1M
HDR-F-2.54_1x2
T1
SER_PWR
VCC
SER_2
RX2
TX2
RS485 SOIL MOISTURE SENSOR
U7
RS-485-3-5V
RS-485
VCC
TXD
RXD
A+
B-
RS_AB
RS_5V
GPIO 1(TX) 3(RX) 0 22 23 2 17(TX2) 16(RX2) 21 13 12 25 33 32
5V_OUT
5V
SER_0
RX0
TX0
U6
ESP32
WiFi
LoRa
OLED
ESP32 OLED LORA(V2)
ESP_1V3
ADC0
ADC1
VM
TM
LTE_TX
LTE_RX
SLC2
RLC1
RLC2
SLC1
RST
GPIO2
GPIO25
PG12
CG21
R3
1k
R4
1k
SER2_PWR
P5
LM35DZ
VOUT
+VS
R7
1M
R8
1M
U10
BOARD TEMP
U8
3.3uF
U9
LD2981ABM50TR
VIN
INHIBIT
NC
U11
1uF
POWER SHUTDOWN
U2
LD2981ABM50TR
U1
3.3uF
U4
1uF
MOTOR POWER VM5 CONT.
DC INPUT VOLTAGE/CURRENT SENSE
DCVIN
P4
P6
R5
1M
R6
1M
R9
1M
R10
1M
DCGND
MOTOR CONT.
RC1
RNC1
RLY1
RLY2
RC2
RNC2
U3
RELAY-NUD3124
SOURCE1
GATE1
DRAIN2
DRAIN1
GATE2
SOURCE2
RCONT
SOLENOID CONT.
U5
L9110
OUT1
VCC
OUT2
IN1
IN2
SLND
SCONT
LTE MODEM
J1
LTE
LTE_SER
LTE_PWR
TITLE:
FRENZI_IRRIG
REV: 2.0
Company: AAF
Sheet: 1/1
Date: 2022-04-23
Drawn By: aamirf
EasyEDA