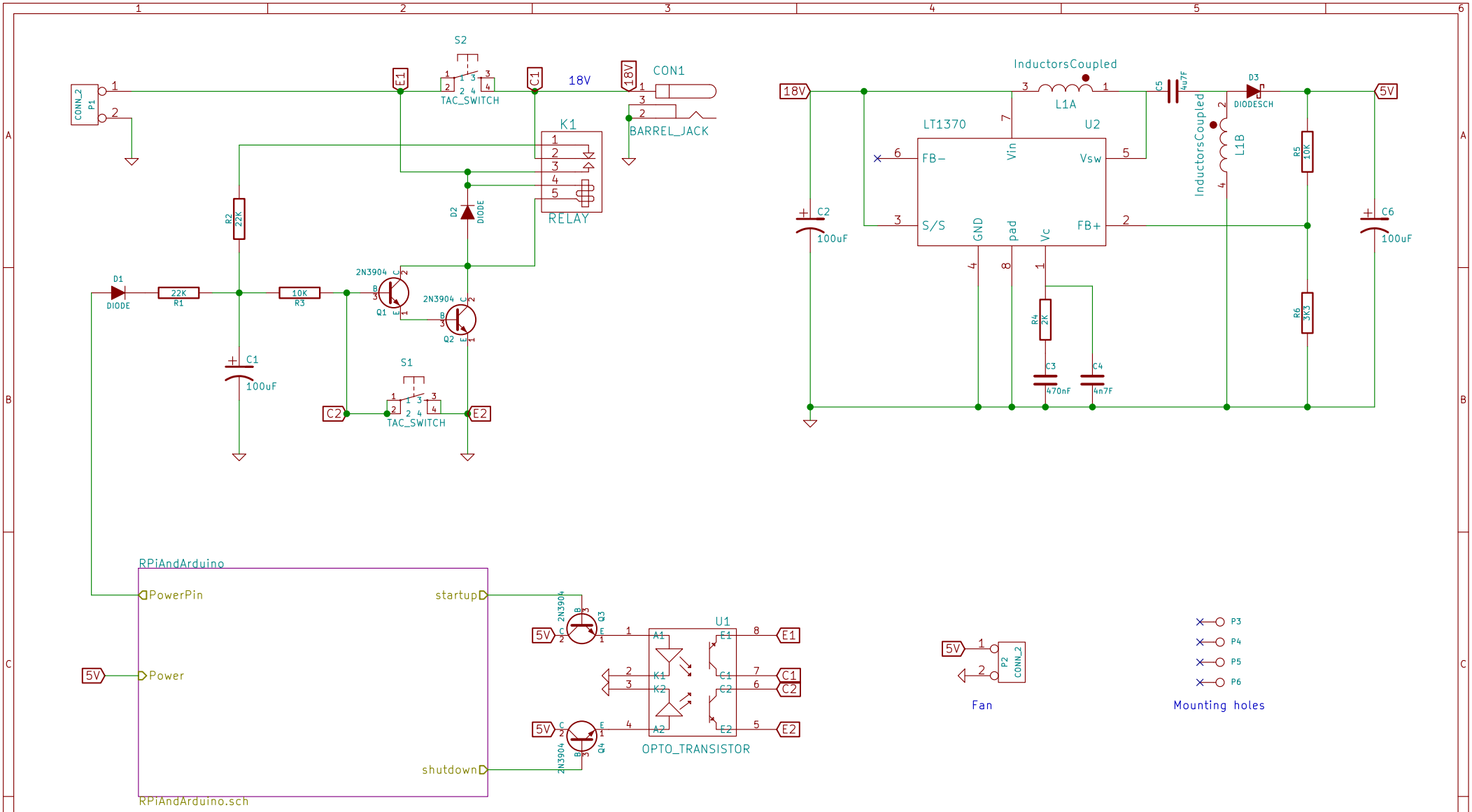

Sheet: /
File: radioPi.sch

Title:

Size: A4	Date:	**Rev:**
KiCad E.D.A. kicad (2015-06-26 BZR 5832)-product		Id: 1/2

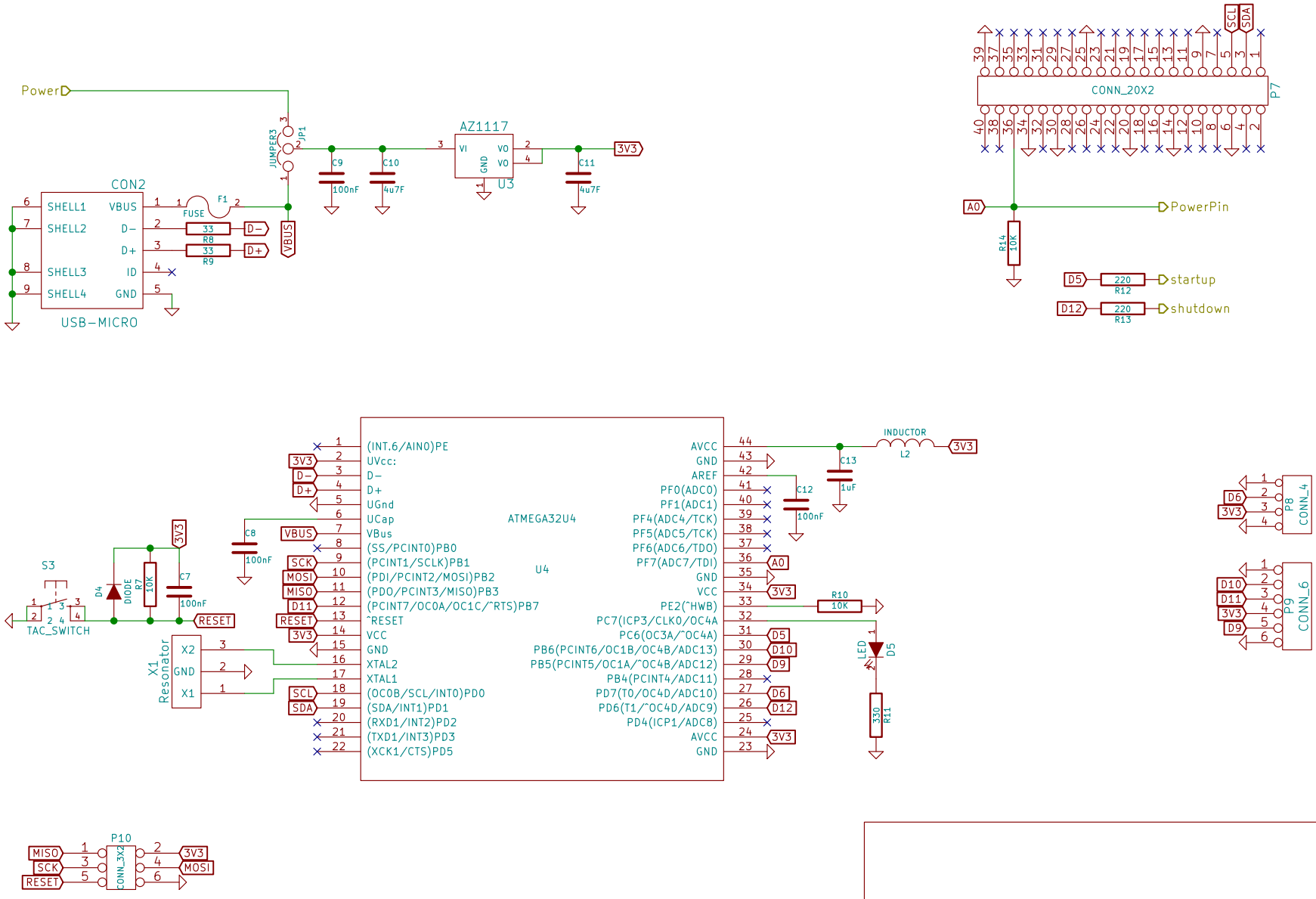

Sheet: /RPiAndArduino/
File: RPiAndArduino.sch

Title:

Size: A4	Date:	Rev:
KiCad E.D.A. kicad (2015-06-26 BZR 5832)-product		Id: 2/2