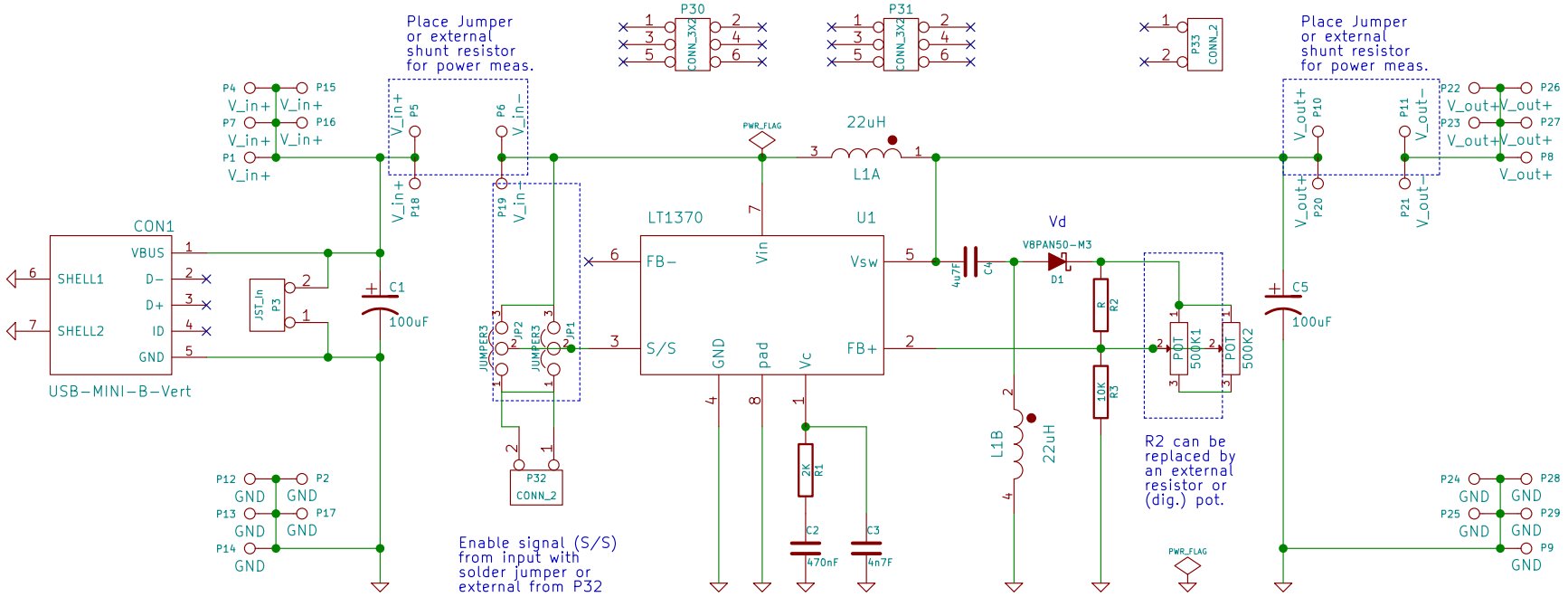

Sepic based on the LT1370
single-sided board
breadboard - friendly (some unused extra pins and doubled components)
output-voltage can be defined by R2, or (dig.) Potentiometer

Sheet: /
File: Sepic.sch

Title: SEPIC Module

Size: A4	Date: 2016-01-12	Rev: A
KiCad E.D.A. kicad (2015-06-26 BZR 5832)-product		Id: 1/1