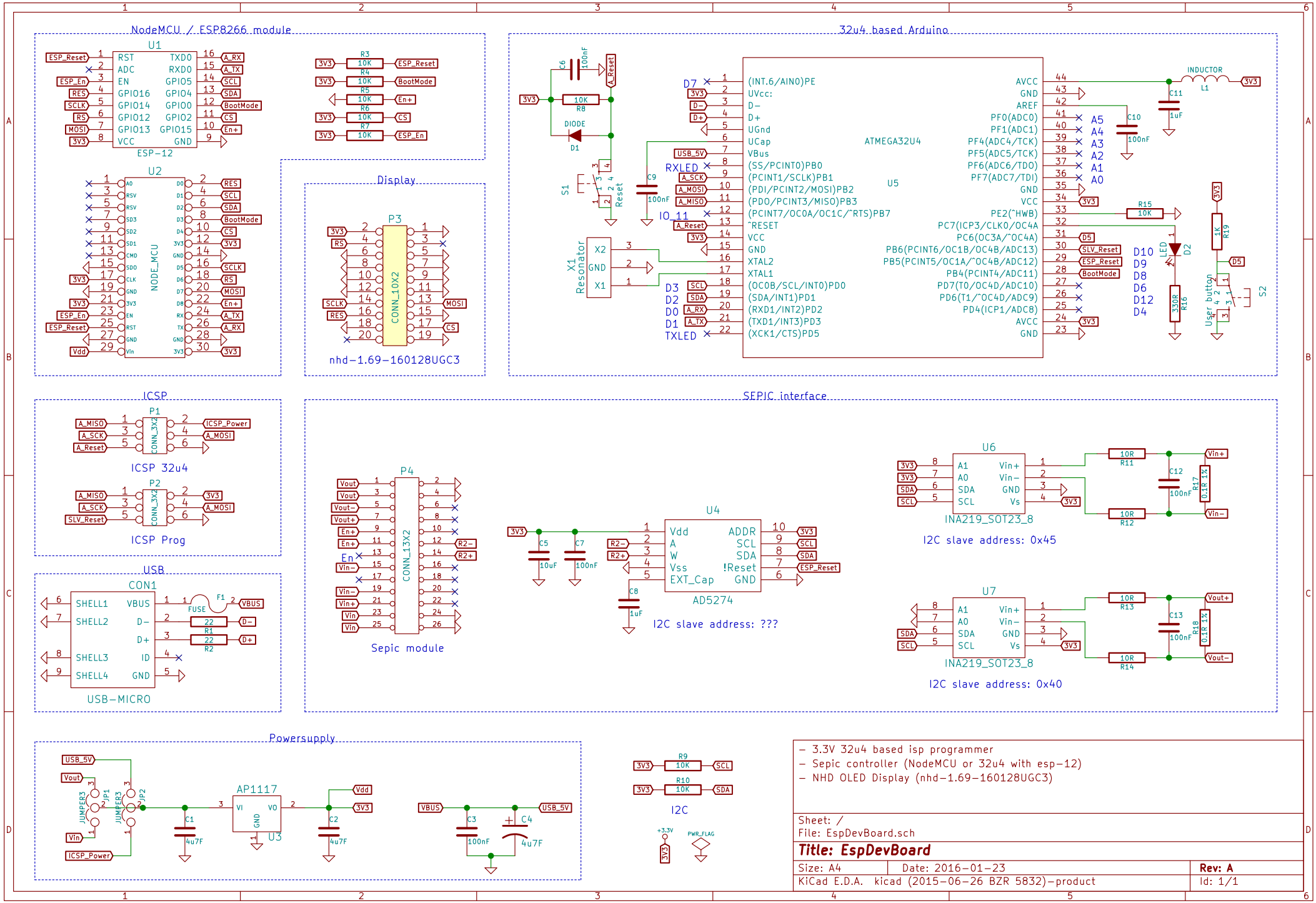
NodeMCU / ESP8266 module
U1
ESP-12
U2
NODE_MCU
Display
P3
CONN_10X2
nhd-1.69-160128UGC3
32u4 based Arduino
ATMEGA32U4
U5
INDUCTOR
L1
Resonator
X1
Reset
S1
User button
S2
LED
D2
ICSP
P1
CONN_3X2
ICSP 32u4
P2
ICSP Prog
USB
CON1
USB-MICRO
FUSE
F1
SEPIC interface
P4
CONN_13X2
Sepic module
U4
AD5274
I2C slave address: ???
U6
INA219_SOT23_8
I2C slave address: 0x45
U7
INA219_SOT23_8
I2C slave address: 0x40
Powersupply
AP1117
U3
JUMPER3
JP1
JP2
I2C
PWR_FLAG
- 3.3V 32u4 based isp programmer
- Sepic controller (NodeMCU or 32u4 with esp-12)
- NHD OLED Display (nhd-1.69-160128UGC3)
Sheet: /
File: EspDevBoard.sch
Title: EspDevBoard
Size: A4
Date: 2016-01-23
Rev: A
KiCad E.D.A. kicad (2015-06-26 BZR 5832)-product
Id: 1/1