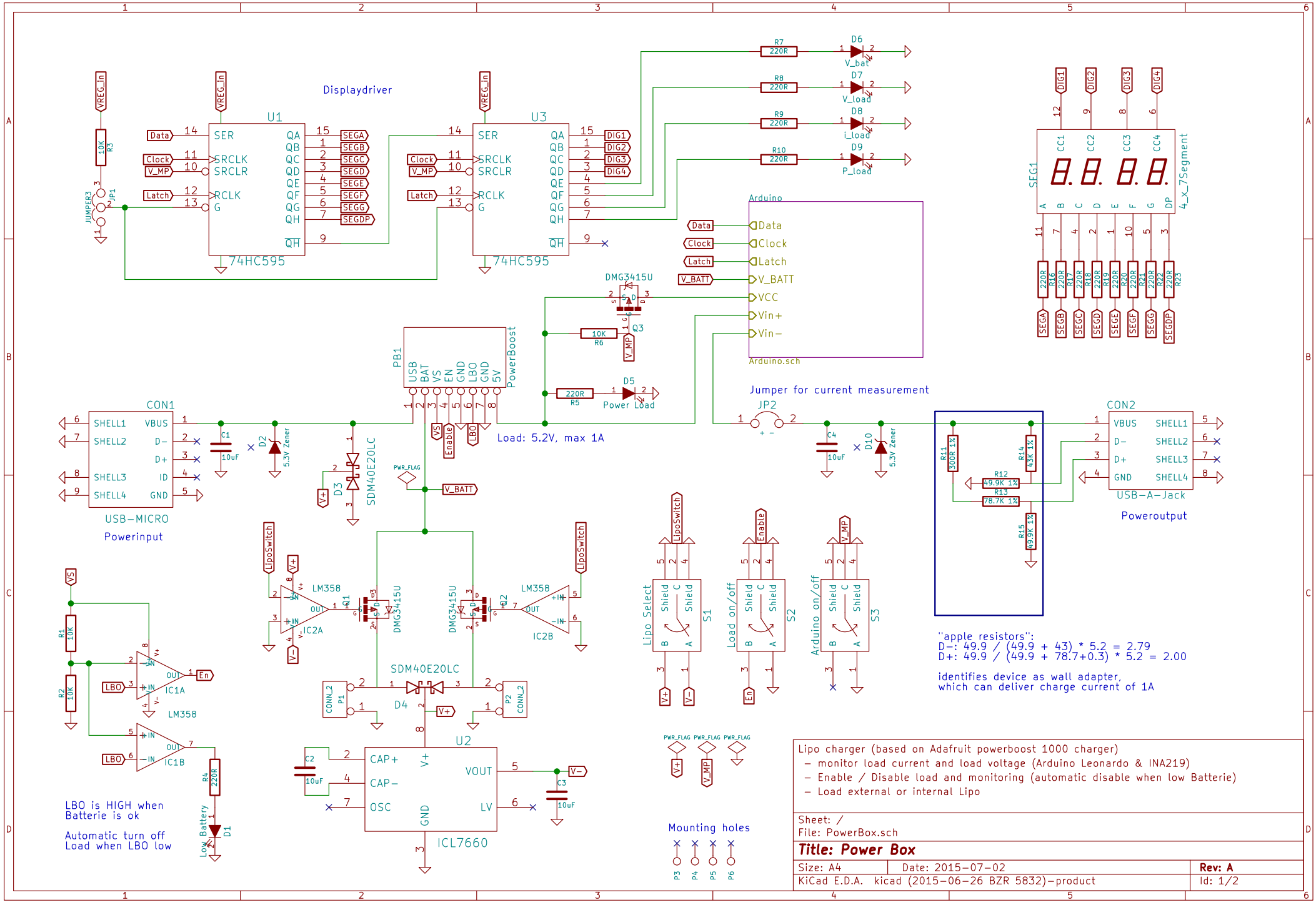

Lipo charger (based on Adafruit powerboost 1000 charger)
- monitor load current and load voltage (Arduino Leonardo & INA219)
- Enable / Disable load and monitoring (automatic disable when low Batterie)
- Load external or internal Lipo

Sheet: /
File: PowerBox.sch

Title: Power Box

Size: A4	Date: 2015−07−02	Rev: A
KiCad E.D.A. kicad (2015−06−26 BZR 5832)−product		Id: 1/2

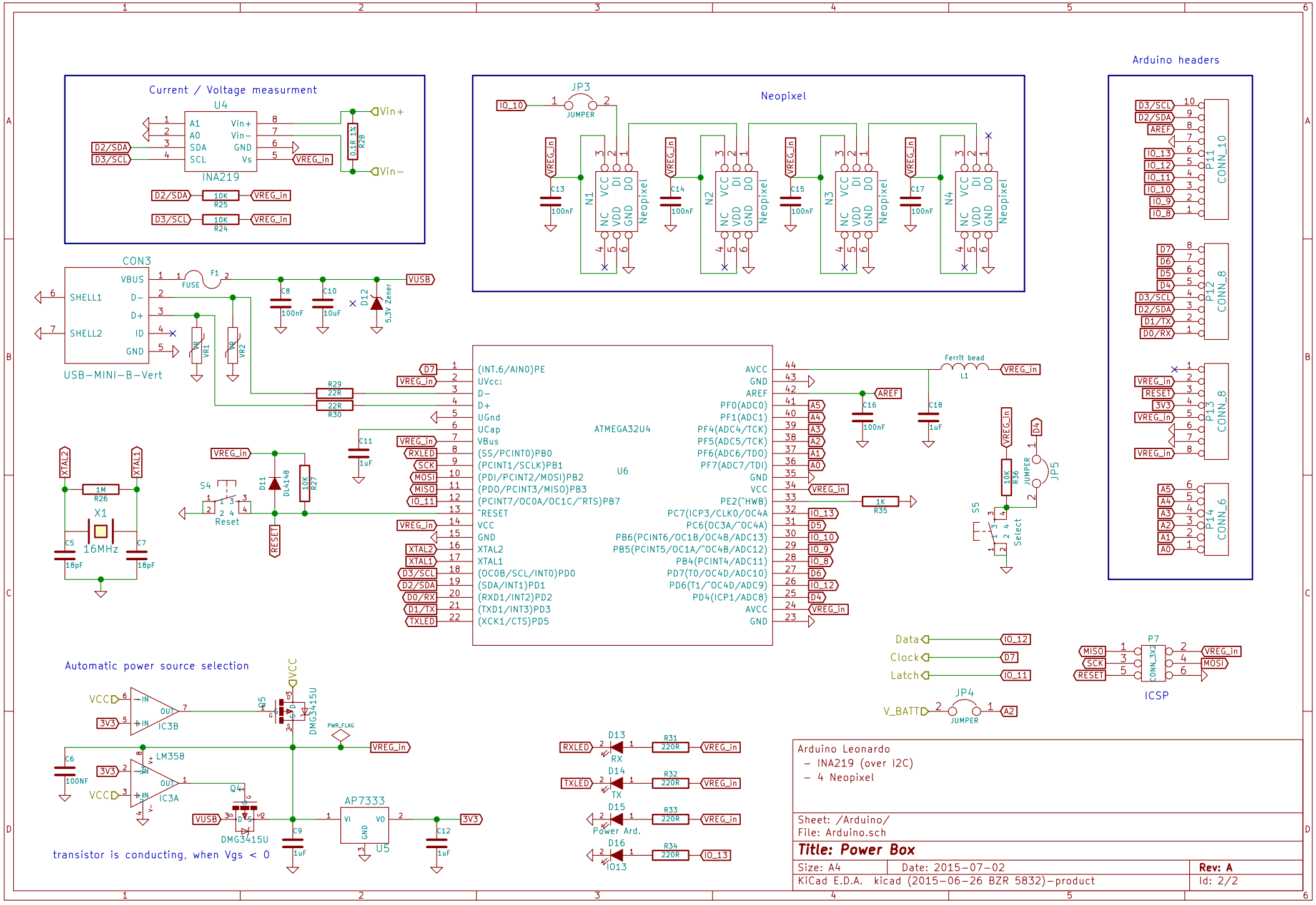

Arduino Leonardo
- INA219 (over I2C)
- 4 Neopixel

Sheet: /Arduino/
File: Arduino.sch

Title: Power Box

Size: A4	Date: 2015-07-02	Rev: A
KiCad E.D.A. kicad (2015-06-26 BZR 5832)-product		Id: 2/2