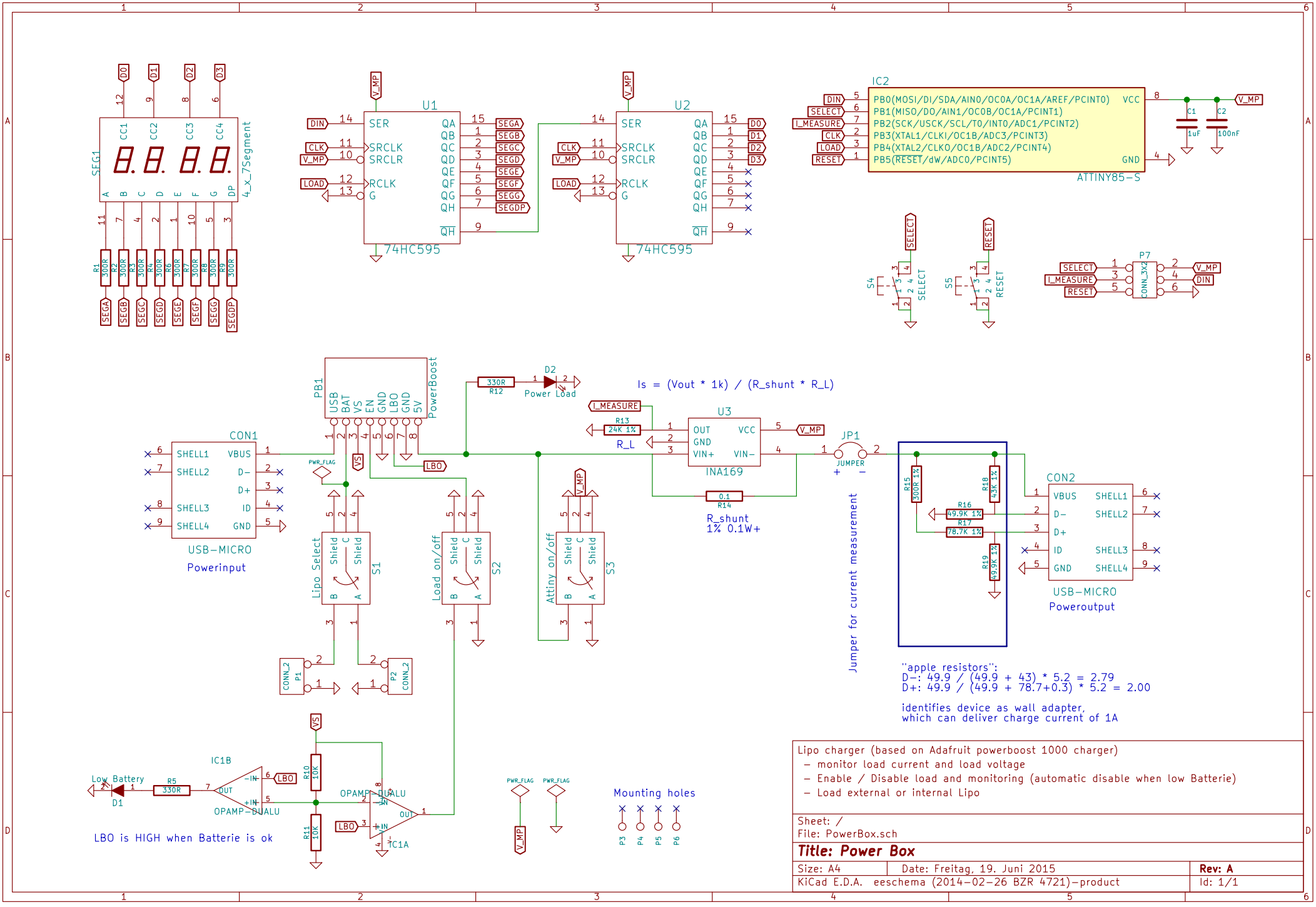
SEG1
4_x_7Segment
D0
D1
D2
D3
CC1
CC2
CC3
CC4
A B C D E F G DP
R1 300R
R2 300R
R3 300R
R4 300R
R6 300R
R7 300R
R8 300R
R9 300R
SEGA
SEGB
SEGC
SEGD
SEGE
SEGF
SEGG
SEGDP
U1
74HC595
U2
74HC595
V_MP
DIN
CLK
LOAD
SER
SRCLK
SRCLR
RCLK
G
QA QB QC QD QE QF QG QH
IC2
ATTINY85-S
PB0(MOSI/DI/SDA/AIN0/OC0A/OC1A/AREF/PCINT0)
PB1(MISO/DO/AIN1/OC0B/OC1A/PCINT1)
PB2(SCK/USCK/SCL/T0/INT0/ADC1/PCINT2)
PB3(XTAL1/CLKI/OC1B/ADC3/PCINT3)
PB4(XTAL2/CLKO/OC1B/ADC2/PCINT4)
PB5(RESET/dW/ADC0/PCINT5)
VCC
GND
SELECT
I_MEASURE
RESET
C1 1uF
C2 100nF
S4 SELECT
S5 RESET
P7 CONN_3X2
PB1 PowerBoost
USB BAT VS EN GND LBO GND 5V
CON1
USB-MICRO
Powerinput
SHELL1 SHELL2 SHELL3 SHELL4
VBUS D- D+ ID GND
PWR_FLAG
VS
LBO
330R R12
D2
Power Load
Is = (Vout * 1k) / (R_shunt * R_L)
R13 24K 1%
R_L
U3
INA169
OUT GND VIN+ VCC VIN-
R14 0.1
R_shunt
1% 0.1W+
JP1
JUMPER
Jumper for current measurement
R15 300R 1%
R16 49.9K 1%
R17 78.7K 1%
R18 43K 1%
R19 49.9K 1%
CON2
USB-MICRO
Poweroutput
Lipo Select
Load on/off
Attiny on/off
S1
S2
S3
Shield
P1 CONN_2
P2 CONN_2
"apple resistors":
D-: 49.9 / (49.9 + 43) * 5.2 = 2.79
D+: 49.9 / (49.9 + 78.7+0.3) * 5.2 = 2.00
identifies device as wall adapter,
which can deliver charge current of 1A
Low Battery
D1
R5 330R
IC1B
OPAMP-DUALU
R10 10K
R11 10K
IC1A
LBO is HIGH when Batterie is ok
Mounting holes
P3 P4 P5 P6
Lipo charger (based on Adafruit powerboost 1000 charger)
- monitor load current and load voltage
- Enable / Disable load and monitoring (automatic disable when low Batterie)
- Load external or internal Lipo
Sheet: /
File: PowerBox.sch
Title: Power Box
Size: A4
Date: Freitag, 19. Juni 2015
Rev: A
KiCad E.D.A. eeschema (2014-02-26 BZR 4721)-product
Id: 1/1