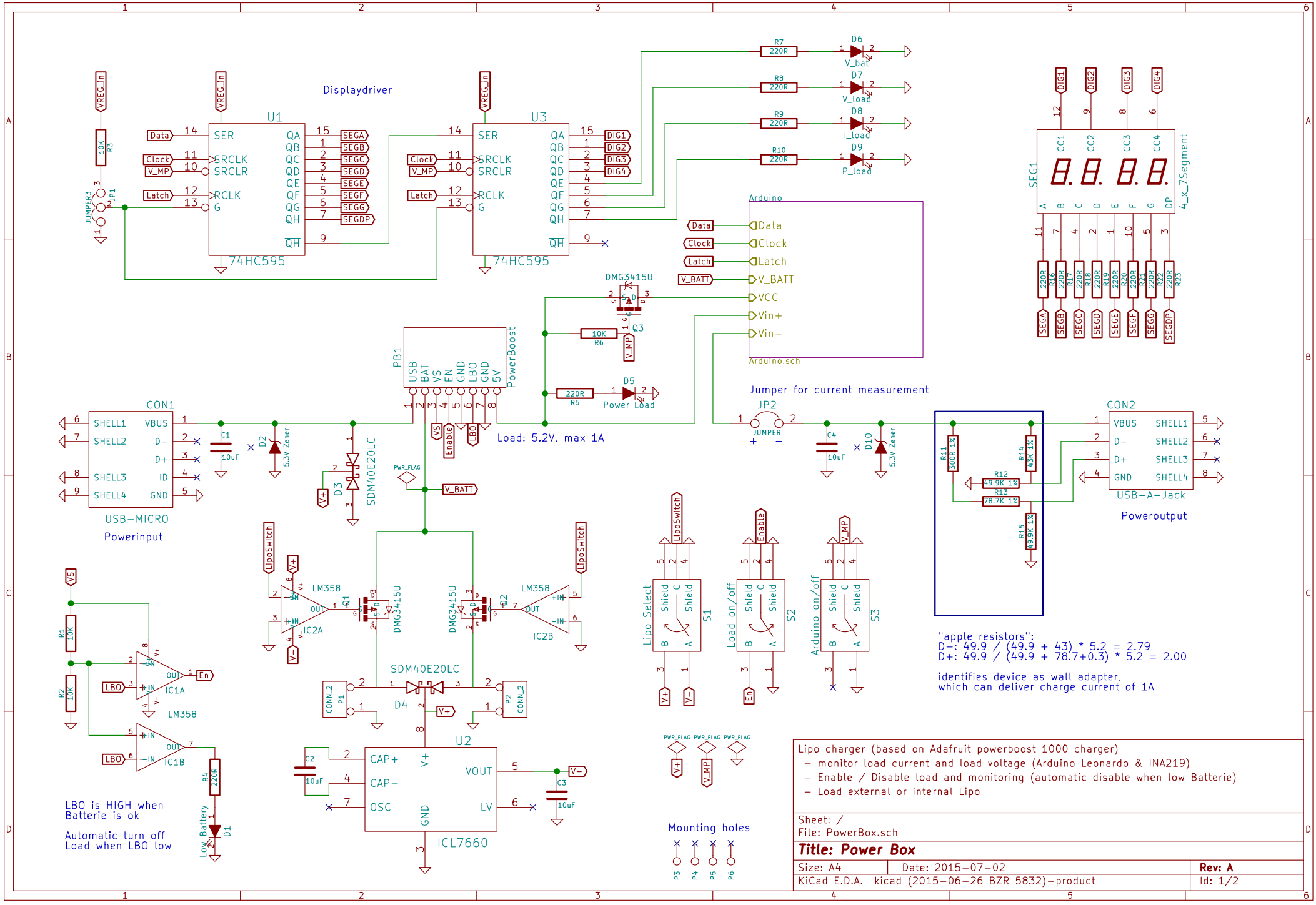
Displaydriver
U1
74HC595
U3
74HC595
Arduino
Arduino.sch
4_x_7Segment
SEG1
PB1
PowerBoost
CON1
USB-MICRO
Powerinput
Load: 5.2V, max 1A
Jumper for current measurement
JP2
JUMPER
CON2
USB-A-Jack
Poweroutput
SDM40E20LC
DMG3415U
LM358
IC2A
IC2B
IC1A
IC1B
U2
ICL7660
Lipo Select
Load on/off
Arduino on/off
S1
S2
S3
"apple resistors":
D-: 49.9 / (49.9 + 43) * 5.2 = 2.79
D+: 49.9 / (49.9 + 78.7+0.3) * 5.2 = 2.00
identifies device as wall adapter,
which can deliver charge current of 1A
LBO is HIGH when
Batterie is ok
Automatic turn off
Load when LBO low
Mounting holes
Lipo charger (based on Adafruit powerboost 1000 charger)
- monitor load current and load voltage (Arduino Leonardo & INA219)
- Enable / Disable load and monitoring (automatic disable when low Batterie)
- Load external or internal Lipo
Sheet: /
File: PowerBox.sch
Title: Power Box
Size: A4
Date: 2015-07-02
Rev: A
KiCad E.D.A. kicad (2015-06-26 BZR 5832)-product
Id: 1/2

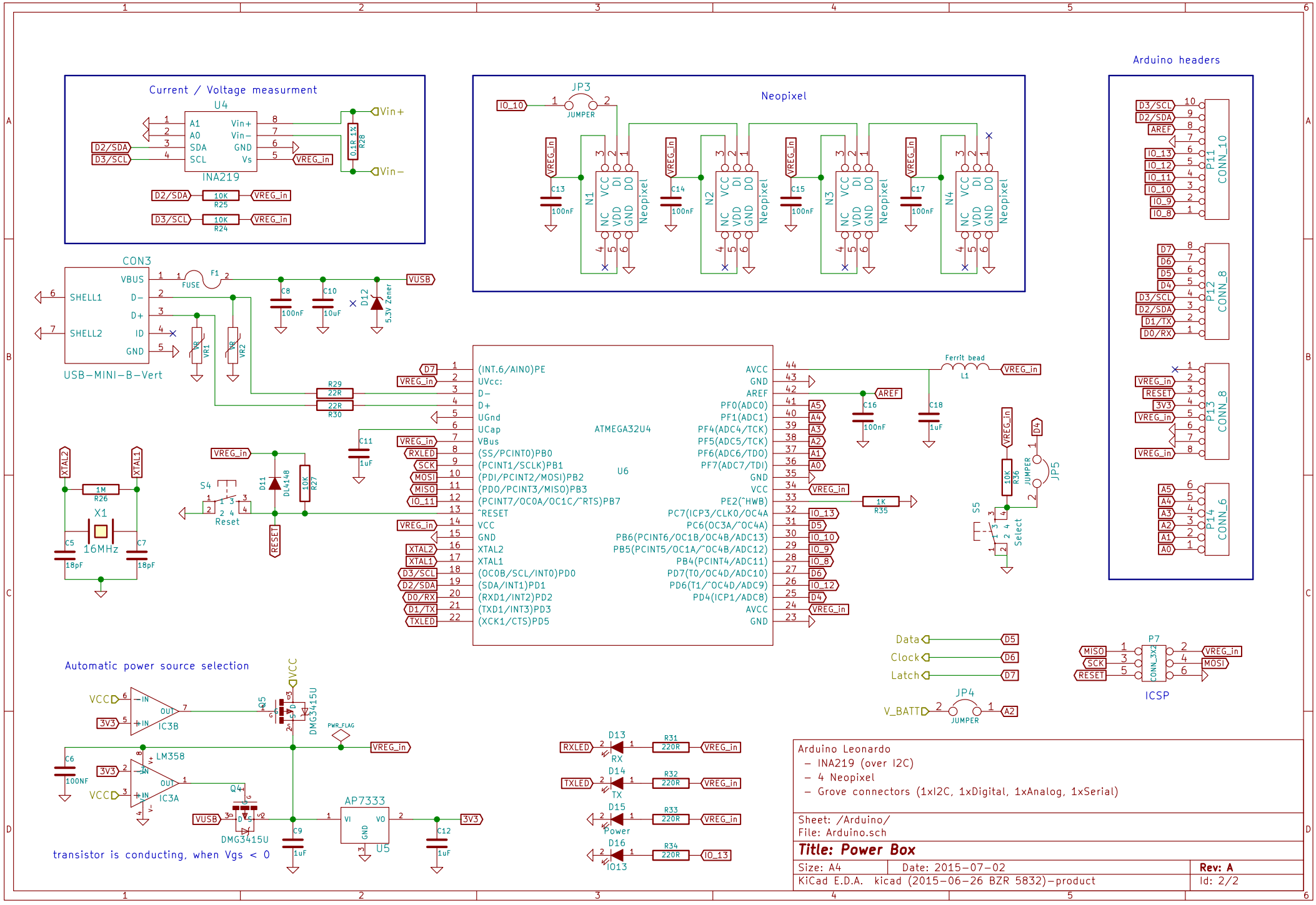
Current / Voltage measurment
U4
INA219
A1
A0
SDA
SCL
Vin+
Vin−
GND
Vs
D2/SDA
D3/SCL
VREG_in
Vin+
Vin−
0.1R 1%
R28
10K
R25
R24
Neopixel
JP3
JUMPER
IO_10
N1
N2
N3
N4
VCC
DI
DO
NC
VDD
GND
C13
C14
C15
C17
100nF
CON3
VBUS
D−
D+
ID
GND
SHELL1
SHELL2
USB−MINI−B−Vert
F1
FUSE
C8
C10
10uF
D12
5.3V Zener
VUSB
VR1
VR2
R29
R30
22R
ATMEGA32U4
U6
(INT.6/AIN0)PE
UVcc:
D−
D+
UGnd
UCap
VBus
(SS/PCINT0)PB0
(PCINT1/SCLK)PB1
(PDI/PCINT2/MOSI)PB2
(PDO/PCINT3/MISO)PB3
(PCINT7/OC0A/OC1C/^RTS)PB7
^RESET
VCC
GND
XTAL2
XTAL1
(OC0B/SCL/INT0)PD0
(SDA/INT1)PD1
(RXD1/INT2)PD2
(TXD1/INT3)PD3
(XCK1/CTS)PD5
AVCC
GND
AREF
PF0(ADC0)
PF1(ADC1)
PF4(ADC4/TCK)
PF5(ADC5/TCK)
PF6(ADC6/TDO)
PF7(ADC7/TDI)
GND
VCC
PE2(^HWB)
PC7(ICP3/CLK0/OC4A
PC6(OC3A/^OC4A)
PB6(PCINT6/OC1B/OC4B/ADC13)
PB5(PCINT5/OC1A/^OC4B/ADC12)
PB4(PCINT4/ADC11)
PD7(T0/OC4D/ADC10)
PD6(T1/^OC4D/ADC9)
PD4(ICP1/ADC8)
AVCC
GND
Ferrit bead
L1
C16
100nF
C18
1uF
C11
1uF
1K
R35
10K
R36
JUMPER
JP5
S5
Select
XTAL2
XTAL1
1M
R26
X1
16MHz
C5
C7
18pF
S4
Reset
D11
DL4148
10K
R27
RESET
Arduino headers
P11
CONN_10
P12
CONN_8
P13
CONN_8
P14
CONN_6
Data
Clock
Latch
V_BATT
JP4
JUMPER
P7
CONN_3X2
MISO
SCK
RESET
ICSP
Automatic power source selection
IC3B
IC3A
LM358
Q5
DMG3415U
PWR_FLAG
Q4
DMG3415U
C6
100NF
C9
1uF
AP7333
U5
C12
1uF
3V3
transistor is conducting, when Vgs < 0
D13
RX
D14
TX
D15
Power
D16
IO13
R31
R32
R33
R34
220R
Arduino Leonardo
– INA219 (over I2C)
– 4 Neopixel
– Grove connectors (1xI2C, 1xDigital, 1xAnalog, 1xSerial)
Sheet: /Arduino/
File: Arduino.sch
Title: Power Box
Size: A4
Date: 2015−07−02
Rev: A
KiCad E.D.A. kicad (2015−06−26 BZR 5832)−product
Id: 2/2