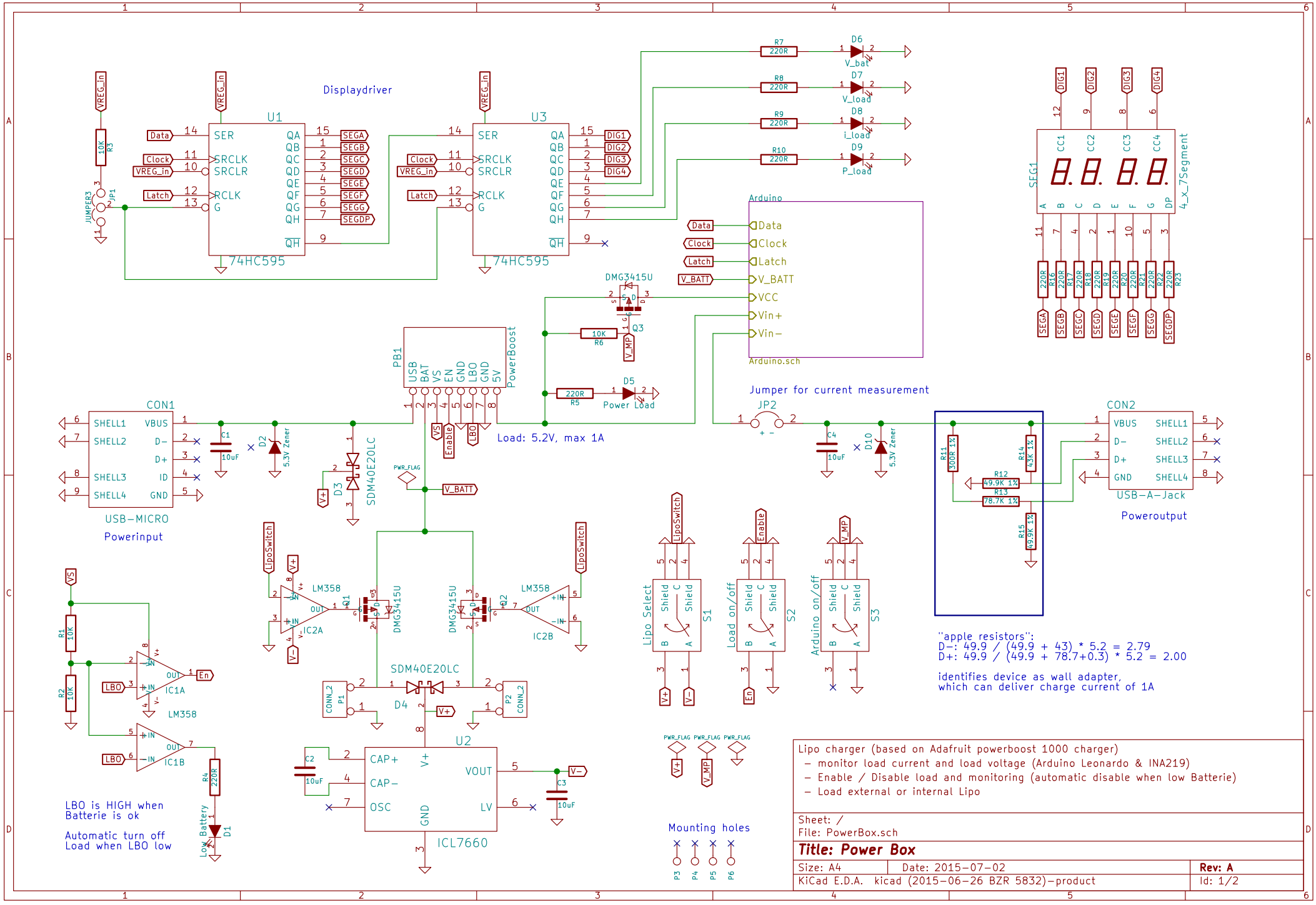
Displaydriver
U1
74HC595
U3
74HC595
SER
SRCLK
SRCLR
RCLK
G
QA
QB
QC
QD
QE
QF
QG
QH
QH
Data
Clock
Latch
VREG_in
SEGA
SEGB
SEGC
SEGD
SEGE
SEGF
SEGG
SEGDP
DIG1
DIG2
DIG3
DIG4
R7 220R
R8 220R
R9 220R
R10 220R
D6
D7
D8
D9
V_bat
V_load
i_load
P_load
SEG1
4_x_7Segment
CC1
CC2
CC3
CC4
A
B
C
D
E
F
G
DP
R16 220R
R17 220R
R18 220R
R19 220R
R20 220R
R21 220R
R22 220R
R23 220R
Arduino
Data
Clock
Latch
V_BATT
VCC
Vin+
Vin−
Arduino.sch
DMG3415U
Q3
10K R6
V_MP
PB1
USB
BAT
VS
EN
GND
LBO
GND
5V
PowerBoost
220R R5
D5
Power Load
Load: 5.2V, max 1A
Jumper for current measurement
JP2
CON1
SHELL1
SHELL2
SHELL3
SHELL4
VBUS
D−
D+
ID
GND
USB−MICRO
Powerinput
C1 10uF
D2 5.3V Zener
D3 SDM40E20LC
PWR_FLAG
V_BATT
C4 10uF
D10 5.3V Zener
R11 300R 1%
R12 49.9K 1%
R13 78.7K 1%
R14 43K 1%
R15 49.9K 1%
CON2
USB−A−Jack
Poweroutput
LipoSwitch
LM358
IC2A
IC2B
Q1
Q2
DMG3415U
SDM40E20LC
D4
CONN_2
P1
P2
U2
ICL7660
CAP+
CAP−
OSC
V+
GND
VOUT
LV
C2 10uF
C3 10uF
V−
Lipo Select
S1
Load on/off
S2
Arduino on/off
S3
Shield
En
Enable
V+
V−
R1 10K
R2 10K
IC1A
IC1B
LM358
LBO
R4 220R
D1
Low Battery
LBO is HIGH when
Batterie is ok
Automatic turn off
Load when LBO low
"apple resistors":
D−: 49.9 / (49.9 + 43) * 5.2 = 2.79
D+: 49.9 / (49.9 + 78.7+0.3) * 5.2 = 2.00
identifies device as wall adapter,
which can deliver charge current of 1A
PWR_FLAG
Mounting holes
P3
P4
P5
P6
Lipo charger (based on Adafruit powerboost 1000 charger)
– monitor load current and load voltage (Arduino Leonardo & INA219)
– Enable / Disable load and monitoring (automatic disable when low Batterie)
– Load external or internal Lipo
Sheet: /
File: PowerBox.sch
Title: Power Box
Size: A4
Date: 2015−07−02
Rev: A
KiCad E.D.A. kicad (2015−06−26 BZR 5832)−product
Id: 1/2

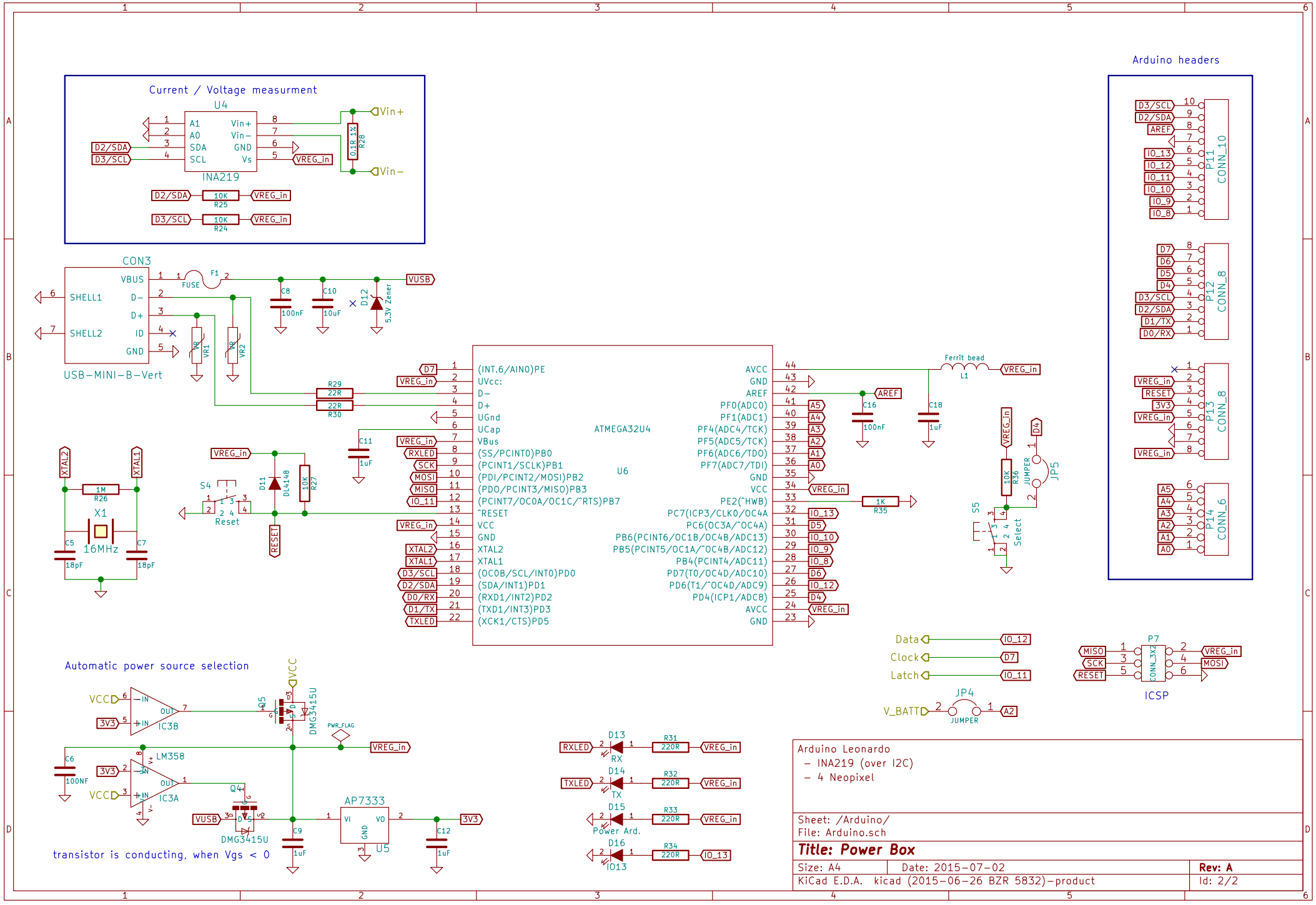
Current / Voltage measurment
U4
INA219
A1
A0
SDA
SCL
Vin+
Vin−
GND
Vs
D2/SDA
D3/SCL
VREG_in
0.1R 1%
R28
10K
R25
R24
CON3
VBUS
D−
D+
ID
GND
SHELL1
SHELL2
USB−MINI−B−Vert
FUSE
F1
C8
100nF
C10
10uF
D12
5.3V Zener
VUSB
VR1
VR2
R29
22R
R30
ATMEGA32U4
U6
(INT.6/AIN0)PE
UVcc:
D−
D+
UGnd
UCap
VBus
(SS/PCINT0)PB0
(PCINT1/SCLK)PB1
(PDI/PCINT2/MOSI)PB2
(PDO/PCINT3/MISO)PB3
(PCINT7/OC0A/OC1C/^RTS)PB7
^RESET
VCC
GND
XTAL2
XTAL1
(OC0B/SCL/INT0)PD0
(SDA/INT1)PD1
(RXD1/INT2)PD2
(TXD1/INT3)PD3
(XCK1/CTS)PD5
AVCC
GND
AREF
PF0(ADC0)
PF1(ADC1)
PF4(ADC4/TCK)
PF5(ADC5/TCK)
PF6(ADC6/TDO)
PF7(ADC7/TDI)
GND
VCC
PE2(^HWB)
PC7(ICP3/CLK0/OC4A)
PC6(OC3A/^OC4A)
PB6(PCINT6/OC1B/OC4B/ADC13)
PB5(PCINT5/OC1A/^OC4B/ADC12)
PB4(PCINT4/ADC11)
PD7(T0/OC4D/ADC10)
PD6(T1/^OC4D/ADC9)
PD4(ICP1/ADC8)
AVCC
GND
C11
1uF
C16
100nF
C18
1uF
Ferrit bead
L1
1K
R35
XTAL2
XTAL1
1M
R26
X1
16MHz
C5
18pF
C7
18pF
S4
Reset
D11
DL4148
10K
R27
RESET
S5
Select
10K
R36
JUMPER
JP5
Arduino headers
P11
CONN_10
P12
CONN_8
P13
CONN_8
P14
CONN_6
Data
Clock
Latch
JP4
V_BATT
JUMPER
P7
CONN_3X2
MISO
SCK
RESET
MOSI
ICSP
Automatic power source selection
IC3B
IC3A
LM358
C6
100NF
Q5
DMG3415U
PWR_FLAG
Q4
DMG3415U
C9
1uF
AP7333
U5
C12
1uF
3V3
transistor is conducting, when Vgs < 0
D13
RX
D14
TX
D15
Power Ard.
D16
IO13
R31
R32
R33
R34
220R
Arduino Leonardo
– INA219 (over I2C)
– 4 Neopixel
Sheet: /Arduino/
File: Arduino.sch
Title: Power Box
Size: A4
Date: 2015−07−02
Rev: A
KiCad E.D.A. kicad (2015−06−26 BZR 5832)−product
Id: 2/2