IoT Smart Weather Station Hardware

Yu Liu
College of Engineering, University of Florida

Faculty mentor: William Eisenstadt, Department of Electrical and Computer Engineering

Abstract

The objective is to create a low-cost, robust, and modular Internet of Things (IoT) weather station that can serve as a solution for 3rd world countries like Haiti, where they do not have the necessary weather/climate data that can help support future agricultural growth, provide weather pattern data for public safety and infrastructure. IoT weather stations have the biggest impact in 3rd world countries with the potential to double a country's food production and increase agricultural profits. Our task will be to redesign the weather board to better suit our design needs. We will try to incorporate the new IoT boards that the particle company has released including the Argon and Xenon as well as a new power supply system that will allow solar charging capabilities and a larger battery threshold. Once the station has been completed and tested, we will train a group of technicians to monitor and replace parts on weather stations in the event that it gets damaged or malfunctions. We are hoping to provide a blueprint for cheap IoT weather stations for future generations and decrease barriers due to expensive technological obstacles.

Keywords: IoT, Weather Station, Hardware

Introduction

Many third world countries such as Haiti suffer from their vulnerabilities from natural hazards and disasters. The impact of unforeseen forces of nature have drastic impacts on the country's economic and social well-being. Haiti's agricultural sector accounts for 30% of the country's GDP and only a small portion of the farm land is irrigated giving great potential for future development. With its high susceptibility to hurricanes and changes in weather, their economy cripples every time a natural event occurs. This creates a critical need to build an effective monitoring system that can both present them with the information needed to warn citizens of potential dangers and valuable data to improve their economic yields.

There are a number of factors that limits the country in producing weather monitoring and retrieval technology. There is little to no real time information in the Republic of Haiti which severely limits its ability to reliably produce forecasts. The ineffectiveness of a reliable telecommunications and informatics contributes to the lack of real time information and forecast warnings. There is also a shortage of computers and reliable telecommunications and technological resources to enable such activity. Lastly, even with the hardware resources, there will need to be

some sort of training for the professionals and workers in the area to maintain and properly use such equipment.

This study explores the hardware aspect of MistMakers' IoT Weather station that includes windspeed sensors, soil moisture sensors, pressure sensors, a solar panel, and a variety of other sensors all integrated by a printed circuit board (PCB). This device will be a cost effective and simple to use prototype that can be simply manufactured and resourced to countries like Haiti to provide better and more reliable information which in turn can lead to an increase in the economic and social influence of the country.

Methods: First Generation Weather Station

The IoT weather station, that was designed by UF's MistMakers, incorporates the Particle Photon Microcontroller Unit (MCU) to run all its programs. Particle is the third most popular MCU behind the Raspberry Pi and Arduino and is advantageous due to its on-board Wi-Fi chip and cloud compatibility.

The IoT weather station also utilizes the SparkFun Photon Weather Shield which provides invaluable data such as temperature, humidity, and pressure. This board also provides the flexibility to extend and add on sensors that will read wind speed and wind direction, provide a reading on the amount rainfall within the location and soil moisture readings. The PCB layout for the weather board is shown in Figure 1.

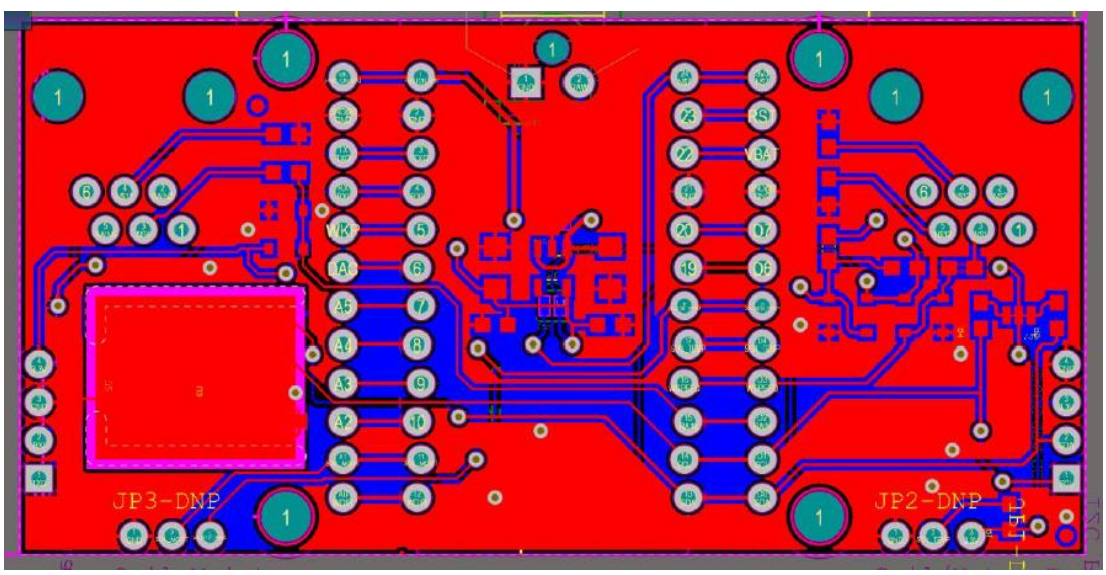

Figure 1. SparkFun Photon Weather Shield PCB Layout

The power for the weather station will be provided using a solar panel which will charge a LiPo battery in addition to the weather board. In the event that the solar panel runs out of the necessary power for the weather station, the LiPo battery will act as the backup power. The LiPo has a 6000 mAh battery capacity and the weather station has an hourly consumption rate of 100mA so the LiPo can provide up to 60 hours of power for the weather station which is sustainable in most situations. Only caveat is in the event of prolonged rainfall and cloudy skies where this unit will be unsustainable, but the likelihood of this happening is very low that it may be ignored until a better model can come into place.

The data from the weather station is uploaded in real time via Wi-Fi to a weather database called Weather Underground where it is stored for viewing. The weather station also utilizes Adafruit's SD Card reader where during an unfortunate occurrence that Wi-Fi is lost due to unexpected connection issues, the data is backed up into a 16GB microSD card and then reuploaded to Weather Underground once Wi-Fi connectivity is reestablished.

The system also uses an external watchdog timer where the main code resets the watchdog and in the event that there is something wrong with the Photon or the weatherboard and the entire system stalls, the watchdog will send a high signal to the reset pin of the photon and restart the board so that it may function properly again. This can be seen in Figure 2. The exact hardware that is used is the SwitchDoc Labs Dual Watchdog Timer which can be seen in Figure 3.

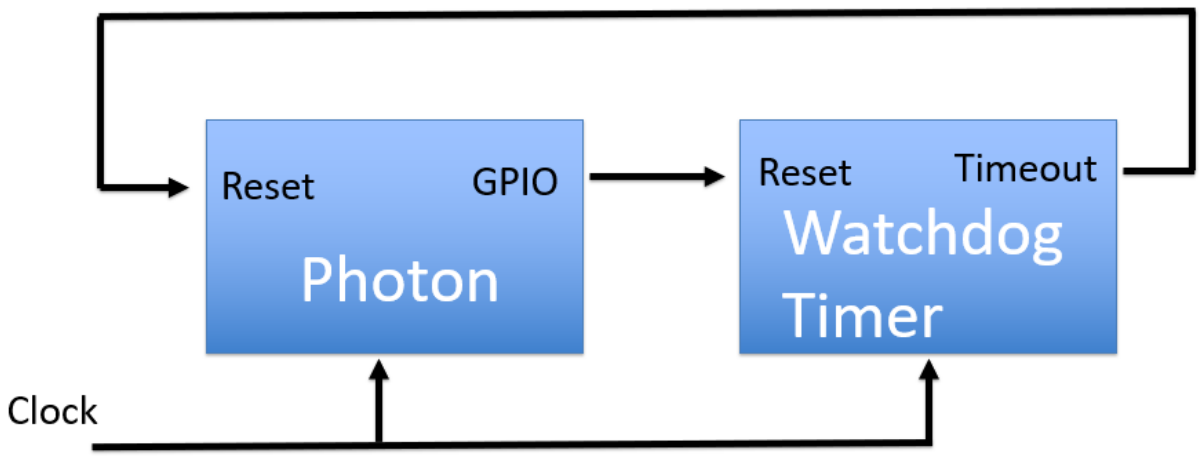

Figure 2. Watchdog functional architecture

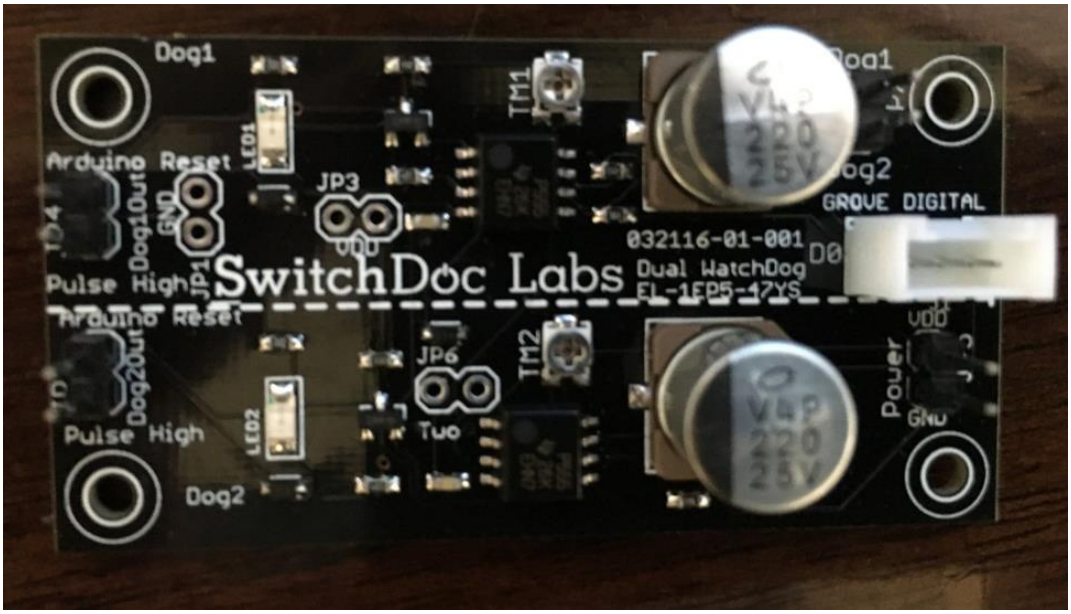

Figure 3 Switchdoc Dual Watchdog Timer

The packaging and robustness of the weather station consists of layered plastic cones that is angled to trickle rain water down due to the nature of its design. Within the cone packaging, there is a waterproof enclosure that further protects the electronics from potential water damage and can be seen in Figure 4.

_.

Figure 4. Packaging and assembly of weather board

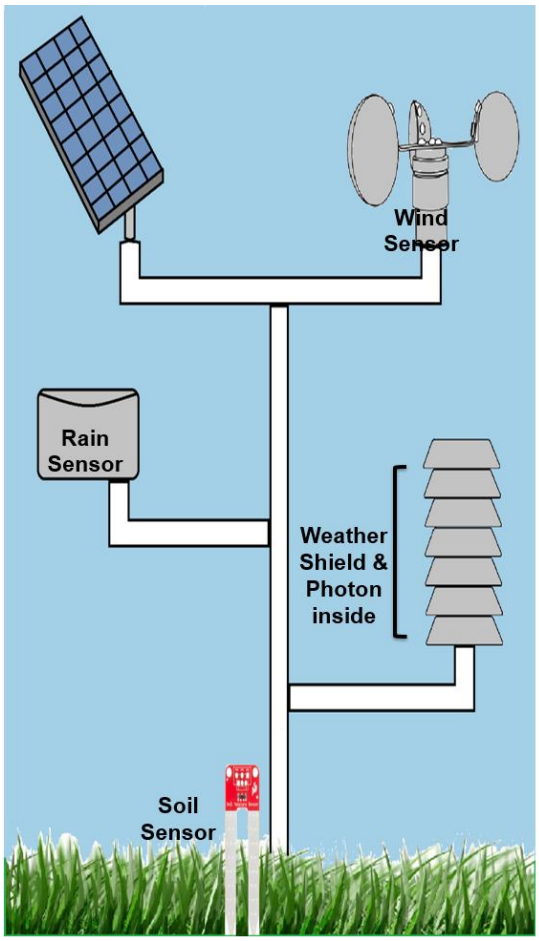

Figure 5. Full Weather Station Design

Results: Second Generation Weather Station

For the second generation which was worked on in the second semester, responsibilities included integrating the existing boards into a maximum of two boards for an easier and modular design. The watchdog timer board and the weather board could be integrated into one board. Within this second-generation weather board, it included a SD card header to easily attach the weather board to the Adafruit SD Card reader. Previous design required manual crossing of wires on the weather board which required soldering and potential misconnections as well as loose wires. The new design also includes Xenon and Argon compatibility which adds an additional element to the weather station, a mesh network. This will allow flexibility for weather stations and allow multiple weather stations to share data amongst each other in a wide area. The second generation will also include a coin cell holder to hold a CR2032 battery to ensure that the weather station retains memory in the event that the power turns off. This will prevent the loss of data and possible reprogramming of the weather station.

The second generation also consisted of a SparkFun Sunny Buddy – MPPT Solar Charger which can be seen in Figure 6. With this addition, the weather station was allowed to have a solar panel of 12V. To ensure proper functionality, the sense_adjust (controlled by a potentiometer) had to be adjusted to 3.4V for a 6V solar. Documentation errors were found, and it was found that R_sense should be much less than the original .2V recommended. A .01 Ohm resistance was used to bump the current up to 1 A which will the necessary charging of about 2000 to 3000 mAh of charging. With all the proper adjustments, the weather station could now take a 12V solar cell and charge both the weather station board and the LiPo properly.

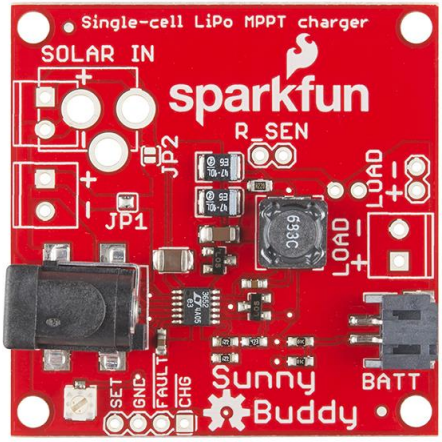

Figure 6. Sunny Buddy Power Board

The PCB design was created in Altium 18. The schematics are shown in Figure 7 and 8, the 2D and 3D layouts can be seen in Figure 9 and 10 and the physical boards are seen in Figure 11 and 12. This design takes the open sourced eagle layout provided by Sparkfun, converts it to Altium format and extends it by the integration of the SD card header, watchdog timer circuit, coin cell holder and the Argon footprint also known as the “Featherwing” footprint as seen in the yellow boxes in Figure10. This design required the use of four-layer boards as the connections would not have been possible otherwise.

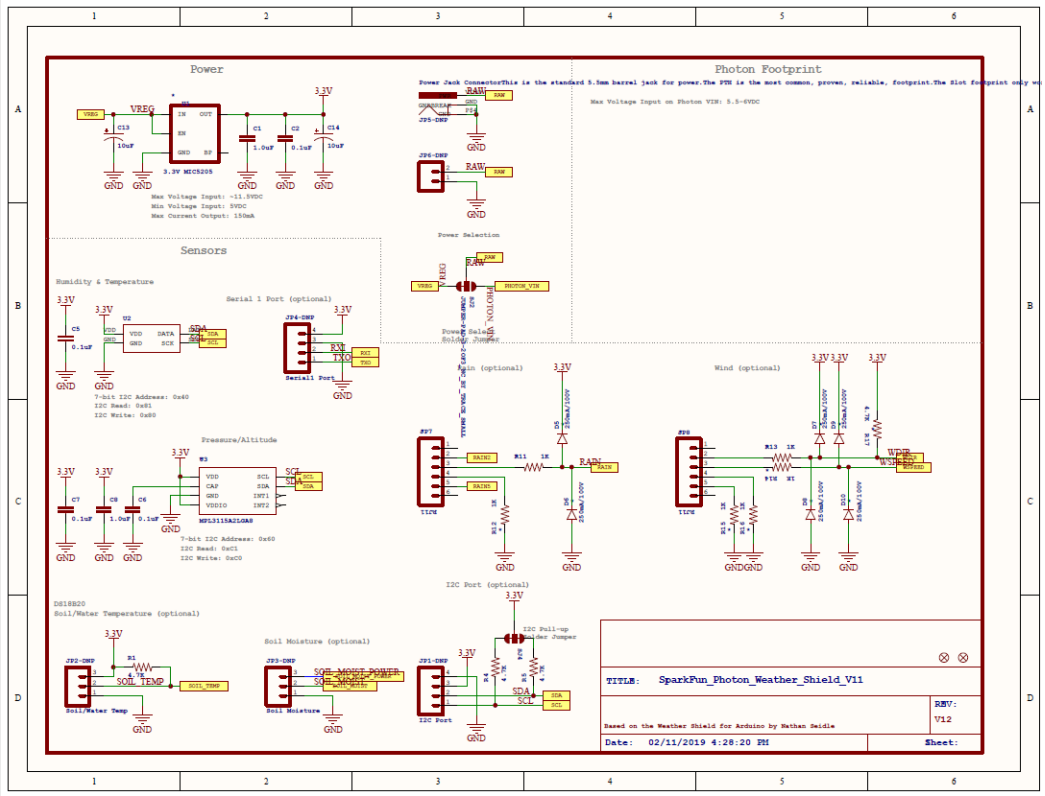

Figure 7. Schematic for 2nd Generation Weather Board A

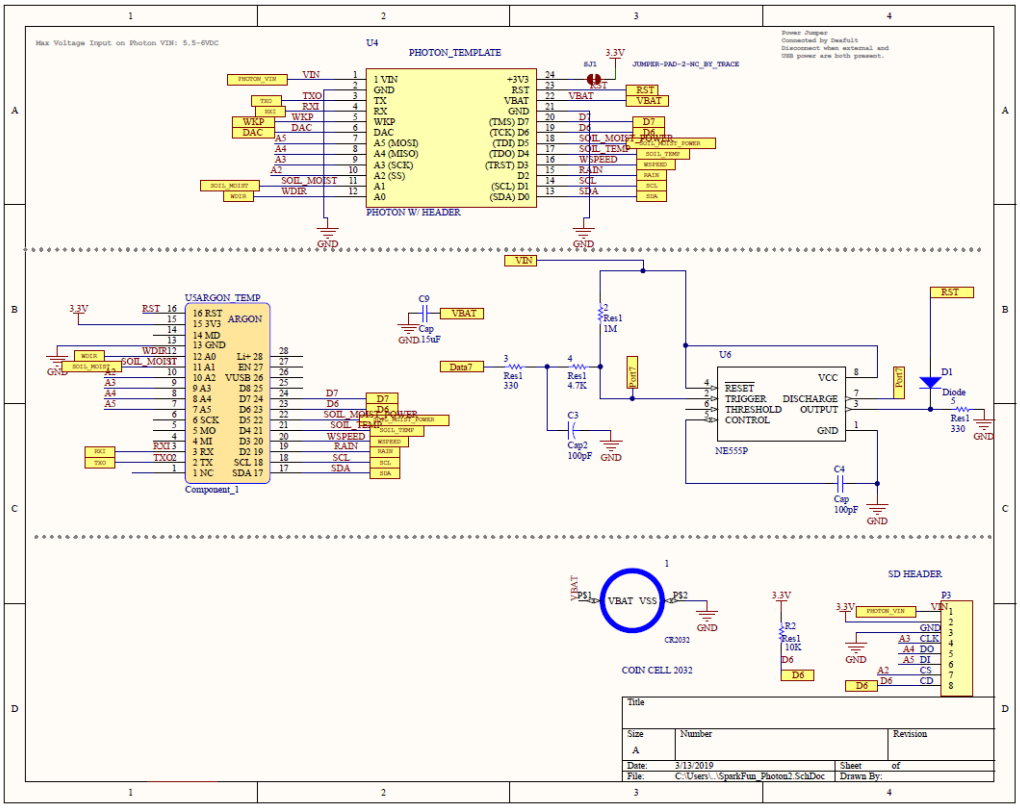

Figure 8. Schematic for 2nd Generation Weather Board B

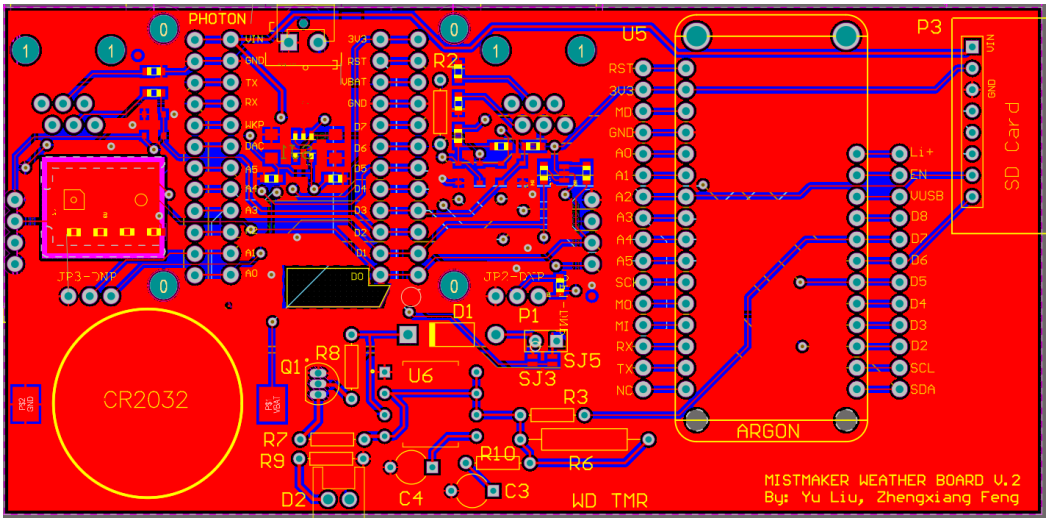

Figure 9. 2D Layout of 2nd Generation Weather Board

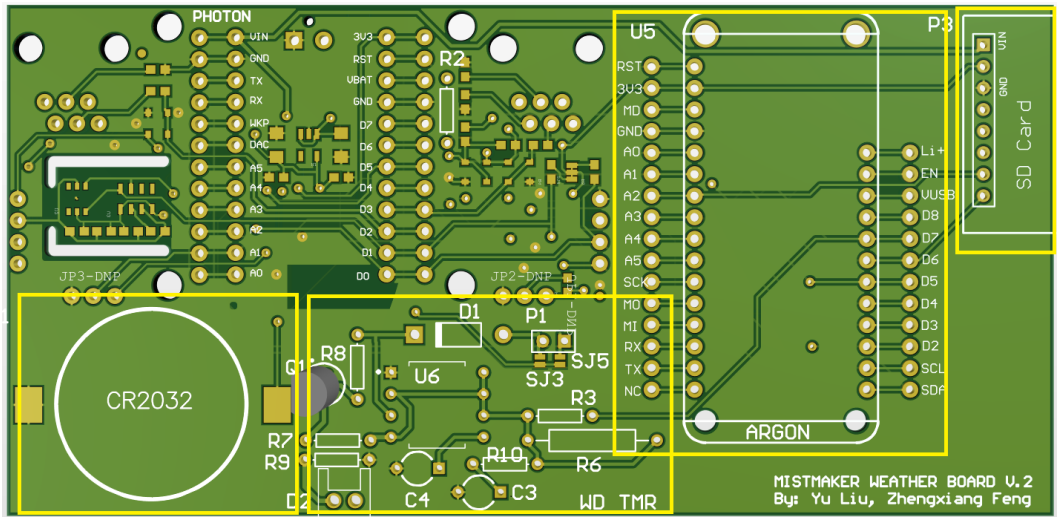

Figure 10. 3D Layout of 2nd Generation Weather Board

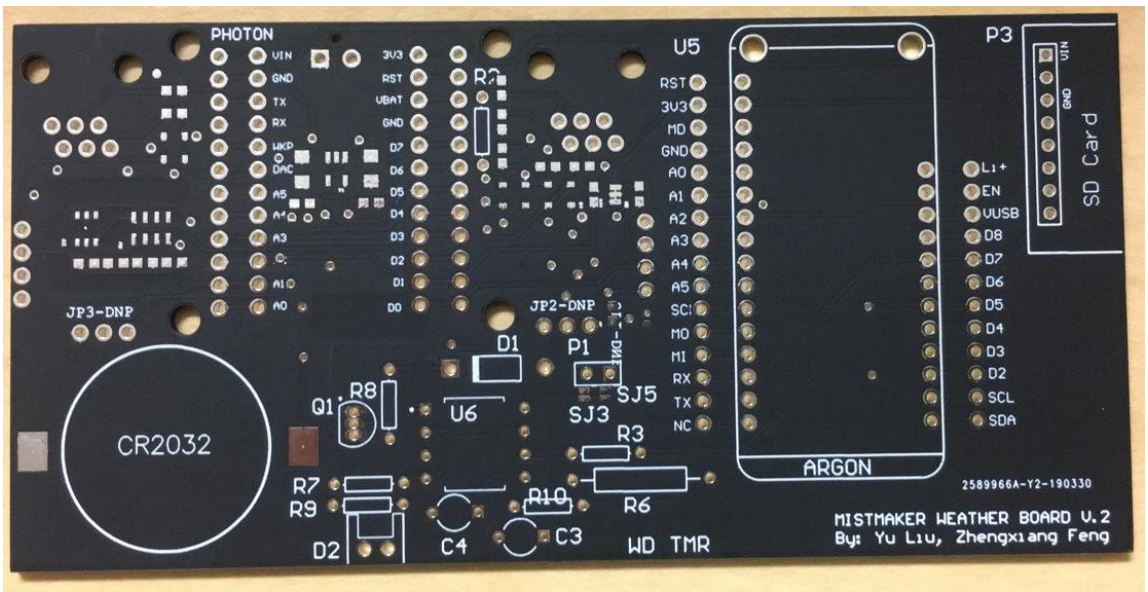

Figure 11. Physical Weather Board (Unsoldered)

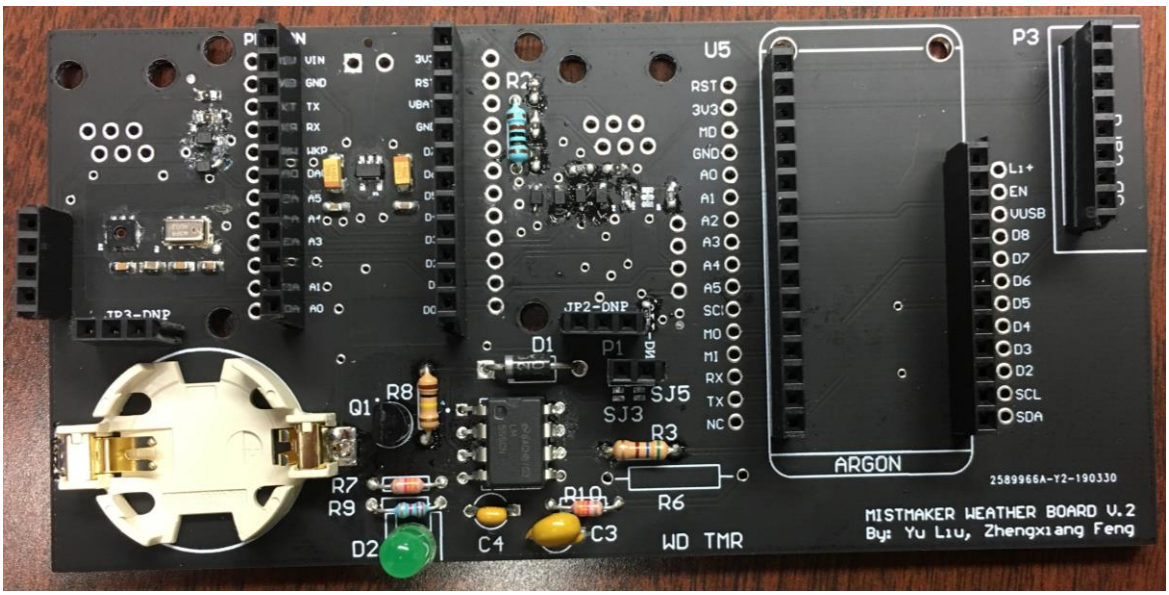

Figure 12. Physical Weather Board (Soldered)

The board was sent out for manufacturing and the parts were ordered and soldered on. The majority consists of SMD components such as resistors, capacitors, and diodes. The Si7021 Humidity sensor and MPL3115A2 Pressure Sensor were also ordered to provide the internal sensors needed to test the board I^2C interface.

Once all the components were soldered on, testing commenced with first ensuring the sensors worked with the Photon. Initial testing ran into issues as both the humidity and pressure sensors

ran into issues of no data being read or returned. Further debugging showed that the internal grounds at the sensors were not properly connected to the rest of the ground of the board which caused its malfunction. Adding a wire that connects the ground from the sensor areas to the rest of the board ensured its workable functionality. The board data was read and is displayed in Figure 13 below.

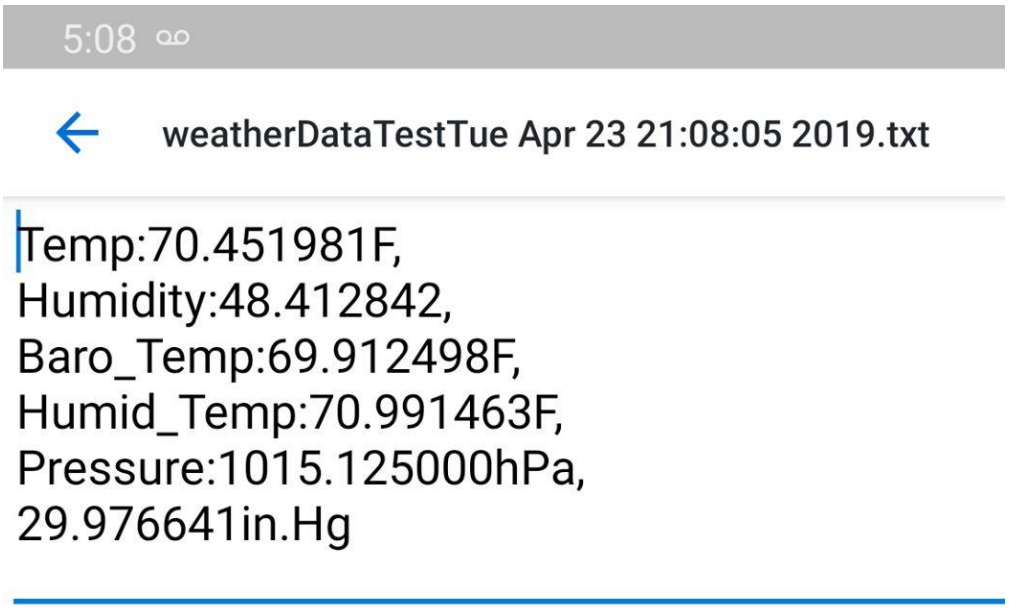

Figure 13. Weather Data Reported

Further testing included ensuring the Argon and Xenon would produce the same data. Taking out the Photon, the Argon was placed in its Featherwing footprint and the weather program was uploaded onto it. It produced the same result. The SD header also was tested and verified. The only issue that was encountered and still being looked into is the hardware watchdog timer. The watchdog needs a minimum supply voltage of 4.5V and the board only utilizes 3.3V. Current solutions are being looked into in order to provide a simple fix to ensure the full operation of the board.

Discussion

The next objectives are to verify the functionality of the second-generation boards with the watchdog as well as have the power board integrated with the watchdog. A complete board including the weather board, Adafruit SD header, watchdog and power board is something that can be developed for the third generation. Developing the board is the first step to ensuring a more modular and robust design. Progress is also delayed to the lack of resources by Particle in

introducing the Argon and Xenon which can serve very important roles in the future of IoT sensors. Lastly, further research needs to be performed to develop a better solution to the power of the weather station. In the event of absence from sunlight for over a week, the weather station and its real time monitoring becomes jeopardized by its lack of power. Further developments in creating more robust sensors made out of more durable material increases the value of the weather station, allowing it to provide more accurate data in events of hurricanes or more intense natural disasters.

Conclusion

The objective is to create a low-cost, robust, and modular Internet of Things (IoT) weather station that can serve as a solution for 3rd world countries like Haiti, where they do not have the necessary weather/climate data that can help support future agricultural growth, provide weather pattern data for public safety and infrastructure. Current IoT weather station can be seen in the graphic in Figure 5. IoT weather stations have the biggest impact in 3rd world countries with the potential to double a country's agricultural production and increase economic value. IoT sensors are cheap and can be quickly replaced. Once the final weather station has been completed and tested, a group of technicians will be trained to monitor and replace parts on weather stations in the event that it gets damaged or malfunctions due to old parts or unforeseen circumstances. The goal is to provide a blueprint for cheap IoT weather stations for future generations and decrease barriers due to expensive technological obstacles. Third world countries are underrepresented and do not have good control of what their weather is and therefore do not have the knowledge to choose the best crops for the type of soil and rainfall that their environment provides. Using low cost IoT sensors, it will enable third world countries to understand their climate and create the most impact in their country.

References

[1] Mestre G, Ruano A, Duarte H, Silva S, Khosravani H, Pesteh S, Ferreira PM, Horta R. An Intelligent Weather Station. Sensors. 2015; 15(12):31005-31022

[2] Sabatini F. (2017) Setting up and Managing Automatic Weather Stations for Remote Sites Monitoring: From Niger to Nepal. In: Tiepolo M., Pezzoli A., Tarchiani V. (eds) Renewing Local Planning to Face Climate Change in the Tropics. Green Energy and Technology. Springer, Chamdoi: 10.1007/978-3-319-59096-7_2

[3] Sparkfun. Sparkfun Sunny Buddy - Mppt Solar Charger. https://www.sparkfun.com/products/12885

[4] Sparkfun. Sparkfun Photon Weather Shield. https://www.sparkfun.com/products/13630

[5] World Meteorological Organization. (2010). Why investing in the rebuilding of the National Meteorological Service of Haiti—2010.