Internet of Things 20 (2022) 100628

Contents lists available at ScienceDirect

Internet of Things

journal homepage: www.sciencedirect.com/journal/internet-of-things

# Modeling indoor $PM_{2.5}$ using Adaptive Dynamic Fuzzy Inference System Tree (ADFIST) on Internet of Things-based sensor network data

Jagriti Saini [a,*], Maitreyee Dutta [a], Gonçalo Marques [b]

[a] National Institute of Technical Teacher's Training and Research, Chandigarh, 160019, India
[b] Polytechnic of Coimbra, ESTGOH, Rua General Santos Costa Oliveira do Hospital, 3400-124, Portugal

ARTICLE INFO

*Keywords:*
Indoor air quality
Pollution
Monitoring
Assessment
Fuzzy inference systems
Public health

ABSTRACT

Indoor air pollution is crucial for the building environment as it has a direct impact on human health, prosperity, comfort, and productivity levels. Repeated exposure to toxic materials and harmful chemicals leaves a considerable impact on occupant well-being. The degraded air quality in the indoor environment is closely connected to the rising cases of respiratory health issues, cardiovascular disease, lung cancer, and a wide spectrum of symptoms. Therefore, it is required to design a reliable system to assess indoor air quality (IAQ) in residential and commercial spaces to improve the health outcomes and productivity levels of the building occupants. The main contribution of this paper is to provide a rigorous design and development approach for the IAQ monitoring system using the Internet of Things-based sensor network. Furthermore, a forecasting model was designed using Adaptive Dynamic Fuzzy Inference System Tree to predict $PM_{2.5}$ conditions in the target building environment. The performance of the proposed system is tested over multiple datasets obtained from different rural and urban locations; moreover, the findings are further validated against benchmark datasets. The updates about real-time IAQ conditions in the target building environment were made accessible to occupants via an online web portal, and the entire system was named "Vayuveda" – an approach for enhanced air quality in the living spaces. The authors tested multiple methods at every step of the development process and compared performance at each stage to come out with the best model for real-time IAQ assessment.

## 1. Introduction

Air quality in the building environment has been a matter of significant interest for communities over several decades due to its major impact on public health and well-being [1]. Consistent evidence shows that indoor air pollution (IAP) increases the risk factor for acute respiratory infections and obstructive pulmonary disease by a considerable level [2, 3]. As per the report published by the World Health Organization (WHO) in the year 2002, IAP was responsible for causing 2.7% of the global burden of disease among children [4]. There is a variety of pollutants that influence air quality in the indoor environment, such as particulate matter, carbon dioxide, carbon monoxide, ozone, nitrogen dioxide, volatile organic compounds, light, temperature, and humidity as well [5, 6]. The rising

* Corresponding author at: Electronics and Communication Engineering, National Institute of Technical Teacher's Training and Research Chandigarh, Chandigarh, India.

*E-mail addresses:* jagritis1327@gmail.com (J. Saini), d_maitreyee@yahoo.co.in (M. Dutta), goncalosantosmarques@gmail.com (G. Marques).

https://doi.org/10.1016/j.iot.2022.100628

Available online 14 October 2022
2542-6605/© 2022 Elsevier B.V. All rights reserved.

concentrations of these hazardous pollutants and thermal comfort parameters cause fatigue, dizziness, cardiovascular disease, and respiratory health issues [2, 3].

More than half of the global population and approximately 95% of people in low and middle-income countries rely on solid fuels such as wood, dung, and agricultural residues to meet their daily energy requirements [7]. As women, young children, elderly and disabled people spend more time indoors while being engaged in cooking activities; they are critically affected by hazardous pollutant concentration levels [8, 9]. Scientific reports even indicate biomass or solid fuels as the second most hazardous cause of degraded health conditions after waterborne disease [10]. In India itself, approximately half a million children and women die every year due to adverse exposure to IAP [11]. Scientists from the US and Canada observed that repeated exposure to $PM_{2.5}$ pollutants not only increases cases of cardiopulmonary problems but lung cancer-related mortality as well [12]. $PM_{2.5}$ is also responsible for inducing an inflammatory response, mutagenicity/genotoxicity, and intracellular oxidative stress [13]. As per the stats obtained from Europe, the annual burden of disease due to IAQ, including contributions of polluted outdoor air transferred during ventilation procedures, leads to the loss of 2 million life-years [14]. The European Environment Agency (EEA) reported that almost 90% of citizens in Europe live in areas where $PM_{2.5}$-related guidelines for air quality are not met [14]. Therefore, it is important to work on monitoring and assessment of IAQ levels to ensure healthy living conditions in the building environment. The main research question considered for this experimental work is to explore if it is possible to create an integrated IoT system with a Fuzzy approach that monitors and analyses data in real-time. And the study also focuses on performance comparison of other AI methods with the proposed one.

### 1.1. Related work

Several researchers in the past have made efforts to address the challenges associated with critical consequences of degraded IAQ levels [15, 16]. Emerging technologies such as the Internet of Things (IoT), Artificial Intelligence (AI), Machine Learning (ML), Deep Learning (DL), Fuzzy Logic (FL), and Big Data Analysis show great potential to monitor and control the changing pollutant concentrations with the timely intervention [17–19]. Field experts have developed a variety of sensor modules to support real-time monitoring activities; however, researchers need to identify the most reliable and calibrated units to make measurements [20, 21]. The field data monitoring systems can be further integrated with the forecasting models to provide a timely estimation of changing pollutant concentration levels. Such smart IAQ assessment models can provide better health outcomes while helping building occupants to make efficient decisions to mitigate the adverse effects of degraded pollutant concentration levels.

Recent works related to IAQ assessment provide insights into the effective use of emerging technologies to address potential concerns in the field. The paper published by Lin et al. [22] is based on a neuro-fuzzy modeling approach for IAP forecasting. The main advantage of the proposed system in this study was the effective use of fuzzy elements that can handle uncertainty in training data distribution. The authors also utilized optimization algorithms to improve the learning efficiency of the proposed fuzzy model. Ahn et al. [17] designed a sensor microchip to measure atmospheric changes in the target environment, and the conditions were further forecasted using DL-based models. Furthermore, Espinosa et al. [23] compared the performance of different forecasting models such as long-short term memory (LSTM), gated recurrent unit (GRU), 1-dimensional – convolution neural network (1D-CNN), Lasso Regression, Random Forest (RF), and Support Vector Machine regression models to assess air quality conditions ahead of time. Du et al. [24] designed a hybrid deep learning framework for forecasting IAQ conditions. The authors used 1D-CNNs for extraction of spatial correlation and local trend features; however, a Bi-directional LSTM network was preferred for learning spatial-temporal dependencies in data. Several authors in the past tested the performance of fuzzy systems on IAQ assessment and provided a variable range of findings depending upon target parameters and evaluation metrics [25–27]. However, few others worked on AI and evolutionary algorithms to forecast IAQ conditions [28–31]. In a similar manner, the authors analyzed several studies available in the literature to identify potential gaps in the domain. The relevant findings were published in comprehensive and systematic review papers [32, 33]. The existing studies suggest that fuzzy systems have the ability to handle uncertainties in environmental data; however, optimization algorithms can further enhance system performance by making automated adjustments for different parameters [25]. Furthermore, existing researchers have also used Fuzzy based methods in other domains of research and they present reliable outcomes; such as Bozanic et al. [34] used neuro-fuzzy systems as a support to decision-making processes and Precup et al. [35] used model-based fuzzy control results for managing networked control systems. This motivation from literature helped the authors in this paper to work on two main aspects of IAQ management in the building premises. In the first step, the IoT-based sensor network was designed to monitor potential pollutant concentrations within the target building environment. In the second phase, a fuzzy systems-based forecasting model was designed to estimate $PM_{2.5}$ conditions. The authors worked on different optimization and feature analysis techniques at different stages to obtain the most reliable outcomes.

The main aim of this paper is to present a reliable approach to designing a web-based IAQ assessment system with the integration of emerging approaches such as IoT, Fuzzy Inference Systems (FIS), and optimization techniques. The authors of this study focused on six important IAQ parameters, including $PM_{2.5}$, $PM_{10}$, $CO_2$, CO, $NO_2$, and tVOC, along with two thermal comfort parameters, temperature and humidity. The real-time field measurements were done using factory-calibrated sensor units, and the data was transferred to a cloud system via IoT based hardware module. The monitoring system data was made available to the end-users via a web portal so that they can stay updated about ongoing changes in the pollutant concentration levels and can take relevant steps for ventilation when needed. The field data was further pre-processed to remove noise and missing samples. Furthermore, the input features were reorganised concerning the selected target variable using RF-based feature importance scores. The field data was sent to an Adaptive Dynamic Fuzzy Inference System Tree (ADFIST)– made up of a cascaded set of FIS modules with unique feature arrangements at input stages. The dynamic behavior of the proposed ADFIST model was achieved using a unique combination of features with respect to the target forecasting variable. Furthermore, the adaptive nature was developed using automated rule learning supported by a genetic

algorithm (GA). In the third stage, the trained model was further tuned using a pattern search (PS) algorithm to enhance the forecasting performance of the proposed model. The approach was further validated against benchmark datasets and existing studies in the literature. Authors in this study used primary performance indicators such as normalized root mean square error (NMSE), normalized root mean square error (NRMSE), mean absolute percentage error (MAPE), and coefficient of determination ($R^2$) to analyze system performance on test datasets obtained from different urban and rural sites. However, performance against the benchmark dataset was analyzed in terms of RMSE and mean absolute error (MAE). The field measurements and forecasting outcomes obtained from this experimental analysis were further displayed over an online portal named "Vayuveda," – which represents the complete approach to IAQ measurement and assessment on a real-time basis.

The remaining paper is structured as the second section provides experimental analysis for the development of a real-time monitoring system based on IoT technology while throwing light on the potential sensors and microcontroller units used in the hardware design. The third section provides insights into the methods used to design forecasting systems with ways to achieve enhanced computational efficiency and performance of the proposed model. The fourth section provides results and discussions based on different test datasets, benchmark datasets, and existing studies in the literature. The best model obtained after comparative analysis over multiple techniques was further utilized to provide instant forecasting updates on the website portal. Finally, the fifth section provides concluding statements along with future scopes of this study.

## 2. Experimental analysis

The pollutant concentration levels in the building environment are affected by several lifestyle activities. In urban areas, the IAQ levels are influenced by building materials, repeated use of chemical-rich cleaning products, cosmetics, poor ventilation arrangements, and heating and cooling systems. However, in rural homes, the main source of pollution is the combustion of biomass fuels such as wood, cow dung, and kerosene. Therefore, it is important to design a monitoring system that can be useful for both types of living and workspaces. In order to analyze the IAQ conditions of both urban and rural buildings, the authors selected four different sites for real-time data collection. The two urban sites included an institute library area and a 1 BHK apartment from Chandigarh city of India. However, the two rural sites were selected from a small village in Himachal Pradesh. The first site was the kitchen area of a home where residents used traditional cooking and heating practices on a regular basis, and the second was a cafeteria where a traditional heating furnace was consistently used to prepare food and sweets. After careful selection of these sites, necessary arrangements for monitoring system installation were made, including internet and electricity. The Google Map-based locations for both these sites are provided in Fig. 1.

The next task was to make a selection for the potential IAQ parameters to be monitored from the target location. In order to select the most influential pollutants, the authors performed a literature survey, collected information about the lifestyle and routine habits of building residents, and took advice from the experts at the local pollution control board. Ultimately, six important IAQ pollutants were selected for the study, including $PM_{2.5}$, $PM_{10}$, $CO_2$, CO, $NO_2$, and tVOC. Along with these, two important thermal comfort parameters (temperature and humidity) were selected as they play an important role in IAQ conditions and human health within the building environment. Detailed information on the development of the hardware monitoring system is provided in the subsections below.

### 2.1. Monitoring system design

The proposed IAQ monitoring system was designed using IoT based sensor network. The authors used the SDS011 sensor for

**Fig. 1.** Google Map locations for field monitoring sites.

measuring $PM_{2.5}$ and $PM_{10}$ parameters, and the CCS811 sensor was used for measuring tVOC and $CO_2$. A multigas groove sensor was used for measuring CO and $NO_2$ parameters from the target sites. Other than that, the DHT11 sensor was utilized for measuring humidity and temperature. The manufacturer specifications for all sensor units are provided in Table 1. As per information available in sensor datasheets, DHT11 sensor has a relative error of ±5%RH & ±2°C; and SDS011 sensor has a relative error of ± 15% & ±10μg/m3. However, relative errors of the remaining two sensors used in the system were not specified in the manufacturer datasheets. The authors used the Arduino Uno microcontroller to collect real-time sensor data from the field environment. Furthermore, the ESP8266 module was added to the system for transferring sensor data to the centralized online platform. The data in the first stage was collected on the ThingSpeak open-source platform, and then it was further made available on a dedicated web portal online.

One of the most important aspects of designing a real-time monitoring system for IAQ conditions is sensor calibration. The authors in this study preferred using factory-calibrated sensor units to ensure the most accurate readings. However, some reliability tests were also conducted before installing sensor units in the target environment. DHT11 sensor was tested in the laboratory environment against a standard measuring instrument (Honeywell TM00X); however, manufacturer-specific procedures were followed to ensure stable performance of the remaining three sensor units. The hardware monitoring system was set to send data updates to the online platform after every five minutes. The general architecture of the IoT-based hardware module is provided in Fig. 2(a) and the connection diagram is provided in Fig. 2(b).

As shown in Fig. 2(b); the ESP8266 module has been used to establish communication between hardware system and cloud data storage. This Wi-Fi microchip works with IEEE 802.11 b/g/n standards and WPA/WPA2 security protocols. Arduino Uno collects data from all sensors with the dedicated pin configuration and with added delays in the read cycle. This information is further sent to the ThingSpeak platform via serial communication channel established with ESP8266. This communication module incorporates integrated Wi-Fi abilities and is mutually used for communication and data processing in the IoT sensor network.

The data from urban site 1 and urban site 2 was collected for the duration of 8 months and 4 months, respectively. Similarly, data from rural site 1 and site 2 was collected for a duration of 6 months and 4 months, respectively. The authors further worked on the forecasting of potential IAQ parameters to help building occupants stay aware of sudden onsets of pollutant concentration levels. This paper focuses on the forecasting of $PM_{2.5}$ parameters using a combination of feature assessment, forecasting, and model optimization algorithms.

## 3. Methods

The rising pollutant concentration levels in the building environments have become a threat to occupant health and well-being. Government agencies and public health experts are looking for reliable options to assess IAQ conditions on a real-time basis so that building occupants can stay informed about challenges [36, 37]. Emerging technologies in this field can ensure promising solutions for forecasting IAQ conditions in advance. This section provides information about the development of a forecasting system using the fuzzy logic approach in combination with a GA and PS optimization. The main reason to choose the fuzzy approach for this system design is the ability of fuzzy algorithms to handle uncertainties and fuzziness in environmental data. However, in order to design the forecasting model, it is first important to pre-process field data using relevant methods.

### *3.1. Data pre-processing*

The real-time data gathered in the ThingSpeak channel for all four sites was exported in the form of an Excel file for further processing. As urban and rural sites had different variations in data, therefore, authors decided to use a combination of data from urban and rural sites to train the forecasting model. Therefore, data from urban site 1 and rural site 1 were combined to create training data, and data from urban site 2 and rural site 2 was used as test data separately. Similarly, the authors used the Beijing air quality dataset (2013-2017) from 3 different sites for model performance validation purposes [38]. This benchmark dataset originally contains data from 12 different cities of Beijing with parameters $PM_{2.5}$, $PM_{10}$, $SO_2$, $NO_2$, CO, $O_3$, temperature, and pressure. However, for validation purposes, data from only three cities (Dongsi, Shunyi, and Wanliu) was considered. This sub-section provides data pre-processing information with the training dataset only; however, a similar approach was followed for the remaining test and validation datasets as well.

The training data obtained from the field sensor network had a total of 68,720 samples from the field environment with a sampling time of five minutes. However, due to hardware system failures, electricity cut-offs, and maintenance issues, several missing data points were reported. In the first phase, the authors analyzed field data using boxplots, and it was observed that several data points lay outside lower and upper quartile ranges [39]. The outliers lying beyond the outer fences of the boxplot were required to be eliminated to reduce variability in data. As per the recommendation of the existing researchers in the literature, the authors used the Interquartile

**Table 1**
Manufacturer specifications for used sensors.

| Sensor Name | Manufacturer | Measuring Parameter | Operating Range | Cost/Unit (US$) |
|---|---|---|---|---|
| SDS011 | Nova Fitness | $PM_{2.5}$, $PM_{10}$ | 0.0–999.9 μg/m3 | $31.70 |
| CCS811 | SparkFun | $CO_2$, tVOC | 0–1187 ppb; 400–8192 ppm | $24.28 |
| Multigas Sensor | Seed Studio | $NO_2$, CO | 0.05-10ppm; 1-1000ppm | $12.82 |
| DHT11 | Aosong MPN | Temperature, Humidity | 0 °C to 50 °C; 20% to 90% | $1.35 |

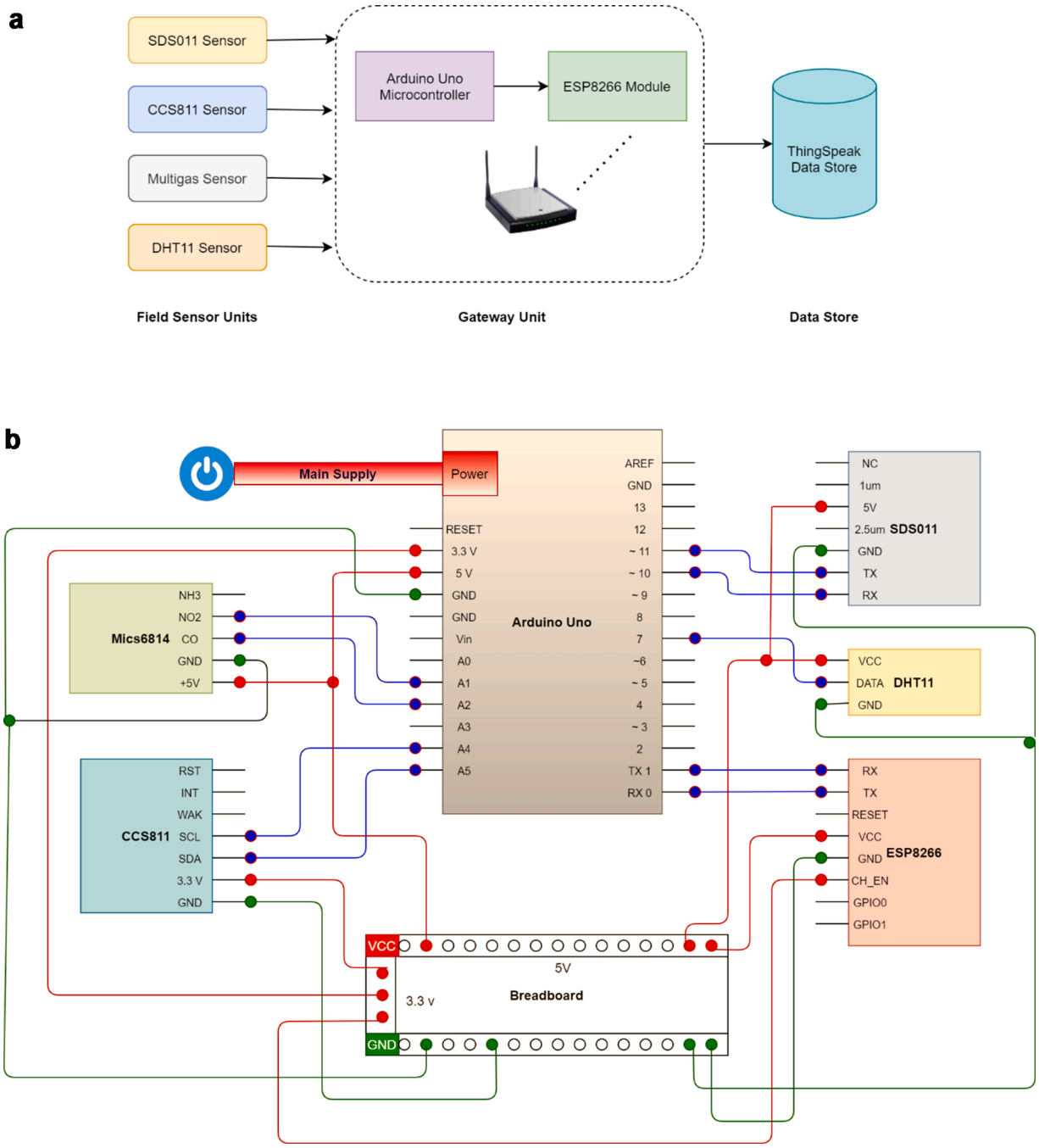


**Fig. 2.** (a) General architecture of IoT-based hardware monitoring system.
Fig 2(b): Connection diagram of Arduino and sensors used for IAQ monitoring.

range method to get rid of outliers in field data [40]. The formula for the quartile range is provided in Eq. 1 where Q1 represents a lower 25% cut-off for data, Q3 represents a higher 25% cut-off, and IQR is the intermediate (desired) range.

$$IQR = Q3 - -Q1 \tag{1}$$

After the removal of outliers from training data, the remaining samples were processed further to check the presence of missing values. The dataset reported 18% missing values, and the authors used the mean imputation method as per the recommendation of existing researchers to remove missing values [41,42]. Furthermore, a standard averaging method was used to summarize the data readings with five minute sampling time from the field environment as proposed in [43]. After this step, the training dataset with 5476

samples was processed further for model training. The statistical information of pre-processed data is provided in Table 2.

After analyzing the statistical description of field data, the authors worked on feature arrangements using an RF-based feature importance score as suggested by [44]. This feature re-organization was important for the forecasting approach used in the present study. The main idea behind this is to create an automated pipeline of input parameters with respect to the selected target variable. Although this paper focuses only on $PM_{2.5}$ parameter forecasting, authors have published other papers forecasting multiple parameters where feature re-arrangement played a valuable role [45, 46]. When $PM_{2.5}$ was selected as the target variable, the respective input feature importance scores were listed in Table 3.

As per the RF-based feature importance scores, the input parameters were reorganised in descending order. The feature with the lowest importance score was kept in the last position, and the feature with the highest importance score was brought to first place. Instead of using a manual arrangement for all features, the same process was followed for all test and validation datasets. Moreover, it can be used similarly when other IAQ parameters are selected as response variables. As forecasting decisions are greatly influenced by pollutant concentration levels in the target indoor environment, these automatic feature organization methods can handle a large number of parameters with ease while promising enhanced accuracy of the model. The resulting features are further utilized for model training, testing, and validation. The detailed analysis is given in the sub-sections below.

### 3.2. Adaptive dynamic fuzzy inference system tree

The forecasting model in this study was designed using FIS, GA, and PS algorithm. The main advantage of fuzzy logic is that this concept is influenced by human reasoning. Moreover, the degree of belongingness of the object, in this case, is measured in proportions. There are generally four important elements of the fuzzy system architecture, including fuzzification, inference engine, knowledge base, and defuzzification [47]. The first step is used to convert crisp inputs from the field environment into fuzzy values. The inference engine decides the degree of match between the knowledge base and fuzzy inputs. Rule or knowledge base plays the most important role in this decision-making process, and it is made up of some if-then statements as per field conditions or expert knowledge. Finally, the defuzzification method is applied to convert fuzzy sets into crisp values so that they can be used again in real-life environments.

The basic fuzzy logic system is desired to possess an $m^n$ number of rules where m indicates a number of membership functions per input feature and n represents a total number of inputs [48]. In the present study, there is a total of seven input features and one output variable. As per the recommendations seen in the literature, the authors decided to use five membership functions for each input to depict different pollutant concentration levels as Good, Moderate, Poor, Unhealthy, and Hazardous [49]. Considering this arrangement, the basic fuzzy system may require $5^{(7)} = 78{,}125$ rules to accommodate all inputs efficiently. However, such a structure will become computationally very expensive with increased complexity levels. Realizing such models for practical environments will be another challenge. Therefore, the authors decided to go ahead with the hierarchical structure of FIS to design a cost-effective and computationally faster model for forecasting IAQ variables. When fuzzy blocks are arranged in a cascaded pattern, they require $km^n$ number of rules where k represents a total number of FIS blocks used in model design, m represents a number of membership functions assigned to each input variable, and n represents the number of input variables [48]. The cascaded structure used in this system design processed only two parameters per FIS block; therefore, it used a total of 6 FIS modules to accommodate all 7 inputs and to generate final forecasting outcomes accordingly. As a result, the tree structure needs only $6 \times 5^{(2)} = 150$ rules only. Moreover, the input arrangement at each stage is influenced by the RF-based feature arrangement that is described in the previous sub-section. Therefore, features with the highest importance score were applied at the first level of the hierarchical structure, and features with the lowest score were accordingly moved to the last stage of the structure. In this way, a DFIST structure was designed. It was called dynamic due to its ability to process inputs at each stage automatically with reference to the selected target variable. The structure of DFIST for $PM_{2.5}$ forecasting is provided in Fig. 3.

The structure shown in Fig. 3 makes use of Mamdani FIS modules, and the fuzzification process here is done with the help of triangular membership functions for simplicity and enhanced computational efficiency [50, 51]. The mathematical expression for the triangular membership function is given in Eq. 2, which helps to convert real-valued parameters into fuzzy values between 0 and 1 [52].

$$\mu(x;\ a,\ b,\ c) = \max\left\{\min\left\{\frac{x-a}{b-a}, \frac{c-x}{c-b}\right\},\ 0\right\} \tag{2}$$

**Table 2**
Statistical information of pre-processed training data.

| Statistical Descriptor | $PM_{2.5}$ | $PM_{10}$ | CO | $CO_2$ | $NO_2$ | tVOC | Temp | Hum |
|---|---|---|---|---|---|---|---|---|
| **Count** | 5476 | 5476 | 5476 | 5476 | 5476 | 5476 | 5476 | 5476 |
| **Mean** | 24.952 | 108.616 | 108.616 | 1028.018 | 105.183 | 202.545 | 27.314 | 66.363 |
| **Min** | 1.340 | 2.250 | 0.00 | 0.00 | 0.00 | 400.00 | 11.980 | 18.000 |
| **Max** | 119.200 | 178.400 | 525.000 | 2426.000 | 513.000 | 1628.00 | 33.218 | 95.000 |
| **Std** | 17.200 | 23.772 | 97.337 | 544.407 | 81.379 | 330.362 | 4.819 | 18.776 |
| **Variance** | 295.80 | 565.025 | 9472.798 | 296324.8 | 6621.466 | 109119.6 | 23.218 | 352.506 |
| **Kurtosis** | 10.562 | 7.857 | 6.138 | -0.3326 | 3.7086 | 5.243 | 0.745 | -0.9813 |
| **Skewness** | 2.9785 | 2.600 | 2.594 | 0.97144 | 2.0920 | 2.4222 | -1.344 | -0.186 |
| **Coefficient of Variation** | 1.0131 | 0.9526 | 0.8960 | 0.5295 | 0.7736 | 1.6309 | 0.1764 | 0.2829 |

**Table 3**
Input feature importance scores when $PM_{2.5}$ is considered as target variable.

| Response Variable | $PM_{10}$ | $CO_2$ | CO | $NO_2$ | $CO_2$ | tVOC | Temp | Hum |
|---|---|---|---|---|---|---|---|---|
| **$PM_{2.5}$** | 0.94372 | 0.00121 | 0.00068 | 0.00139 | 0.00120 | 0.00200 | 0.04979 | 0.00121 |

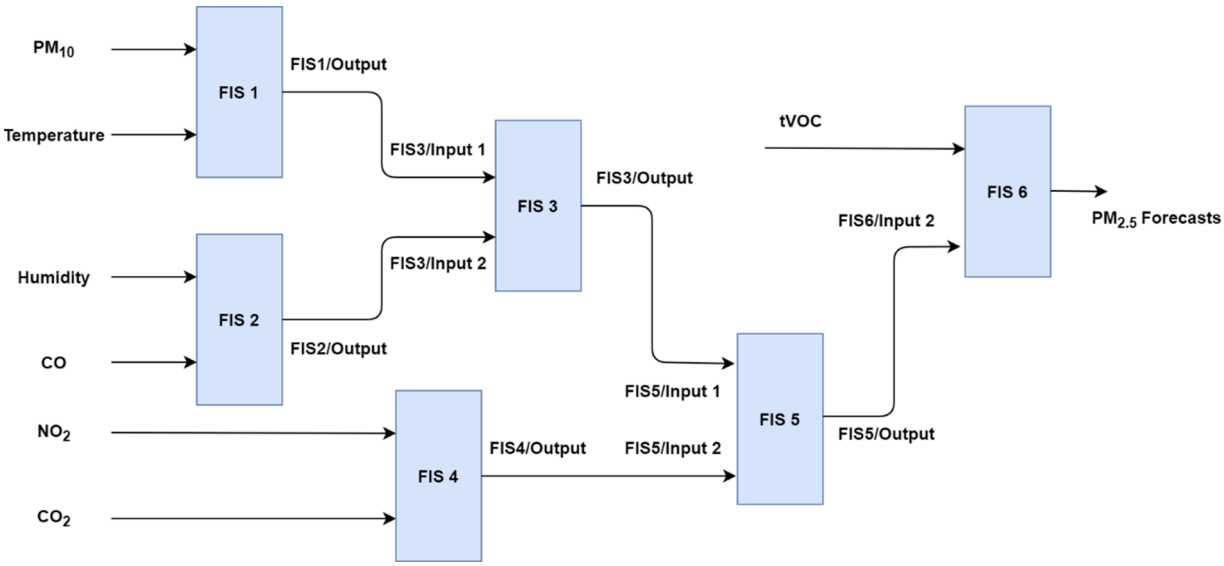


**Fig. 3.** Structure of DFIST for PM2.5 prediction.

In this equation, a, b, and c represent parameter ranges assigned via membership functions, whereas x defines input pollutant concentrations. The reasoning process is further implemented by using specific OR (union or max) and AND (intersection or min) operators. The mathematical expressions to represent these operations are given in Eqs. 3 and 4, respectively [25]. In this equation, $\mu_A(x)$, defines the degree by which x belongs to A; whereas $\mu_B(x)$ defines the degree of belongingness of x to B.

$$\mu_{A\cup B}(x) = \max\{\mu_A(x),\ \mu_B(x)\} \tag{3}$$

$$\mu_{A\cap B}(x) = \min\ \{\mu_A(x),\ \mu_B(x)\} \tag{4}$$

The performance of FIS models is greatly dependent on the knowledge or rule base. In order to ensure the best outcomes, it is first important to consider all IAQ scenarios that affect human health in the building environment. However, instead of designing the rule base manually, the authors in this study applied GA optimization to avoid human errors. The use of GA to construct rules for the

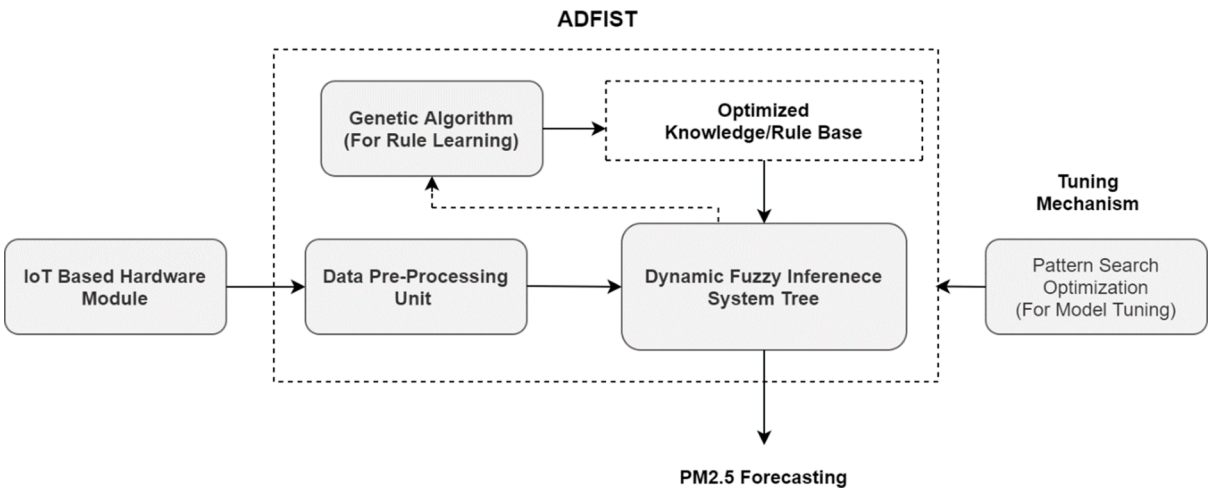


**Fig. 4.** General block diagram of proposed ADFIST system.

proposed hierarchical structure further result in Adaptive DFIST (ADFIST). In this case, the word adaptive represents the adaptive rule learning behavior of the forecasting model with respect to the selected combination of input features and the target variable. The general block diagram of the proposed ADFIST system with a tuning mechanism is provided in Fig. 4. The ADFIST system takes input from IoT based hardware module and provides forecasts for the selected response variable. The input features are pre-processed and re-arranged as per requirements of dynamic system design, and then an optimized knowledge base is generated using GA-based adaptive learning [53].

GA is inspired by biological behaviors, genetic mutations, and recombination with pre-defined criteria [54]. This evolutionary algorithm is widely used to find out most appropriate solutions for a wide range of applications. In order to automate the rule learning process for ADFIST, a set of chromosomes was first initialized as a representation of membership functions and a fuzzy rule set. Then a fitness value is assigned to every chromosome in the population, and the fittest ones are identified based on pre-defined probability conditions. The crossover and mutation process occurs in the population to generate new offspring. In the next phase, the fittest chromosomes from the new generation replace the worse ones from the initial population, and the system performance is tested. The process is repeated until the best set of fuzzy rules is generated for the unique combination of input features and response variable. The time to generate a complete rule base for the proposed hierarchical model depends upon the machine's execution speed, and it helps to save a lot of time and effort in comparison to manual rule formation. The main reason to use the adaptive system for rule generation is that this approach is scalable to any number of inputs and rules. Therefore, it appears to be a more reliable choice for the practical implementation of the IAQ forecasting system.

Furthermore, the proposed ADFIST system is tuned to achieve enhanced computational efficiency. As the authors are working on the development of a new approach that can accommodate a higher number of parameters with ease, it is important to find ways to eliminate redundancy in the network. The tuning process in FIST design can help to eliminate redundant blocks and connections while improving system performance and computational efficiency. In the current study, the authors used a PS algorithm to achieve desired outcomes. PS is a direct search-based optimization approach that explores the points close to the current point to identify the optimum solution in the search space [55]. It makes use of the existing information about the model while making efforts to further minimize the objective function. The authors analyzed the performance of the proposed ADFIST system before and after the tuning procedure and observed considerable improvement in the accuracy of forecasts. The results of the proposed ADFIST system with pattern search-based tuning are presented in Section 4.

## 4. Results and discussion

The hardware implementation and design methodology of the proposed ADFIST system for $PM_{2.5}$ forecasting has already been discussed in previous sections. The model was trained using a dataset obtained from IoT-based hardware monitoring systems that were installed at different rural and urban sites. The pre-processed data was further utilized in a specific RF-based feature arrangement for the training of the ADFIST model with respect to the target response variable ($PM_{2.5}$). The combination of inputs at different stages is presented in Table 4. As already discussed in the previous section (Fig. 3), the proposed ADFIST model makes use of a hierarchical structure to process input features where the output of FIS1 and FIS2 are given to FIS3; outputs of FIS3 and FIS4 are further used as input of FIS5. Furthermore, the output of FIS5 is used as the second input of FIS6. The model shows dynamic behavior for the processing of inputs as per the selected response variable and RF-based feature arrangements.

The FIS model performance is highly influenced by the knowledge base. However, it is usually a great challenge for researchers to develop the most accurate and effective rule base to achieve desired outcomes with the FIS model. In order to avoid human errors and negative impacts on the performance of the model, the authors in this study decided to use the GA-based optimization technique to automate the rule learning process. GA helped to identify the most effective rules for $PM_{2.5}$ forecasting while eliminating the least performing ones. The model works by generating a feasible number of solutions for the problem under consideration, and then they are updated at each step after careful evaluation. The crossover, mutation, and selection process helps to develop an effective and compact rule base using fitness values of initial populations. The model access all historical records of network performance and finally returns the rules that qualify for better forecasting accuracy. The number of rules generated at each stage of the ADFIST system for $PM_{2.5}$ forecasting is provided in Table 5. It can be observed that the system utilized only 138 rules in total, which can automatically help to reduce the computational complexity of the network in comparison to a single FIS system that requires 78,125 rules, as described in Section 3.

After the generation of the rule base, the authors used PS for tuning to improve forecasting outcomes by eliminating redundant information from the network. The performance of the ADFIST system before tuning and after tuning with the training and validation dataset is presented in Table 6. Furthermore, Fig. 5 provides $PM_{2.5}$ forecasting outcomes obtained from MATLAB in terms of NRMSE parameters. It shows considerable improvement in forecasting performance. The ADFIST model designed with the combination of RF, GA, and PS algorithms is further used with test datasets from both urban and rural sites. The performance in terms of primary performance indicators is provided in Table 6.

**Table 4**
Random Forest-based feature arrangement for DFIST input with $PM_{2.5}$ as the response variable.

| FIS1 | | FIS2 | | FIS4 | | FIS6 | Response Variable |
|---|---|---|---|---|---|---|---|
| **Input 1** | **Input 2** | **Input 1** | **Input 2** | **Input 1** | **Input 2** | **Input 1** | - |
| $PM_{10}$ | Temp | Hum | CO | $NO_2$ | $CO_2$ | tVOC | $PM_{2.5}$ |

**Table 5**
Number of rules at each stage for $PM_{2.5}$ forecasting with ADFIST model (RF+GA+PS).

| Number of Iterations (GA Rule Learning + PS Tuning) | Number of Rules at Different Stages of ADFIST. | | | | | | Total Number of Rules | Response Variable |
|---|---|---|---|---|---|---|---|---|
| - | FIS1 | FIS2 | FIS3 | FIS4 | FIS5 | FIS6 | - | - |
| 154+201 | 24 | 26 | 24 | 22 | 24 | 18 | 138 | $PM_{2.5}$ |

The tuned ADFIST model provides efficient performance for forecasting real-time IAQ conditions with NRMSE = 0.34465 on the training dataset and NRMSE = 0.37823 and 0.45678 on the test dataset from Urban Site 2 and Rural site 2, respectively. Furthermore, results on tests datasets show that the model presents balanced performance with different types of datasets instead of being biased with the specific type of data. Authors have also tested model performance with different combinations of feature arrangement approach, optimization, and tuning methods; the results are published in [45, 46]. However, this study is mainly based on the influence of RF, GA, and PS on ADFIST behavior. The combination of hierarchical approach and optimization algorithms provided a model with reduced computational complexity while ensuring reliable forecasting performance. However, the model has a limitation related to the time taken around 2 hours 37 minutes for training and 2 minutes 51 seconds for evaluation.

It is difficult to make a direct comparison of the experimental results with existing studies due to several factors such as differences in datasets and unique evaluation parameters. However, the authors tried to validate the model performance against the Beijing dataset (2013-2017). As already discussed in previous sections, this dataset contains air quality data from 12 different cities. However, the authors considered data from three cities for validation of the proposed model. The authors in [56] used the same dataset and tested the performance of multiple models for forecasting the $PM_{2.5}$ parameter. The first group of deep learning architectures used by existing authors included simple models without any CNN layers. The authors removed pooling, concatenation, convolution, and reshaping layers from the models. However, in the second group, they used models with CNN layers and then processed data via LSTM, GRU, ANN, RNN, and Bidirectional models. In this case, the existing authors used layers from CNN1 and input 1, but they ignored layers from CNN2 and input 2. Furthermore, group three included various hybrid models while utilizing CNN1, CNN2, Input 1, and Input 2 layers as well. The results of all models tested on the Beijing dataset from three selected cities are shown in Table 7. The last column contains results from the proposed model in this study, and a significant improvement over existing models was observed in terms of RMSE and MAE.

Among all existing models, the authors in [56] rated the CNN-LSTM combination as the most effective solution for $PM_{2.5}$ forecasting. However, the proposed ADFIST system with PS tuning presented an enhanced performance for data from all three cities under consideration.

The performance of the IAQ forecasting model is considerably influenced by the type of real-time IAQ monitoring system, pre-processing methods, and model parameters. Researchers in the past have worked on a variety of sensor units to do field measurements for IAP conditions; however, not all of those sensor units provided stable readings. The presence of outliers, missing values, and instability of sensor units is one of the major reasons behind inaccurate field measurements [39, 40, 42]. When such type of data is processed further, it can degrade the performance of the forecasting model due to high uncertainty. Therefore, authors need to make a very careful selection of hardware modules for real-time measurements. At the same time, it is important to be careful with the feature pre-processing methods. The authors have tested model performance with correlation-based input selection as well as RF-based feature arrangements, and the results are published in different papers. However, future researchers are also required to work on additional parameters for a more accurate and efficient assessment of IAQ conditions. The selection of the forecasting model and the relevant parameters must also be made carefully to achieve desired performance. The proposed methods must be practically implementable at a reasonable cost without compromising accuracy.

### *4.1. Web portal for field data*

The authors have also worked on providing real-time updates for field IAQ conditions to the building occupants. Therefore, they created a user-friendly interface where consistent updates on changing conditions of potential IAQ parameters can be presented. The authors used the ESP8266 module in association with the Arduino Uno microcontroller to achieve wireless transmission of field data. The system was connected to a dedicated Wi-Fi unit, and the data samples with a gap of five minutes were transmitted to the ThingSpeak platform. A dedicated channel was created for all four monitoring sites. ThingSpeak was selected for data collection because this platform is available as an open-source IoT data store and allows quick integration with the MATLAB platform to ensure easy analysis of field data. However, in order to provide continuous updates to the building occupants regarding IAQ conditions, the authors preferred designing a WordPress-based web portal. WordPress is a widely used Content Management System (CMS) that

**Table 6**
ADFIST $PM_{2.5}$ forecasting performance analysis using key performance indicators.

| Response Variable | Model | Type of Dataset | NRMSE | NMSE | MAPE | $R^2$ |
|---|---|---|---|---|---|---|
| $PM_{2.5}$ | ADFIST (RF+GA) | Training Data | 0.58858 | 0.3357 | 0.4927 | 0.6643 |
| $PM_{2.5}$ | ADFIST (RF + GA) with PS tuning | Training Data | 0.34465 | 0.2875 | 0.4825 | 0.7825 |
| $PM_{2.5}$ | ADFIST (RF + GA) with PS tuning | Test Data – Site 2 Urban | 0.37823 | 0.3267 | 0.4578 | 0.7187 |
| $PM_{2.5}$ | ADFIST (RF + GA) with PS tuning | Test Data – Site 2 Rural | 0.45678 | 0.4029 | 0.5963 | 0.7083 |

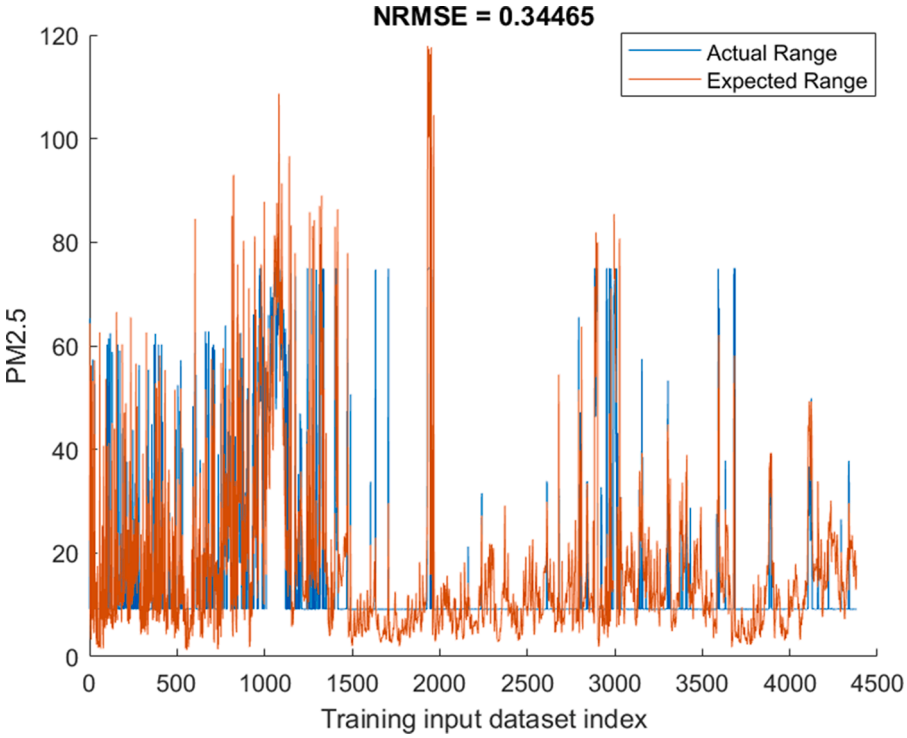


**Fig. 5.** $PM_{2.5}$ Forecasting results in terms of NRMSE with ADFIST (RF+GA+PS).

**Table 7**
Comparison of ADFIST forecasting performance for $PM_{2.5}$ parameter with various existing models used in [56].

| Type | Architecture/Model | Dongsi (RMSE) | Dongsi (MAE) | Shunyi (RMSE) | Shunyi (MAE) | Wanliu (RMSE) | Wanliu (MAE) |
|---|---|---|---|---|---|---|---|
| Group I | Bidirectional GRU | 21.290 | 13.051 | 18.764 | 10.124 | 17.138 | 9.658 |
| | Bidirectional LSTM | 20.806 | 11.710 | 19.299 | 10.461 | 17.335 | 9.765 |
| | Bidirectional RNN | 20.703 | 11.871 | 20.125 | 11.154 | 18.442 | 11.144 |
| | GRU | 22.143 | 12.505 | 20.914 | 11.977 | 19.267 | 11.183 |
| | LSTM | 19.775 | 10.670 | 21.143 | 11.829 | 17.946 | 10.523 |
| | RNN | 20.655 | 11.412 | 21.046 | 11.571 | 20.920 | 12.403 |
| Group II | CNN-Bidirectional GRU | 21.214 | 12.638 | 18.497 | 10.290 | 16.944 | 9.466 |
| | CNN-Bidirectional LSTM | 20.267 | 11.778 | 18.427 | 9.858 | 17.071 | 9.700 |
| | CNN-Bidirectional RNN | 19.514 | 10.274 | 20.697 | 12.417 | 16.962 | 9.683 |
| | CNN-GRU | 19.667 | 10.622 | 19.652 | 11.313 | 17.081 | 9.492 |
| | CNN-LSTM | 19.743 | 10.582 | 18.663 | 10.407 | 17.209 | 9.612 |
| | CNN-RNN | 20.021 | 11.311 | 18.686 | 9.961 | 17.018 | 9.615 |
| | CNN-ANN | 19.752 | 10.679 | 20.364 | 11.466 | 17.041 | 9.385 |
| Group III | CNN-Bidirectional GRU | 18.193 | 10.037 | 18.134 | 9.780 | 15.785 | 9.143 |
| | CNN-Bidirectional LSTM | 17.941 | 9.763 | 19.187 | 10.167 | 16.423 | 10.149 |
| | CNN-Bidirectional RNN | 19.658 | 11.354 | 18.068 | 9.709 | 15.154 | 8.527 |
| | CNN-GRU | 18.900 | 11.118 | 18.897 | 10.838 | 17.031 | 10.274 |
| | **CNN-LSTM** | **17.706** | **9.653** | **17.920** | **9.588** | **14.951** | **8.486** |
| | CNN-RNN | 18.135 | 10.106 | 20.215 | 12.817 | 15.981 | 9.543 |
| | CNN-ANN | 18.074 | 9.872 | 18.196 | 10.245 | 17.705 | 10.191 |
| Proposed Model | **ADFIST (RF+GA+PS)** | **14.672** | **8.526** | **15.677** | **7.521** | **12.981** | **6.987** |

permits easy portal design solutions with simple drag-and-drop features. The online web portal was named "Vayuveda" – which represents a system for easy monitoring of IAQ conditions in the building environment. The ThingSpeak APIs were integrated into this WordPress-based web portal, and data from all four sites was displayed to ensure easy access to end-users on the go. Fig. 6 shows a display of data on the web portal from Urban site 1.

The web portal also provides general information about the importance of IAQ assessment, and access to some supporting literature is also provided on the Vayuveda platform to help build occupants an easy understanding of IAQ management. However, the monitoring system design and field data assessment was only the first phase of this research work. The authors are further working on the integration of the forecasting system with an online portal so that end users can consult for complete information along with future

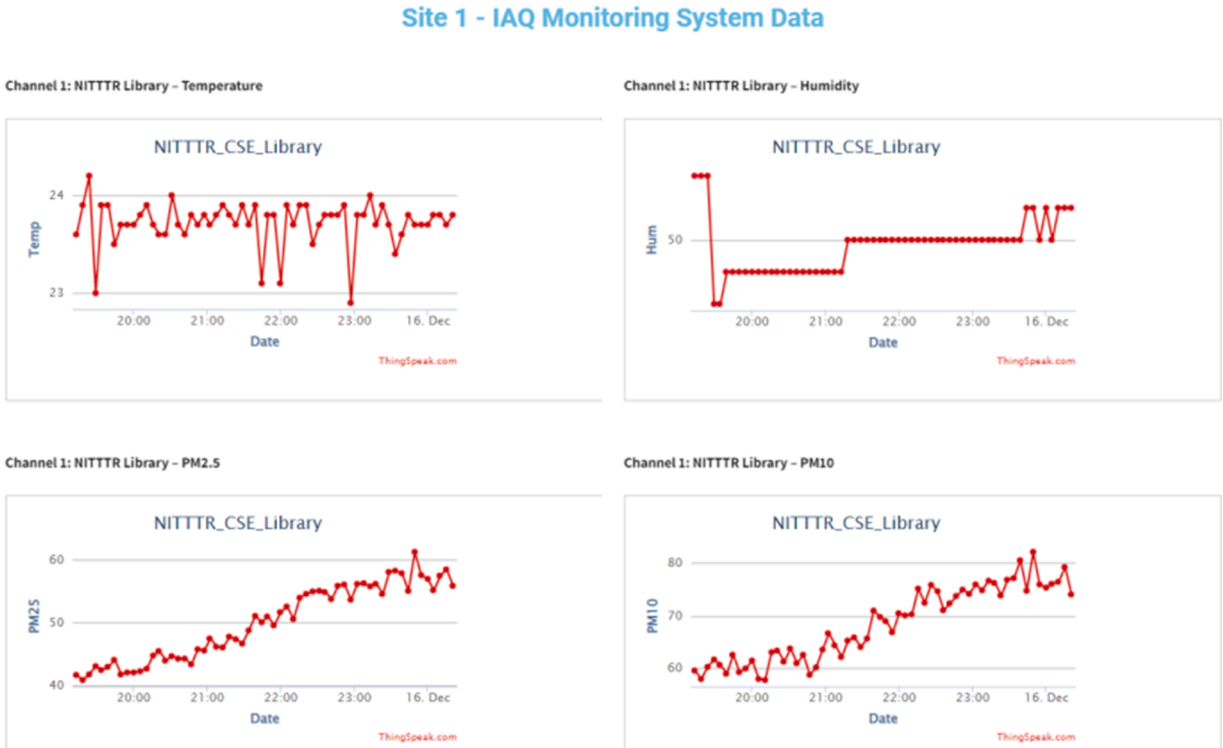


**Fig. 6.** Data from site 1 displayed on the web portal.

estimates related to IAQ conditions.

## 5. Conclusion

This paper presented a detailed analysis and design steps to create an IAQ assessment system with the unique integration of emerging technologies – IoT and AI. The IoT-based system is used to monitor real-time field data with eight important IAQ parameters, and this information is further stored on the online platform with a quick display to the end-users. The main novelty of this study is based on the development of an adaptive and dynamic fuzzy inference tree with a unique combination of RF score-based feature arrangement and GA for performance optimization. The optimized and tuned FIS model was used to forecast $PM_{2.5}$ conditions in the target environment. The authors monitored data from four different urban and rural sites to analyze IAQ conditions and to test the performance of the forecasting model on unique variations of field data inputs. The system was also validated against a benchmark dataset, and the performance was compared with multiple models used in the literature.

The input features for the proposed model were arranged using RF-based feature importance scores, and they were supplied to a cascaded structure with unique combinations to support efficient decision-making. The knowledge base was further generated with the help of GA, which helped to reduce the number of rules by a considerable level. As a result, the computational complexity of the system was improved. However, future researchers need to work on the multi-collinearity problem, which can be a common issue in forecasting system design with the inclusion of all input features, irrespective of their correlation with the response variable. The authors also used the tuning method for enhancing the performance of the proposed ADFIST system. The main benefit of model tuning is to avoid redundancy in the network, and it will be more useful when the model is utilized with a higher number of IAQ parameters in the future.

Nevertheless, the main limitation of this study was that the forecasting system was not yet integrated into the online portal. However, authors are working on this aspect to develop an all-around expert system in the future. Furthermore, the hardware design and forecasting methodology can be improved to accommodate a higher number of environmental variables. The proposed forecasting approach will also be tested on different field applications to generate smart assessment systems for enhanced living environments. Another limitation of this model is related to the time taken for training (2 hours 37 minutes). It must be improved in the future by optimizing network parameters without affecting the performance of the forecasting system. The efficient integration of hardware and software modules with mobile apps or web portals can present better outcomes for public health management in developed and developing countries. Other than this, the paper is limited to the implementation of FLS type 1 for IAQ forecasting; in future, it is important to experiment with other versions of FLS to understand the impact on system efficiency. Utilization of different versions of FLS systems including Mamdani, Sugeno and Neuro Fuzzy networks can be another important direction for the future work since these methods have proven great efficiency in different research domains over the years. This study can help future researchers to conduct

higher-level analysis while utilizing findings from this analysis as an advantage to scale up their work.

## Author contributions

All authors have read and agreed to the published version of the manuscript.

## CRediT authorship contribution statement

**Jagriti Saini:** Conceptualization, Methodology, Software, Data curation, Writing – review & editing. **Maitreyee Dutta:** Conceptualization, Methodology, Supervision, Validation. **Gonçalo Marques:** Conceptualization, Methodology, Writing – review & editing.

## Declaration of Competing Interest

The authors declare that they have no known competing financial interests or personal relationships that could have appeared to influence the work reported in this paper.

## Data Availability

Data will be made available on request.

*Acknowledgments*

The authors acknowledge the financial support from the Department of Science and Technology (DST), New Delhi, India [Grant No. IF180562], the Specialized Research Fund for Doctoral program under the AORC scheme of the INSPIRE Program.

*Funding*

This research received no external funding.

## References

[1] J.M. Samet, H. Bahrami, K. Berhane, Indoor air pollution and cardiovascular disease: new evidence from Iran, Circulation 133 (2016) 2342–2344, https://doi.org/10.1161/CIRCULATIONAHA.116.023477.
[2] D.A. Collings, S.D. Sithole, K.S. Martin, Indoor woodsmoke pollution causing lower respiratory disease in children, Trop. Doct. 20 (1990) 151–155, https://doi.org/10.1177/004947559002000403.
[3] D. Brook Robert, Sanjay Rajagopalan, Pope C. Arden, R. Brook Jeffrey, Bhatnagar Aruni, V. Diez-Roux Ana, Holguin Fernando, Hong Yuling, V. Luepker Russell, A. Mittleman Murray, Peters Annette, Siscovick David, C. Smith Sidney, Whitsel Laurie, D. Kaufman Joel, Particulate matter air pollution and cardiovascular disease, Circulation 121 (2010) 2331–2378, https://doi.org/10.1161/CIR.0b013e3181dbece1.
[4] N. Bruce, R. Perez-Padilla, R. Albalak, Indoor air pollution in developing countries: a major environmental and public health challenge, Bull. World Health Organ. (2000) 15.
[5] T. Mokalled, J.A. Gérard, M. Abboud, C. Liaud, R. Nasreddine, S.Le Calvé, An assessment of indoor air quality in the maintenance room at Beirut-Rafic Hariri International Airport, Atmos. Pollut. Res. 10 (2019) 701–711.
[6] R.K. Nath, M.F.M. Zain, M. Jamil, An environment-friendly solution for indoor air purification by using renewable photocatalysts in concrete: a review, Renew. Sustain. Energy Rev. 62 (2016) 1184–1194, https://doi.org/10.1016/j.rser.2016.05.018.
[7] E. Duflo, M. Greenstone, R. Hanna, Indoor air pollution, health and economic well-being, S.A.P.I.EN.S. Surveys and Perspectives Integrating Environment and Society. (2008). https://journals.openedition.org/sapiens/130. accessed October 52021.
[8] L. Calderón-Garcidueñas, A. Mora-Tiscareño, E. Ontiveros, G. Gómez-Garza, G. Barragán-Mejía, J. Broadway, S. Chapman, G. Valencia-Salazar, V. Jewells, R. R. Maronpot, C. Henríquez-Roldán, B. Pérez-Guillé, R. Torres-Jardón, L. Herrit, D. Brooks, N. Osnaya-Brizuela, M.E. Monroy, A. González-Maciel, R. Reynoso-Robles, R. Villarreal-Calderon, A.C. Solt, R.W. Engle, Air pollution, cognitive deficits and brain abnormalities: a pilot study with children and dogs, Brain Cogn. 68 (2008) 117–127, https://doi.org/10.1016/j.bandc.2008.04.008.
[9] S. Awasthi, H.A. Glick, R.H. Fletcher, Effect of cooking fuels on respiratory diseases in preschool children in Lucknow, India, Am. J. Trop. Med. Hyg. 55 (1996) 48–51, https://doi.org/10.4269/ajtmh.1996.55.48.
[10] N. Bruce, E. Rehfuess, S. Mehta, G. Hutton, K. Smith, Indoor Air Pollution, in: D.T. Jamison, J.G. Breman, A.R. Measham, G. Alleyne, M. Claeson, D.B. Evans, P. Jha, A. Mills, P. Musgrove, Disease Control Priorities in Developing Countries, 2nd ed., World Bank, Washington (DC), 2006. http://www.ncbi.nlm.nih.gov/books/NBK11760/. accessed March 22022.
[11] K.R. Smith, National burden of disease in India from indoor air pollution, Proc. Natl. Acad. Sci. 97 (2000) 13286–13293, https://doi.org/10.1073/pnas.97.24.13286.
[12] Y.-F. Xing, Y.-H. Xu, M.-H. Shi, Y.-X. Lian, The impact of PM2.5 on the human respiratory system, J. Thorac. Dis. 8 (2016) E69–E74, https://doi.org/10.3978/j.issn.2072-1439.2016.01.19.
[13] S. Feng, D. Gao, F. Liao, F. Zhou, X. Wang, The health effects of ambient PM2.5 and potential mechanisms, Ecotoxicol. Environ. Saf. 128 (2016) 67–74, https://doi.org/10.1016/j.ecoenv.2016.01.030.
[14] A. Asikainen, P. Carrer, S. Kephalopoulos, E. de O Fernandes, P. Wargocki, O. Hänninen, Reducing burden of disease from residential indoor air exposures in Europe (HEALTHVENT project), Environ. Health 15 (S35) (2016), https://doi.org/10.1186/s12940-016-0101-8.
[15] W.J. Fisk, Q. Lei-Gomez, M.J. Mendell, Meta-analyses of the associations of respiratory health effects with dampness and mold in homes, Indoor Air 17 (2007) 284–296, https://doi.org/10.1111/j.1600-0668.2007.00475.x.
[16] American Thoracic Society, HEPA filters reduce cardiovascular health risks associated with air pollution, study finds, Science Daily (2011). https://www.sciencedaily.com/releases/2011/01/110121144009.htm. accessed April 82019.
[17] J. Ahn, D. Shin, K. Kim, J. Yang, Indoor air quality analysis using deep learning with sensor data, Sensors 17 (2017) 2476, https://doi.org/10.3390/s17112476.

[18] Aditya, M. Sharma, S.C. Gupta, An Internet of Things based smart surveillance and monitoring system using arduino, in: 2018 International Conference on Advances in Computing and Communication Engineering (ICACCE), 2018: pp. 428–433. https://doi.org/10.1109/ICACCE.2018.8441725.
[19] J. Adeleke, D. Moodley, G. Rens, A. Adewumi, Integrating statistical machine learning in a semantic sensor web for proactive monitoring and control, Sensors 17 (2017) 807, https://doi.org/10.3390/s17040807.
[20] B. Maag, Z. Zhou, L. Thiele, A survey on sensor calibration in air pollution monitoring deployments, IEEE Internet Things J. 5 (2018) 4857–4870, https://doi.org/10.1109/JIOT.2018.2853660.
[21] L. Spinelle, M. Gerboles, M.G. Villani, M. Aleixandre, F. Bonavitacola, Field calibration of a cluster of low-cost commercially available sensors for air quality monitoring. Part B: NO, CO and CO2, Sens. Actuators B 238 (2017) 706–715, https://doi.org/10.1016/j.snb.2016.07.036.
[22] Y.-C. Lin, S.-J. Lee, C.-S. Ouyang, C.-H. Wu, Air quality prediction by neuro-fuzzy modeling approach, Appl. Soft Comput. 86 (2020), 105898, https://doi.org/10.1016/j.asoc.2019.105898.
[23] R. Espinosa, J. Palma, F. Jiménez, J. Kamińska, G. Sciavicco, E. Lucena-Sánchez, A time series forecasting based multi-criteria methodology for air quality prediction, Appl. Soft Comput. 113 (2021), 107850, https://doi.org/10.1016/j.asoc.2021.107850.
[24] S. Du, T. Li, Y. Yang, S.-J. Horng, Deep air quality forecasting using hybrid deep learning framework, IEEE Trans. Knowl. Data Eng. 33 (2021) 2412–2424, https://doi.org/10.1109/TKDE.2019.2954510.
[25] A. Aggarwal, T. Choudhary, P. Kumar, A fuzzy interface system for determining Air Quality Index, in: 2017 International Conference on Infocom Technologies and Unmanned Systems (Trends and Future Directions) (ICTUS), 2017: pp. 786–790. https://doi.org/10.1109/ICTUS.2017.8286113.
[26] M.N. Assimakopoulos, A. Dounis, A. Spanou, M. Santamouris, Indoor air quality in a metropolitan area metro using fuzzy logic assessment system, Sci. Total Environ. 449 (2013) 461–469, https://doi.org/10.1016/j.scitotenv.2012.12.043.
[27] P. Singhala, D. Shah, B. Patel, Temperature Control using Fuzzy Logic, ArXiv:1402.3654 [Cs]. (2014). http://arxiv.org/abs/1402.3654 (accessed March 2, 2022).
[28] D.Z. Antanasijević, V.V. Pocajt, D.S. Povrenović, M.Đ. Ristić, A.A. Perić-Grujić, PM10 emission forecasting using artificial neural networks and genetic algorithm input variable optimization, Sci. Total Environ. 443 (2013) 511–519, https://doi.org/10.1016/j.scitotenv.2012.10.110.
[29] F.S. de Albuquerque Filho, F. Madeiro, S.M.M. Fernandes, P.S.G. de Mattos Neto, T.A.E. Ferreira, Time-series forecasting of pollutant concentration levels using particle swarm optimization and artificial neural networks, Química Nova 36 (2013) 783–789, https://doi.org/10.1590/S0100-40422013000600007.
[30] M.M. Dedovic, S. Avdakovic, I. Turkovic, N. Dautbasic, T. Konjic, Forecasting PM10 concentrations using neural networks and system for improving air quality. 2016 XI International Symposium on Telecommunications (BIHTEL), IEEE, Sarajevo, Bosnia and Herzegovina, 2016, pp. 1–6, https://doi.org/10.1109/BIHTEL.2016.7775721.
[31] L. Hrust, Z.B. Klaić, J. Križan, O. Antonić, P. Hercog, Neural network forecasting of air pollutants hourly concentrations using optimised temporal averages of meteorological variables and pollutant concentrations, Atmos. Environ. 43 (2009) 5588–5596, https://doi.org/10.1016/j.atmosenv.2009.07.048.
[32] J. Saini, M. Dutta, G. Marques, A comprehensive review on indoor air quality monitoring systems for enhanced public health, Environ Res. 30 (6) (2020), https://doi.org/10.1186/s42834-020-0047-y.
[33] J. Saini, M. Dutta, G. Marques, Indoor air quality prediction systems for smart environments: A systematic review, AIS 12 (2020) 433–453, https://doi.org/10.3233/AIS-200574.
[34] D. Bozanic, D. Tešić, D. Marinković, A. Milić, Modeling of neuro-fuzzy system as a support in decision-making processes, Rep. Mechan. Eng. 2 (2021) 222–234, https://doi.org/10.31181/rme2001021222b.
[35] R.-E. Precup, S. Preitl, E. Petriu, C.-A. Bojan-Dragos, A.-I. Szedlak-Stinean, R.-C. Roman, E.-L. Hedrea, Model-based fuzzy control results for networked control systems, Rep. Mechan. Eng. 1 (2020) 10–25, https://doi.org/10.31181/rme200101010p.
[36] W.-T. Tsai, Overview of Green Building Material (GBM) policies and guidelines with relevance to indoor air quality management in Taiwan, Environments 5 (4) (2017), https://doi.org/10.3390/environments5010004.
[37] A. Kankaria, B. Nongkynrih, S.K. Gupta, Indoor air pollution in India: implications on health and its control, Indian J. Commun. Med. 39 (2014) 203–207, https://doi.org/10.4103/0970-0218.143019.
[38] UCI Machine Learning Repository: Beijing multi-site air-quality data data set, (n.d.). https://archive.ics.uci.edu/ml/datasets/Beijing+Multi-Site+Air-Quality+Data (accessed March 27, 2022).
[39] C. Fan, M. Chen, X. Wang, J. Wang, B. Huang, A review on data preprocessing techniques toward efficient and reliable knowledge discovery from building operational data, Front. Energy Res. 9 (2021). https://www.frontiersin.org/article/10.3389/fenrg.2021.652801. accessed March 28, 2022.
[40] H.P. Vinutha, B. Poornima, B.M. Sagar, Detection of outliers using interquartile range technique from intrusion dataset, Eds, in: S.C. Satapathy, J.M.R.S. Tavares, V. Bhateja, J.R. Mohanty (Eds.), Information and Decision Sciences, Springer, Singapore, 2018, pp. 511–518, https://doi.org/10.1007/978-981-10-7563-6_53.
[41] J. Sim, J.S. Lee, O. Kwon, Missing values and optimal selection of an imputation method and classification algorithm to improve the accuracy of ubiquitous computing applications, Math. Probl. Eng. 2015 (2015), e538613, https://doi.org/10.1155/2015/538613.
[42] Y. He, Missing data analysis using multiple imputation: getting to the heart of the matter, Circ. Cardiovasc. Qual. Outcomes 3 (2010) 98, https://doi.org/10.1161/CIRCOUTCOMES.109.875658.
[43] J. Bernhardt, A.M. Carleton, C. LaMagna, A comparison of daily temperature-averaging methods: spatial variability and recent change for the CONUS, J. Climate 31 (2018) 979–996, https://doi.org/10.1175/JCLI-D-17-0089.1.
[44] L. Breiman, Random forests, Int. J. Mach. Learn. Cybern. 45 (2001) 5–32, https://doi.org/10.1023/A:1010933404324.
[45] J. Saini, M. Dutta, G. Marques, ADFIST: adaptive dynamic fuzzy inference system tree driven by optimized knowledge base for indoor air quality assessment, Sensors 22 (2022) 1008, https://doi.org/10.3390/s22031008.
[46] J. Saini, M. Dutta, G. Marques, Fuzzy inference system tree with particle swarm optimization and genetic algorithm: a novel approach for PM10 forecasting, expert systems with applications. 183 (2021) 115376. https://doi.org/10.1016/j.eswa.2021.115376.
[47] M. Collotta, G. Pau, V. Maniscalco, A fuzzy logic approach by using particle swarm optimization for effective energy management in IWSNs, IEEE Trans. Ind. Electron 64 (2017) 9496–9506, https://doi.org/10.1109/TIE.2017.2711548.
[48] Fuzzy Logic Toolbox User's Guide, (2021). www.mathworks.com/help/pdf_doc/gads/gads_tb.pdf.
[49] J.J. Carbajal-Hernández, L.P. Sánchez-Fernández, J.A. Carrasco-Ochoa, J.Fco. Martínez-Trinidad, Assessment and prediction of air quality using fuzzy logic and autoregressive models, Atmos. Environ. 60 (2012) 37–50, https://doi.org/10.1016/j.atmosenv.2012.06.004.
[50] D. Zimwara, L. Mugwagwa, K. Nherera, Soft computing methods for predicting environmental quality: a case study of the Zimbabwe sugar processing industry, (n.d.) 13.
[51] C. Katushabe, S. Kumaran, E. Masabo, Fuzzy based prediction model for air quality monitoring for Kampala City in East Africa, ASI 4 (2021) 44, https://doi.org/10.3390/asi4030044.
[52] M. Mohammadian, R.J. Stonier, Tuning and optimisation of membership functions of fuzzy logic controllers by genetic algorithms, in: Proceedings of 1994 3rd IEEE International Workshop on Robot and Human Communication, IEEE, Nagoya, Japan, 1994, pp. 356–361, https://doi.org/10.1109/ROMAN.1994.365903.
[53] K.A. Crockett, Z. Bandar, J. Fowdar, J. O'Shea, Genetic tuning of fuzzy inference within fuzzy classifier systems, Expert Syst. 23 (2006) 63–82, https://doi.org/10.1111/j.1468-0394.2006.00325.x.
[54] C. Karr, Genetic algorithms for fuzzy controllers, AI Expert 6 (1991) 26–33.
[55] E. Baeyens, A. Herreros, J. Perán, A direct search algorithm for global optimization, Algorithms 9 (2016) 40, https://doi.org/10.3390/a9020040.
[56] I.N.K. Wardana, J.W. Gardner, S. Fahmy, Optimising deep learning at the edge for accurate hourly air quality prediction, Sensors 21 (2021) 1064, https://doi.org/10.3390/s21041064.